2015

(english) spare parts catalog

MY2015 Spare Parts Catalog

SRAM®

SRAM® ORIGINAL PARTS

CAUTION:

The SRAM Warranty policy does not cover damages caused by the use of non-SRAM parts.

Use only SRAM parts with SRAM components.

Installation of parts and accessories not originally intended could result in less than optimal performance and/or injury.

For in-depth service information on SRAM products, refer to our website at www.sram.com/service. Contact your local SRAM distributor or dealer for ordering information.

Information contained in this publication is subject to change at any time without prior notice. Your product's appearance may vary from the diagrams contained in this catalog.

Copyright© 2014 SRAM LLC

Information may be enhanced without prior notice.

Rev A, Released August 2014

Material printed herein is intended for the use of SRAM distributors only. All information concerning price is confidential.

TABLE OF CONTENTS

REAR DERAILLEURS - ROAD
6 Red 22
7 Red 2013
8 Red
9 Force 22 / Rival 22
10 Force / Rival / Apex

FRONT DERAILLEURS - ROAD
11 Red 22 / Red 2013 Force 22
12 Red
13 Force / Rival / Apex

SHIFTERS / LEVERS - ROAD
14 HRD/HRR Red 22 / Force 22 / CX1 / Rival 22 / 700
15 Red 22 / 2013
16 Red
17 Force 22 / Rival 22
18 Force / Rival / Apex
19 DoubleTap® Road Trigger Shifter
20 Time Trial Brake Lever
21 Time Trial Shifter

BRAKE CALIPERS - ROAD
22 Red 22 / Force 22 / CX1
Rival 22 / 700 HRD/HRR Calipers
23 Red 2013
24 Red
25 Force / Rival / Apex

CRANKS - ROAD
26 Red 22 / Red 2013 / Red / Force 22 / Force/ Rival
Apex / 100 / 300 / 500 / 550 / 800 / 900 / 950

SPIDER / CASSETTES / BOTTOM BRACKET - ROAD
28 PG 1050 / OG 1070 / OG 1090 / XG 1090

WHEELS - ROAD
29 Spokes/Nipples/Hubs
29 Freehub Bodies
29 Decals
29 Tools

HUBS - MTB
30-33 406 / 506 / X7 / X9
34 X0
35 PREDICTIVE STEERING

WHEELS - MTB
36/37 RISE 40/60
38/39 RISE XX
40/41 ROAM 30/40
42/43 ROAM 50/60
44/45 RAIL 50

REAR DERAILLEURS - MTB
46 XX1 / X01
47 XX (2010-2012) 2x10
48 X0 / X9 / X7 TYPE 2 2x10
49 X0 / X9 / X7 (2011-2012) 2x10, 3x10 / ViaGT
50 X0 (2006-2009) 3x9
51 X9 / X7 (2010) 3x9
52 X9 (2007-2009) 3x9
53 X9 / X7 DualDrive 27 (2005-2006) 3x9
54 X7 (2007-2009) 3x9
55 X9 / SRAM X7 (-2004) 3x9
56 9.0SL / 9.0 / 7.0 / 5.0 / DualDrive 27 (-2004)
57 X5 / X4 (2008-2009)

FRONT DERAILLEURS - MTB
58 XX 2x10
59 X0 / X9 ViaGT 2x10, 3x10
60 X9 3x9
61 X5 / X7 / X-Gen

TRIGGER SHIFTERS - MTB
62 XX1 / X01
63 XX 2x10
64 X0 / X9 / X7 B1
65 X0 2x10, 3x10
66 X0 3x9
67 X9 / X7 / X5 2x10, 3x10, ViaGT
68 X9 (2007-2010) 3x9 NEW 3X10
69 X7 (2010) 3x9 NEW 3X10
70 X7 (2007-2009) / X9 (2006) 3x9
71 X9 (2005) / X7 (2005-2006) / X5 / X-Gen (08-09) 3x9
72 X4 / SX4 / TRX

TWIST SHIFTERS - MTB
73 XX1 / X01 / XX / X0 Grip Shift
74 X0 / X9 / X7
75 5.0 / Centera
76 3.0 Comp / 3.0 / MRX Comp / MRX

CRANK / CHAINRINGS
77 XX1 / XX / X01 Crank, Chainrings, Cassette
78 Truvativ X0 Chain Gudes
79 Truvativ 2x10 X-Guides
80 X0 / X9 / X7 ViaGT Crank, Chainrings, Cassette, BB
81 2x10, 3x10 X01/XX1

DISC BRAKES - LEVERS AND CALIPERS
80-84 GUIDE RSC/RS/R
85-87 XX
88-90 X0
91-92 DB5
93-98 ROTORS / MOUNTING HARDWARE / CLAMPS
BLEED KITS / TOOLS / FLUID/ GREASE

SRAM RED 22 - REAR DERAILLEUR

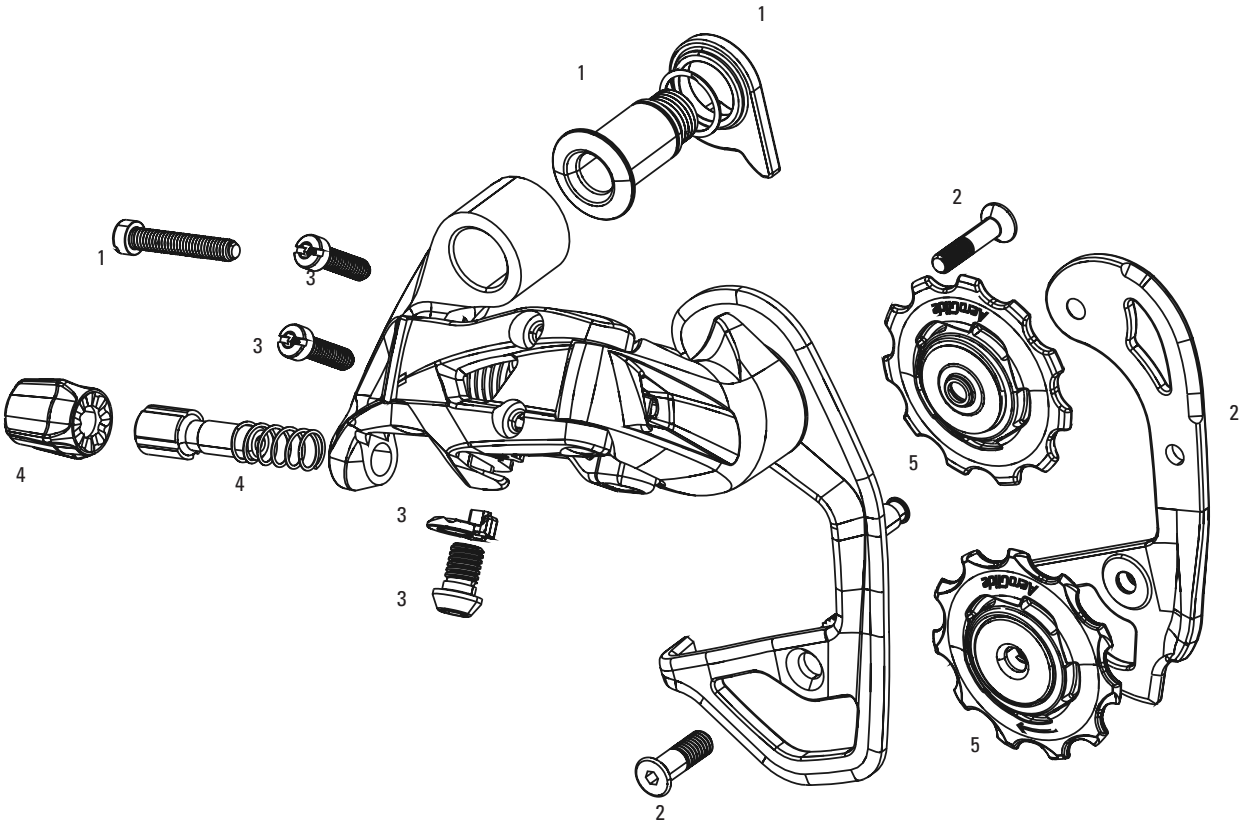

No.	Part Number	Description
1	11.7518.020.000	Red22 Rear Derailleur B-Bolt/B-Screw
2	11.7518.013.001	Red 13/22 Rear Derailleur Inner Cage with Mounting Bolts
2	11.7518.013.002	Red 13/22 Rear Derailleur Medium Inner Cage with Mounting Bolts
3	11.7518.001.000	Red 13/22 Aero Glide Rear Derailleur Cable Anchor/Limit Screw
4	11.7518.002.000	Red 13/22 Force22 Aero Glide Rear Derailleur Barrel Adjuster
5	00.7518.014.000	BlackBox Ceramic Bearing Pulleys – AeroGlide Road

SRAM RED 2013 - REAR DERAILLEUR

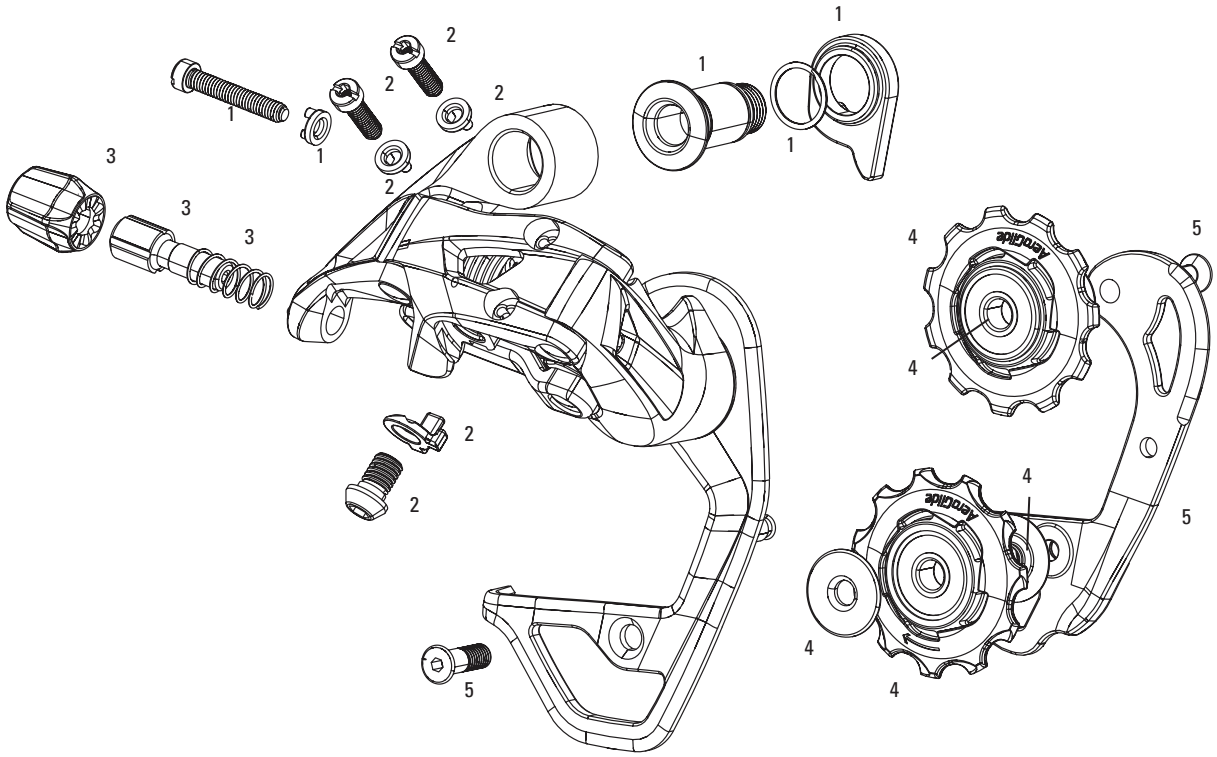

No.	Part Number	Description
1	11.7518.000.000	Red 13 Aero Glide Rear Derailleur B-Bolt/B-Screw
2	11.7518.001.000	Red 13/22 Aero Glide Rear Derailleur Cable Anchor/Limit Screw
3	11.7518.002.000	Red 13/22 Force22 Aero Glide Rear Derailleur Barrel Adjuster
4	00.7518.014.000	BlackBox Ceramic Bearing Pulleys – AeroGlide Road
5	11.7518.013.001	Red 13/22 Rear Derailleur Inner Cage with Mounting Bolts
5	11.7518.013.002	Red 13/22 Rear Derailleur Medium Inner Cage with Mounting Bolts

SRAM RED - REAR DERAILLEUR (2008-2011)

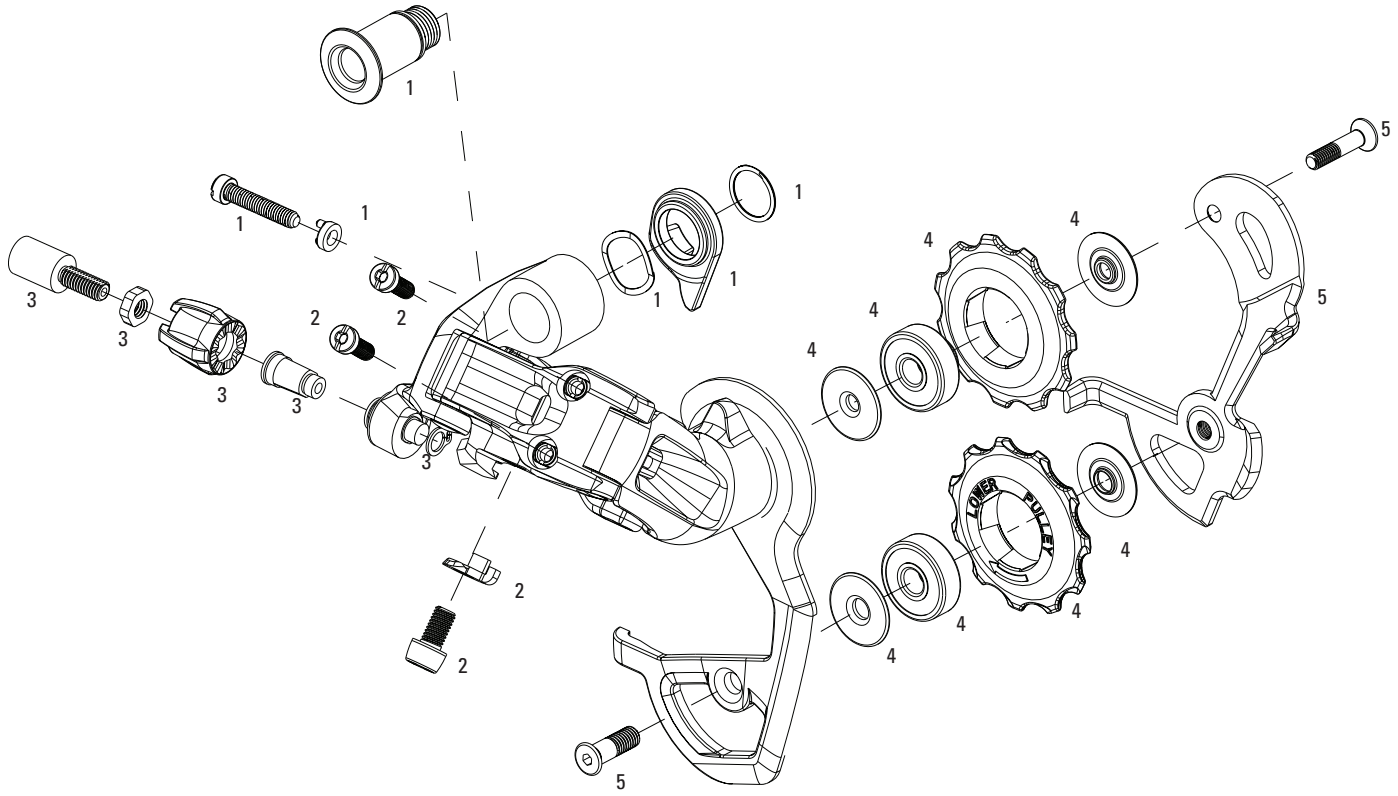

No.	Part Number	Description
1	11.7515.016.000	Red Rear Derailleur B-Bolt Kit
1	11.7515.068.000	Red Black Rear Derailleur B-Bolt Kit
2	11.7515.017.000	Red Rear Derailleur Cable Anchor/Limit Screw
2	11.7515.069.000	Red Black Rear Derailleur Cable Anchor/Limit Screw
3	11.7515.018.000	Red Rear Derailleur Barrel Adjuster Kit
3	11.7515.070.000	Red Black Rear Derailleur Barrel Adjuster Kit
4	00.7518.014.000	BlackBox Ceramic Bearing Pulleys – AeroGlide Road
ns	11.7515.034.000	Rear Derailleur Limit Screw Plugs Qty 10 (Red, Force, Rival, X-0)
5	11.7518.013.000	Red Rear Derailleur Inner Cage with Mounting Bolts

SRAM FORCE 22 / RIVAL 22 - REAR DERAILLEUR

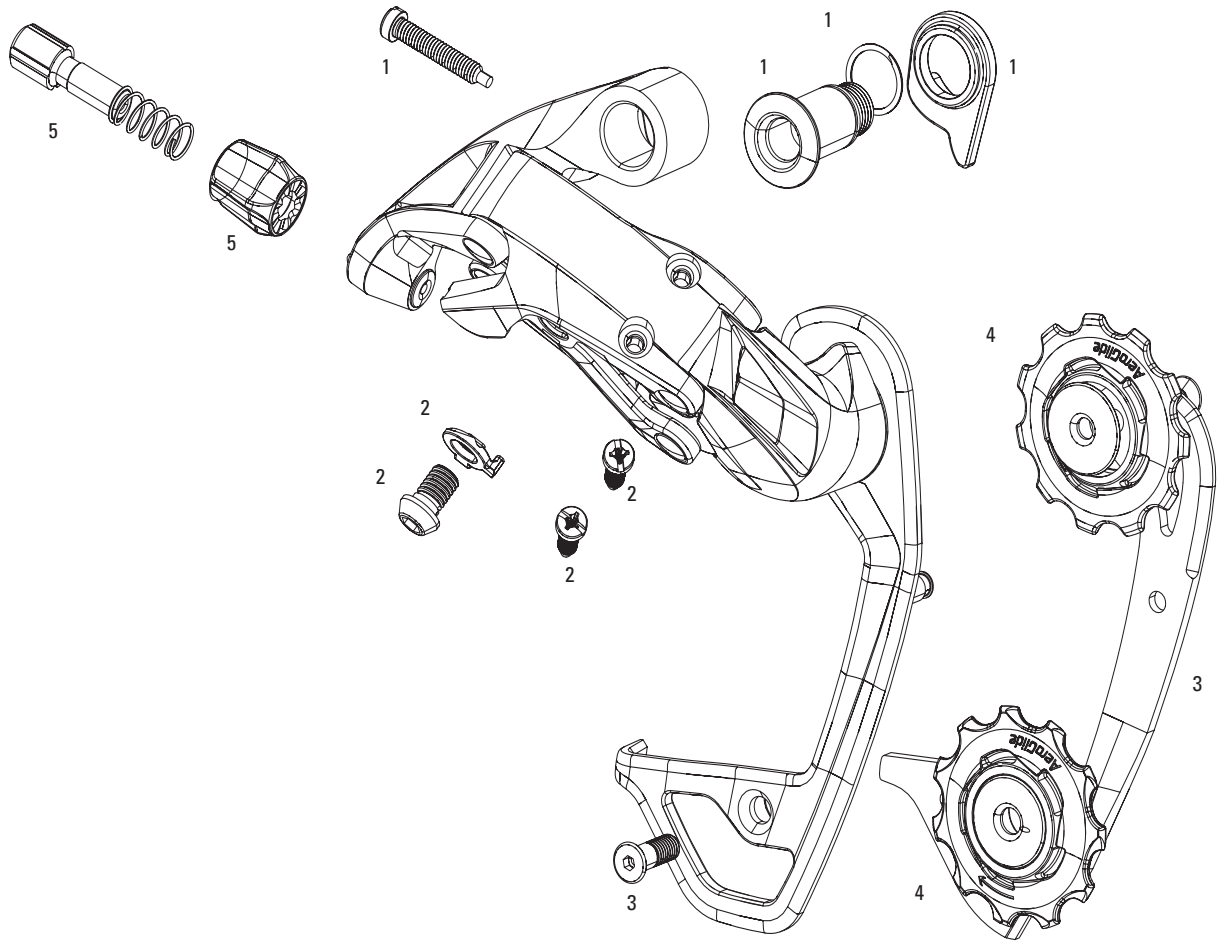

No.	Part Number	Description
1	11.7518.021.000	Force22 Rear Derailleur B-Bolt/B-Screw
1	11.7518.039.000	Force CX1 Rear Derailleur B-Bolt Kit
2	11.7518.023.000	Force22 Rear Derailleur Cable Anchor/Limit Screws
2	11.7518.035.000	Rival22 Cable Anchor and Limit Screws
3	11.7518.025.000	Force22 Rear Derailleur Inner Cage with Mounting Bolts
3	11.7518.025.001	Force22 Rear Derailleur Medium Inner Cage with Mounting Bolts
3	11.7518.036.000	Rival22 Pulleys and Inner Cage - Medium
4	11.7518.026.000	Force22/Rival22 Rear Derailleur Pulley Kit
5	11.7518.002.000	Red 13/22 Force22 Aero Glide Rear Derailleur Barrel Adjuster
5	11.7518.038.000	Rival22 Rear Derailleur Barrel Adjuster

SRAM FORCE / SRAM RIVAL / SRAM APEX - REAR DERAILLEUR (2007-2012)

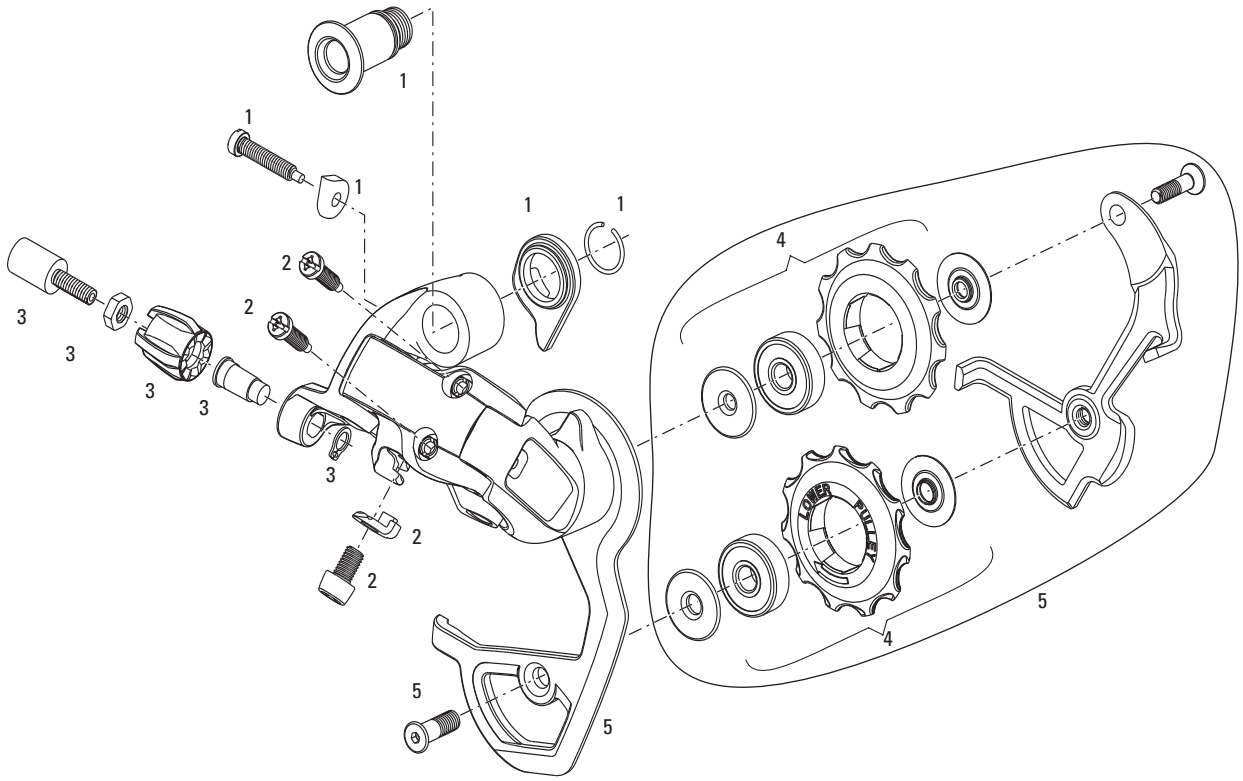

No.	Part Number	Description
1	11.7515.035.000	Apex/Rival/Force Rear Derailleur B-Bolt Kit
1	11.7518.009.000	Rival/Apex Medium Cage Rear Derailleur B-Bolt Kit
2	11.7515.001.000	Rival Rear Derailleur Cable Anchor/Limit Screw
2	11.7515.061.000	Force Rear Derailleur Cable Anchor/Limit Screw
2	11.7515.046.000	11 Rear Derailleur Rival Medium / Apex Cable Limit Kit
3	11.7515.005.000	Apex/Rival/Force Rear Derailleur Barrel Adjuster Kit
4	11.7515.060.000	Force Rival Apex Rear Derailleur Pulley Kit
5	11.7515.059.000	Apex Short Rear Derailleur Cage/Pulley Complete Kit
5	11.7515.059.010	Apex Medium Rear Derailleur Cage/Pulley Complete Kit
5	11.7515.033.020	Rival Rear Derailleur Cage/Pulley Complete Kit Blk
5	11.7515.033.040	Rival Medium Rear Derailleur Cage/Pulley Complete Kit
5	11.7515.033.030	2010 Force Rear Derailleur Cage/Pulley Complete Kit
5	11.7515.033.050	Force Medium Rear Derailleur Cage/Pulley Complete Kit
ns	11.7515.034.000	Rear Derailleur Limit Screw Plugs Qty 10 (Red, Force, Rival,X-0)

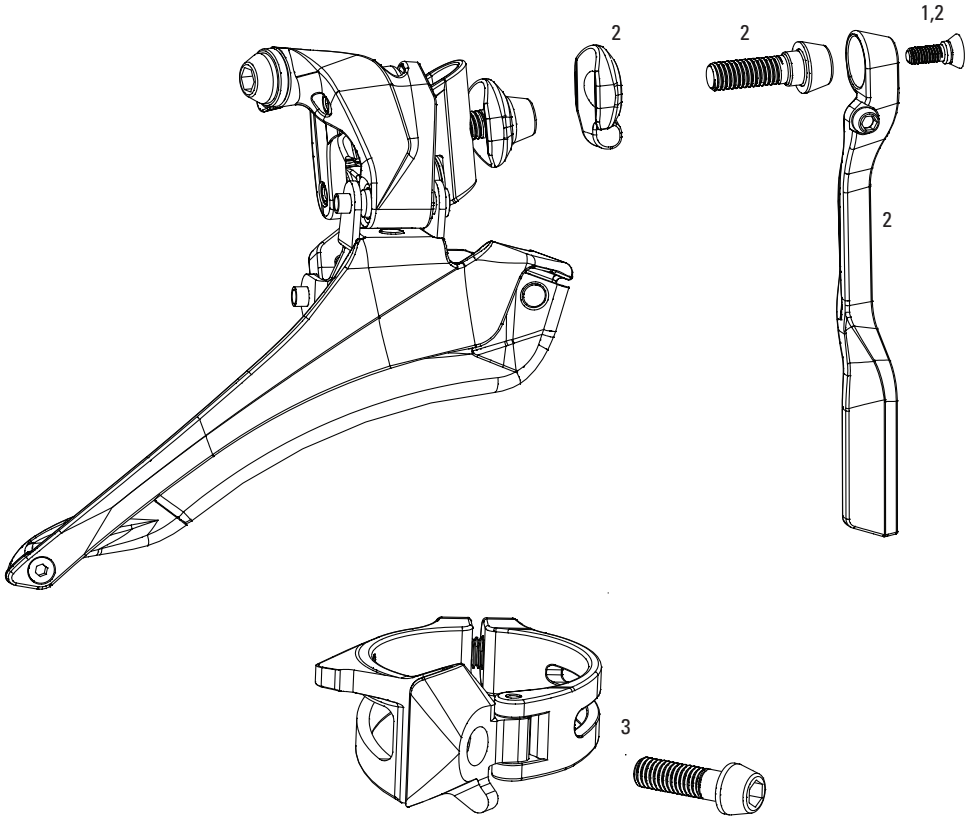

No.	Part Number	Description
1	11.7618.003.000	Chainspotter Attaching Bolt qty 1
2	00.7618.013.000	Front Derailleur Chain Spotter with Washer
3	11.7618.000.000	Braze-on Adaptor Red 34.9 with Chainspotter Stop Black
3	11.7618.000.001	Braze-on Adaptor Red 31.8 with Chainspotter Stop Black

SRAM RED - FRONT DERAILLEUR (2008-2011)

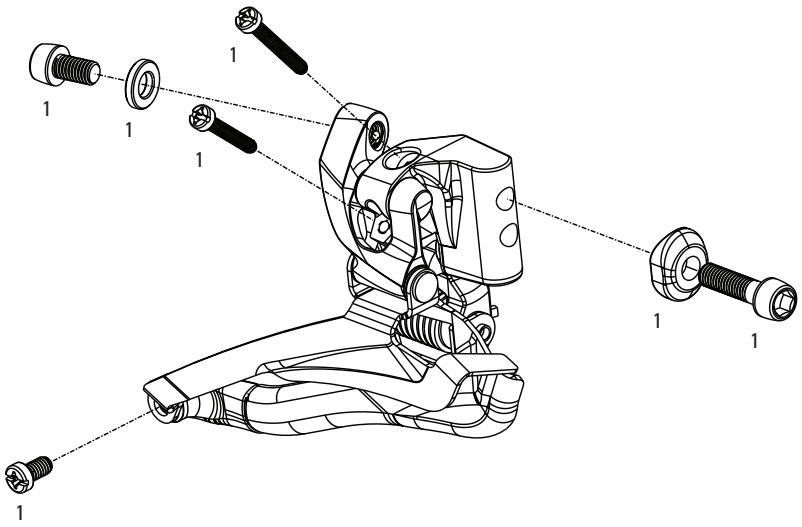

No.	Part Number	Description
1	11.7615.013.000	Red Front Derailleur Spare Parts Kit
1	11.7615.013.010	Red Black Front Derailleur Spare Parts Kit

SRAM FORCE / SRAM RIVAL / SRAM APEX - FRONT DERAILLEUR (2007-2012)

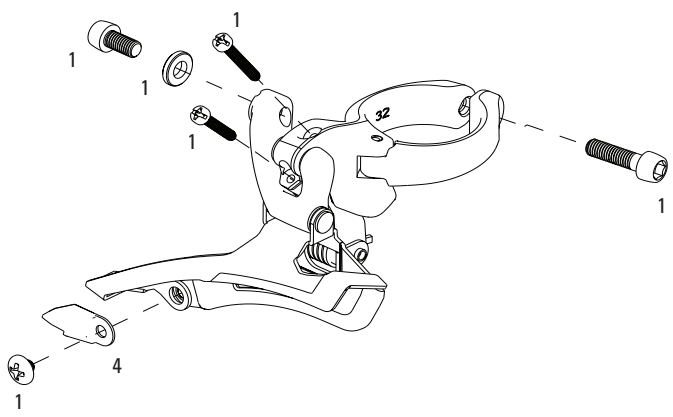

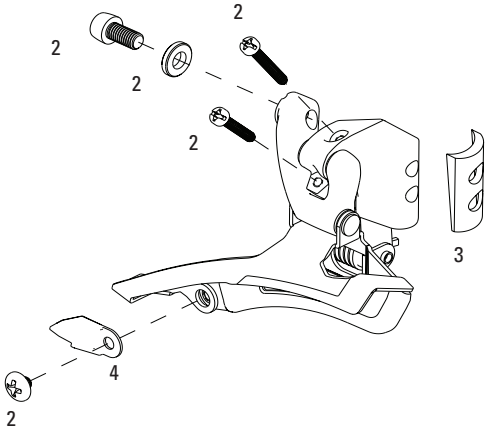

No.	Part Number	Description
1	11.7615.000.000	Apex/Rival/Force Front Derailleur Bolt/Screw Kit (Clamp)
2	11.7615.003.000	Apex/Rival/Force Front Derailleur Bolt/Screw Kit (Braze)
3	11.7615.011.000	Rival/Force Slanted Adjusment Washer Front Derailleur Braze Qty 1
4	11.7615.009.000	Rival/Force Front Derailleur Chainguide, Cage, Qty 1

SRAM RED 22 B1 / FORCE 22 / RIVAL 22 / 700 B1 - HRD / HRR - SHIFTERS / LEVERS

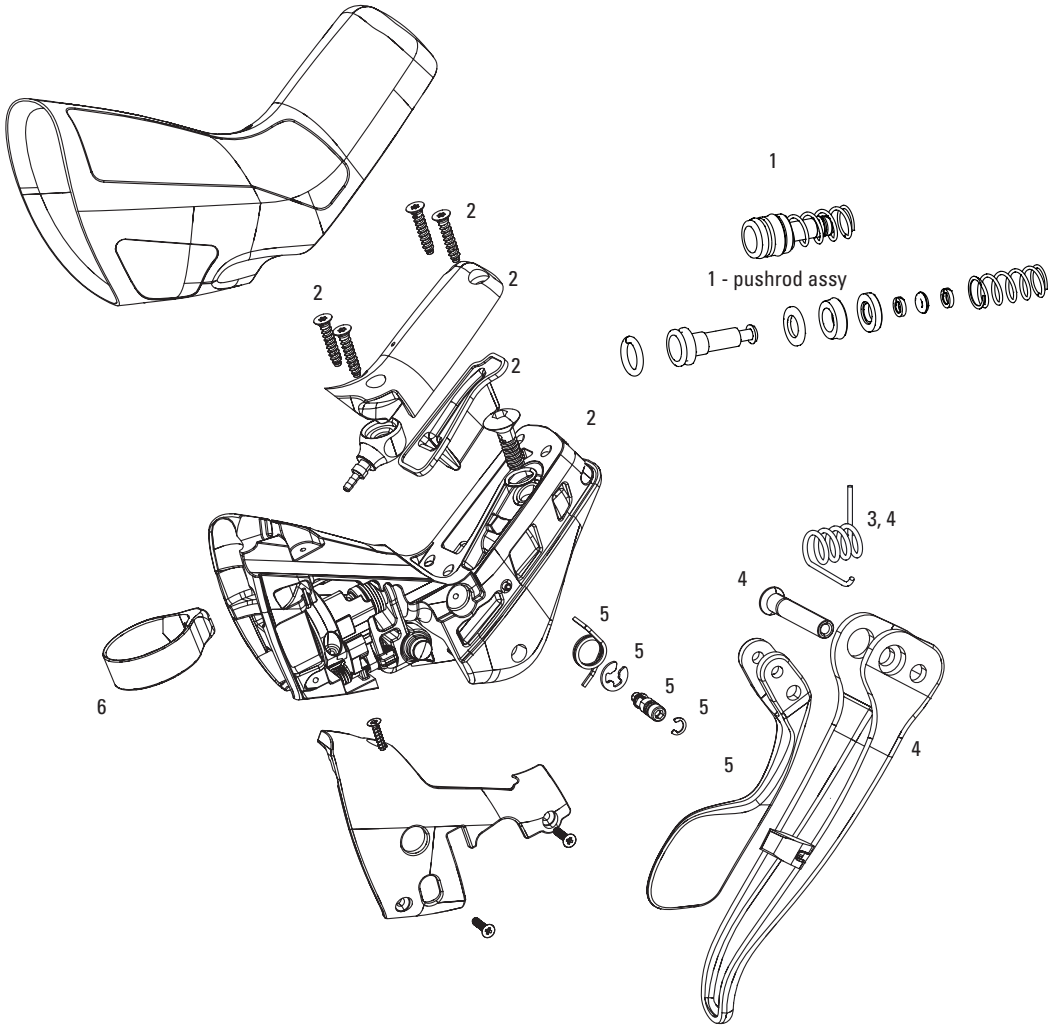

No.	Part Number	Description
1	11.7018.036.000	HRD/HRR Shift Lever Pushrod Assembly and Bleed Screw 1 lever
2	11.7018.037.000	HRD/HRR Shift Lever Front Reservoir Cap/Bladder Kit with Screws and Bleed Plug Qty1
2	11.7018.037.001	HRD/HRR Shift Lever Rear Reservoir Cap/Bladder Kit with Screws and Bleed Plug Qty1
3	11.7018.031.000	RED22/700 Hydraulic Lever Bias Spring Kit Left and Right
4	11.7018.038.000	Red22 B1 Hydraulic ErgoDynamic Brake Lever Assembly Right
4	11.7018.038.001	Red22 B1 Hydraulic ErgoDynamic Brake Lever Assembly Left
4	11.7018.038.002	Force22 Hydraulic ErgoDynamic Brake Lever Assembly Right
4	11.7018.038.003	Force22 Hydraulic ErgoDynamic Brake Lever Assembly Left
4	11.7018.038.004	Rival22 Hydraulic ErgoDynamic Brake Lever Assembly Right
4	11.7018.038.005	Rival22 Hydraulic ErgoDynamic Brake Lever Assembly Left
4	11.7018.038.006	700 B1 Hydraulc Brake Lever Assembly Right
4	11.7018.038.007	700 B1 Hydraulic Brake Lever Assembly Left
4	11.5118.006.001	Force CX1 Hydraulc Brake Lever Assembly Left
5	11.7018.042.000	Red22 B1 Hydraulic Shift Lever Assembly Right
5	11.7018.042.001	Red22 B1 Hydraulic Shift Lever Assembly Left
5	11.7018.042.002	Force22 Hydraulic Shift Lever Assembly Right
5	11.7018.042.003	Force22 Hydraulic Shift Lever Assembly Left
5	11.7018.042.004	Rival22 Hydraulic Shift Lever Assembly Right
5	11.7018.042.005	Rival22 Hydraulic Shift Lever Assembly Left
5	11.7018.042.006	700 B1 Hydraulc Shift Lever Assembly Right
5	11.7018.042.007	700 B1 Hydraulic Shift Lever Assembly Left
6	11.7018.002.000	Red 13/22/Force22/Rival22/700 ErgoDynamic and Hydraulic Road Shifter Clamp Kit Pair

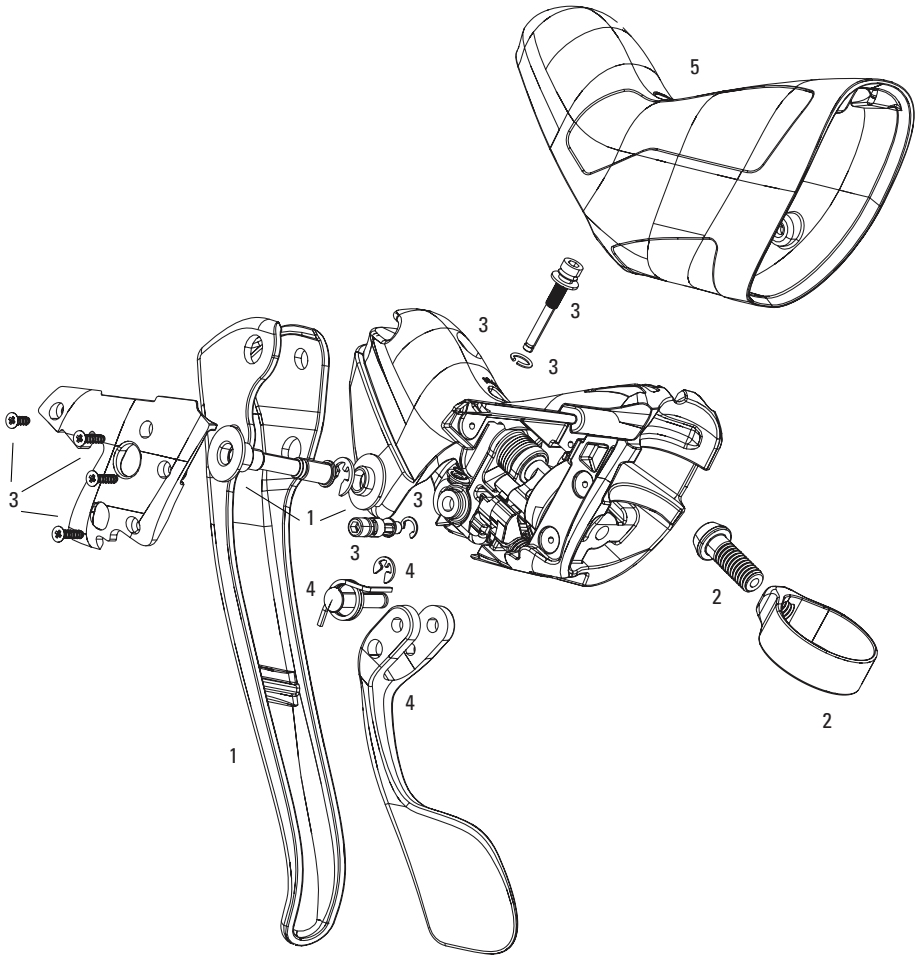

No.	Part Number	Description
1	11.7018.001.000	Red 13/22 ErgoDymanic Brake Lever Assembly Right
1	11.7018.001.001	Red 13/22 ErgoDymanic Brake Lever Assembly Left
2	11.7018.002.000	Red 13/22/Force22/Rival22/700 ErgoDynamic and Hydraulic Road Shifter Clamp Kit Pair
3	11.7018.004.000	Red 13 ErgoDymanic Shifter Body Assembly Right
3	11.7018.004.001	Red 13 ErgoDymanic Shifter Body Assembly Left
4	11.7018.005.000	Red 13/22 ErgoDymanic Shift Lever Assembly Right
4	11.7018.005.001	Red 13/22 ErgoDymanic Shift Lever Assembly Left
5	00.7918.010.000	Hoods for 2013 Red Levers Black, Pair
5	00.7918.010.001	Hoods for 2013 Red Levers White, Pair
5	00.7918.010.002	Hoods for 2013 Red Levers Red, Pair

SRAM RED - SHIFTERS / LEVERS (2008-2011)

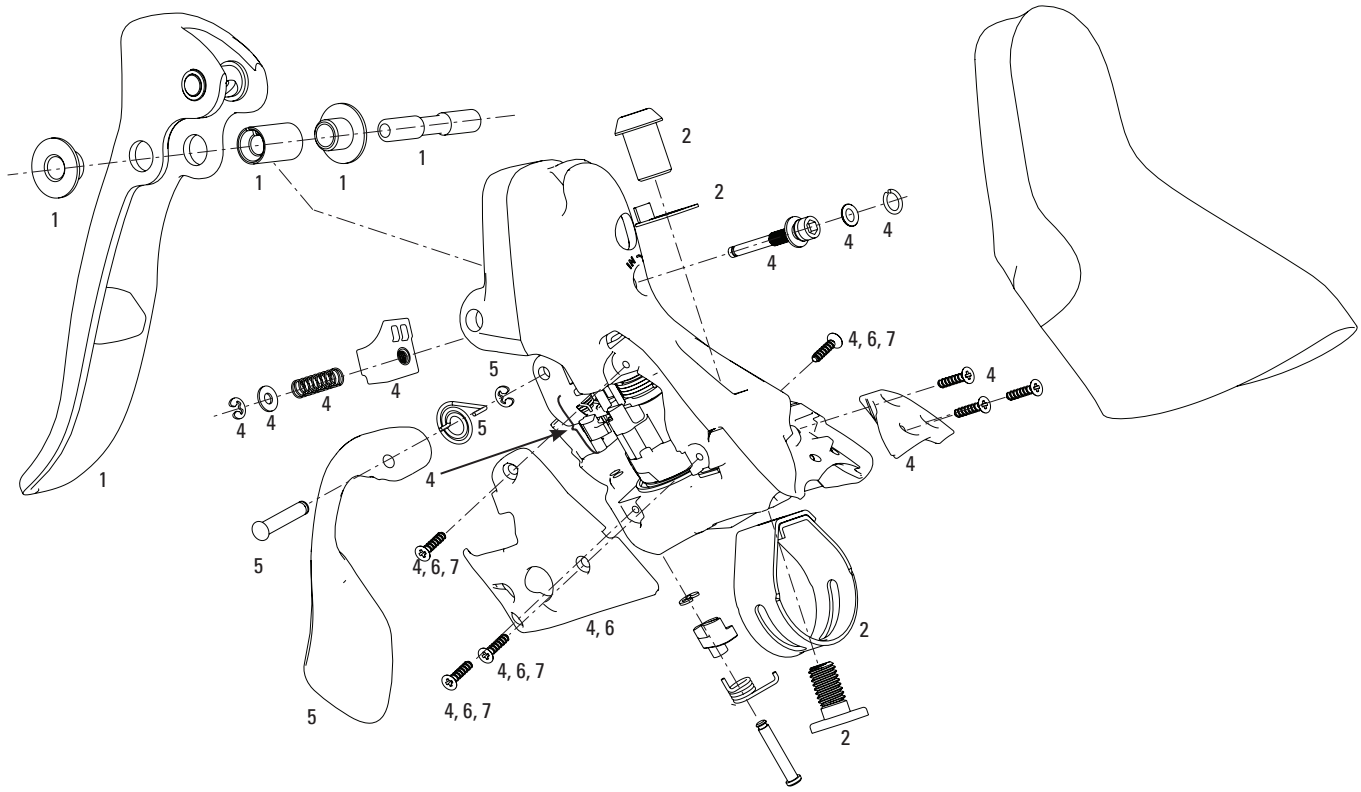

No.	Part Number	Description
1	11.5215.026.000	Red Brake Lever Assy Kit, Left
1	11.5215.026.010	Red Brake Lever Assy Kit, Right
2	11.7015.050.000	09-11 Road Shifter Clamp Kit, Pair
4	11.7015.039.000	Red Shifter Body Assy Left
4	11.7015.039.010	Red Shifter Body Assy Right
5	11.7015.040.000	Red Shifter Lever Assy Left
5	11.7015.040.010	Red Shifter Lever Assy Right
ns	11.7015.065.000	Shifter Spring, Right, RED (Qty 5)
ns	11.7015.065.010	Shifter Spring, Left, RED (Qty 5)

SRAM FORCE 22 - SHIFTERS / LEVERS

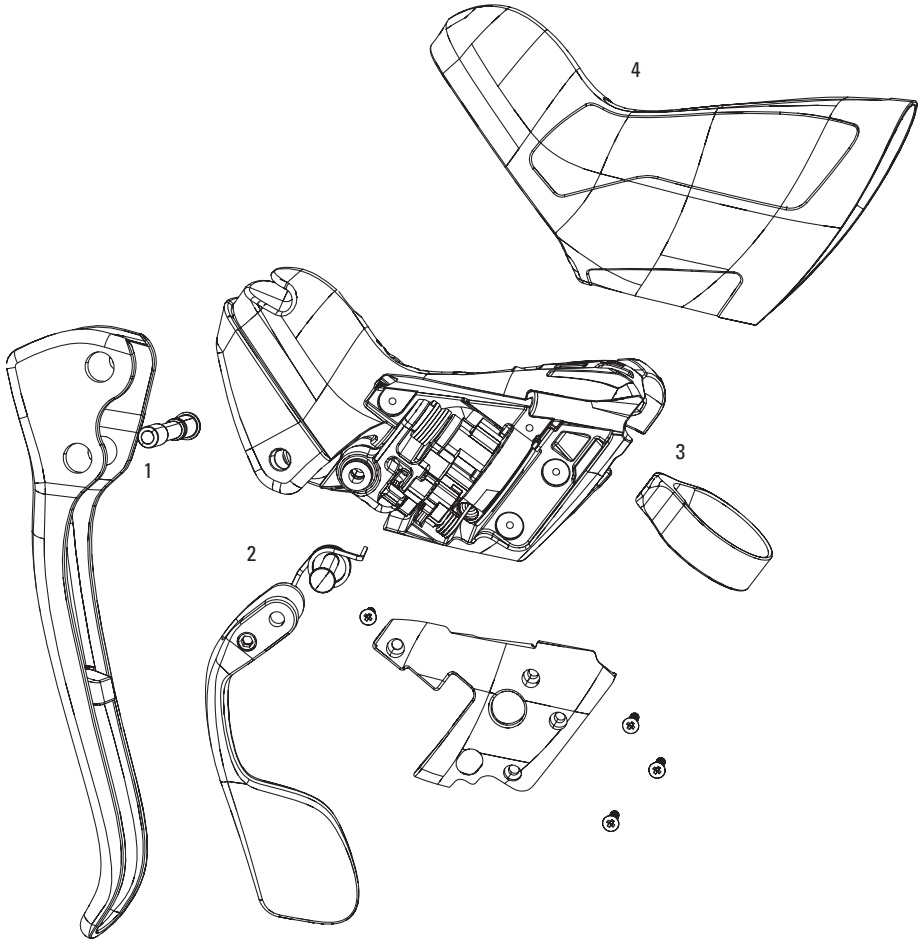

No.	Part Number	Description
1	11.7018.022.000	Force22 Brake Lever Assy Kit Left
1	11.7018.022.001	Force22 Brake Lever Assy Kit Right
2	11.7018.023.000	Force22 Shift Lever Assy Kit Left
2	11.7018.023.001	Force22 Shift Lever Assy Kit Right
3	11.7018.002.000	Red 13/22/Force22/Rival22/700 ErgoDynamic and Hydraulic Road Shifter Clamp Kit Pair
4	00.7918.010.000	Hoods for 2013 Red Levers Black, Pair
4	00.7918.010.001	Hoods for 2013 Red Levers White, Pair
4	00.7918.010.002	Hoods for 2013 Red Levers Red, Pair

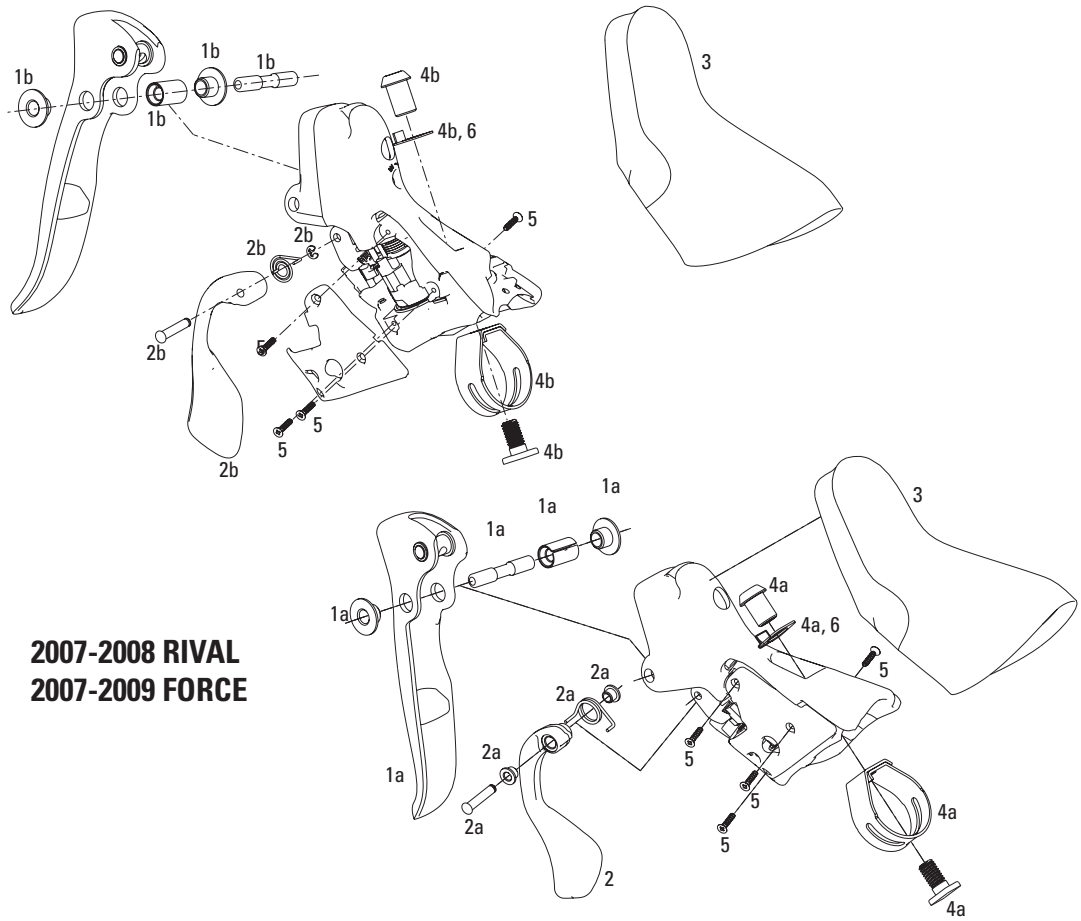

2007-2008 RIVAL
2007-2009 FORCE

No.	Part Number	Description
1a	11.7015.052.080	2010 Force Brake Lever Assy Kit Left
1b	11.7015.052.090	2010 Force Brake Lever Assy Kit Right
1a	11.7015.052.000	11 Rival Brake Lever Assy Kit, Left
1b	11.7015.052.010	11 Rival Brake Lever Assy Kit, Right
2a	11.7015.052.100	2010 Force Shift Lever Assy Kit Left
2b	11.7015.052.110	2010 Force Shift Lever Assy Kit Right
2a	11.7015.052.040	09-11 Apex/Rival Shift Lever Assy Kit, Left
2b	11.7015.052.050	09-11 Apex/Rival Shift Lever Assy Kit, Right
3	00.7915.042.000	Hoods for Doubletap Levers Black, Pair
3	00.7915.042.010	Hoods for Doubletap Levers White, Pair
3	00.7915.042.020	Hoods for Doubletap Levers Red, Pair
4	11.7015.000.000	07-08 Rival/Force Shifter Clamp Kit, Pair
ns	11.7015.050.000	09-11 Road Shifter Clamp Kit, Pair
ns	11.7915.002.000	Rival/Force Cable Downtube Barrel Adjuster (R/L)
ns	11.7015.065.020	Shifter Spring, Right, Force/Rival (Qty 5)
ns	11.7015.065.030	Shifter Spring, Left, Force/Rival (Qty 5)

DOUBLETAP ROAD TRIGGER (2x10 & 3x9) - SHIFTER (2008-2012)

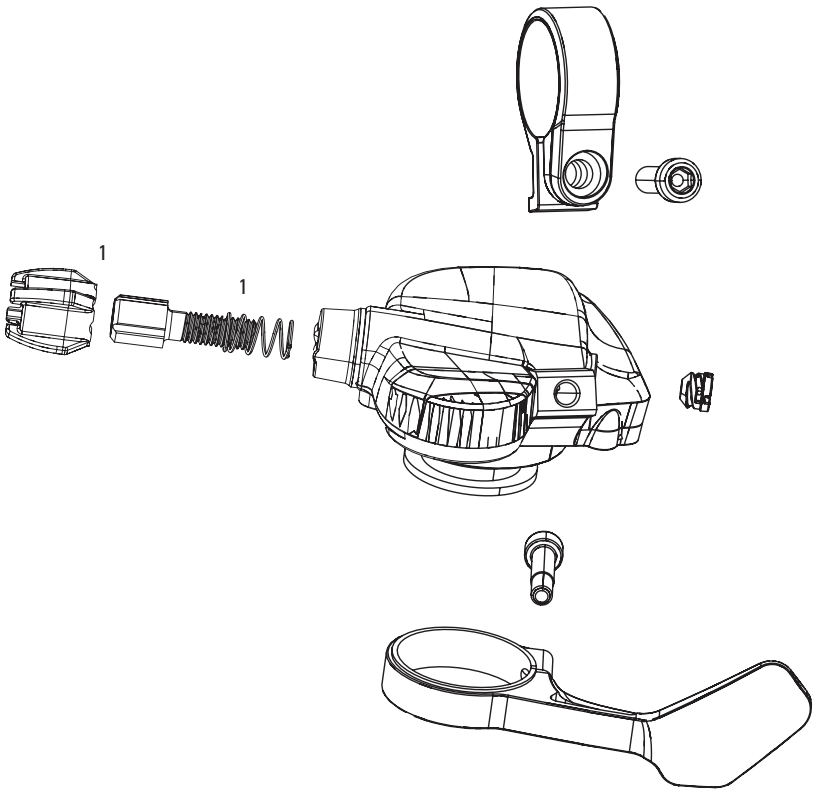

No.	Part Number	Description
1	11.7015.024.000	07-09 X0/X9 Trigger Barrel Adjuster Qty 2 (M6, 3PC)

TIME TRIAL BRAKE LEVER (2008-2012)

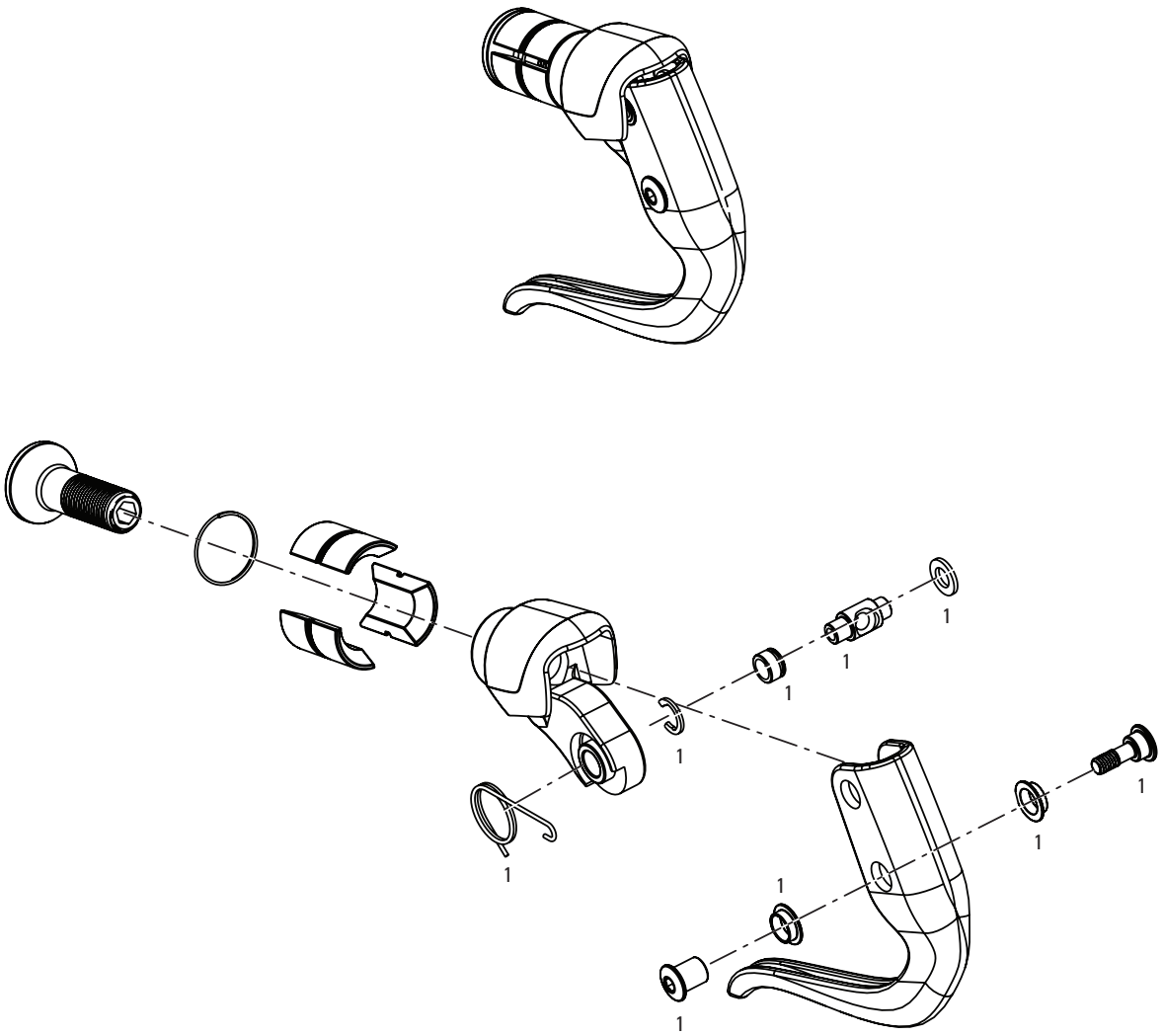

No.	Part Number	Description
1	11.5215.024.000	TT900, TT500 Brake Lever Hardrware Kit Qty 1

TIME TRIAL SHIFTER (2008-2012)

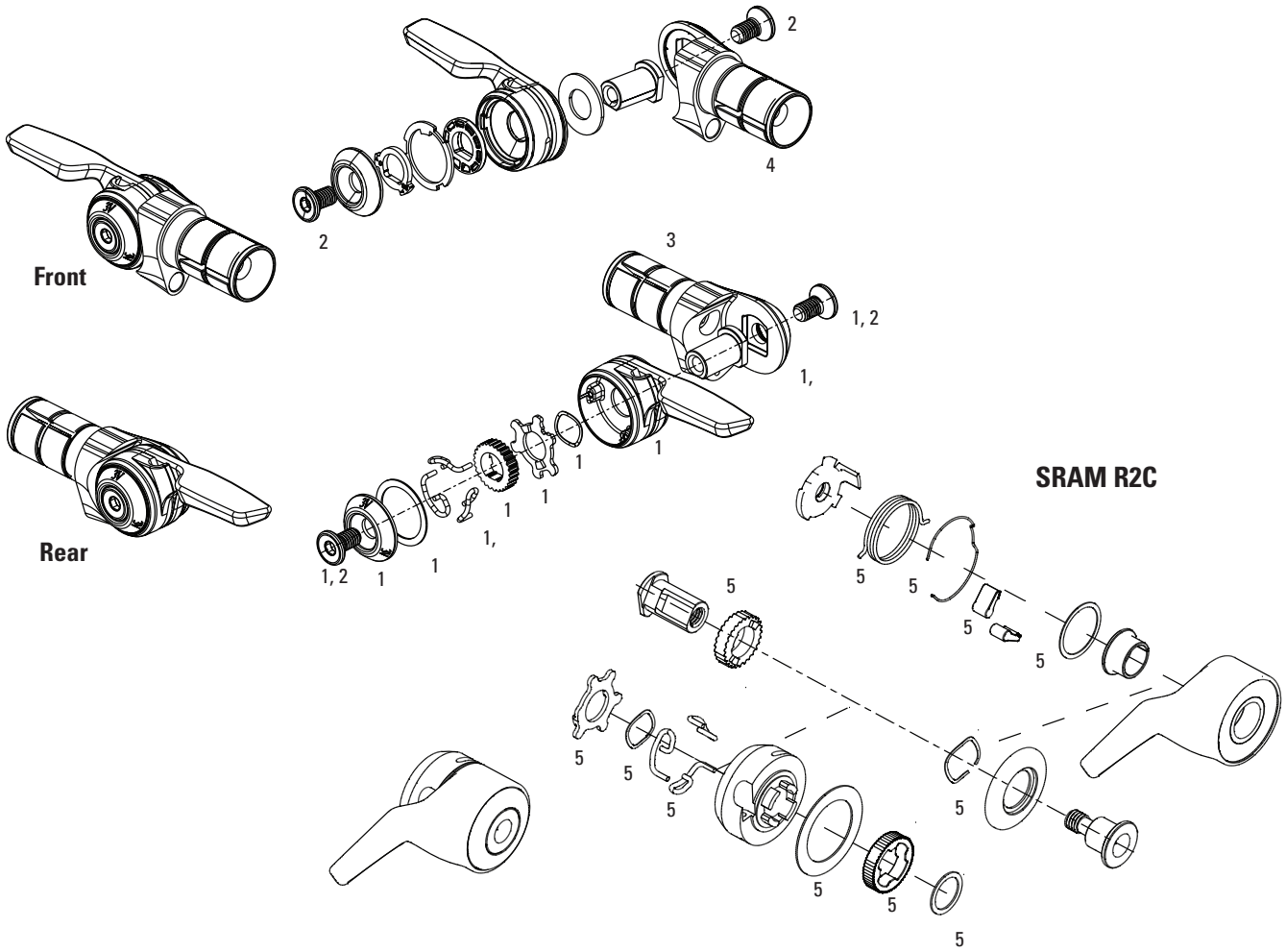

No.	Part Number	Description
1	11.7015.036.000	TT900, TT500 Shifter Spring Kit Rear
2	11.7015.037.000	TT900, TT500 Shifter Screw Kit F/R
3	11.7015.038.000	TT900, TT500 Bar Lock Assy Rear
4	11.7015.038.010	TT900, TT500 Bar Lock Assy Front
5	11.7015.075.000	R2C Shifter Front/Rear Service Kit

SRAM RED 22 B1 / FORCE 22 / CX1 / RIVAL 22 / 700 B1 HRD / HRR CALIPERS

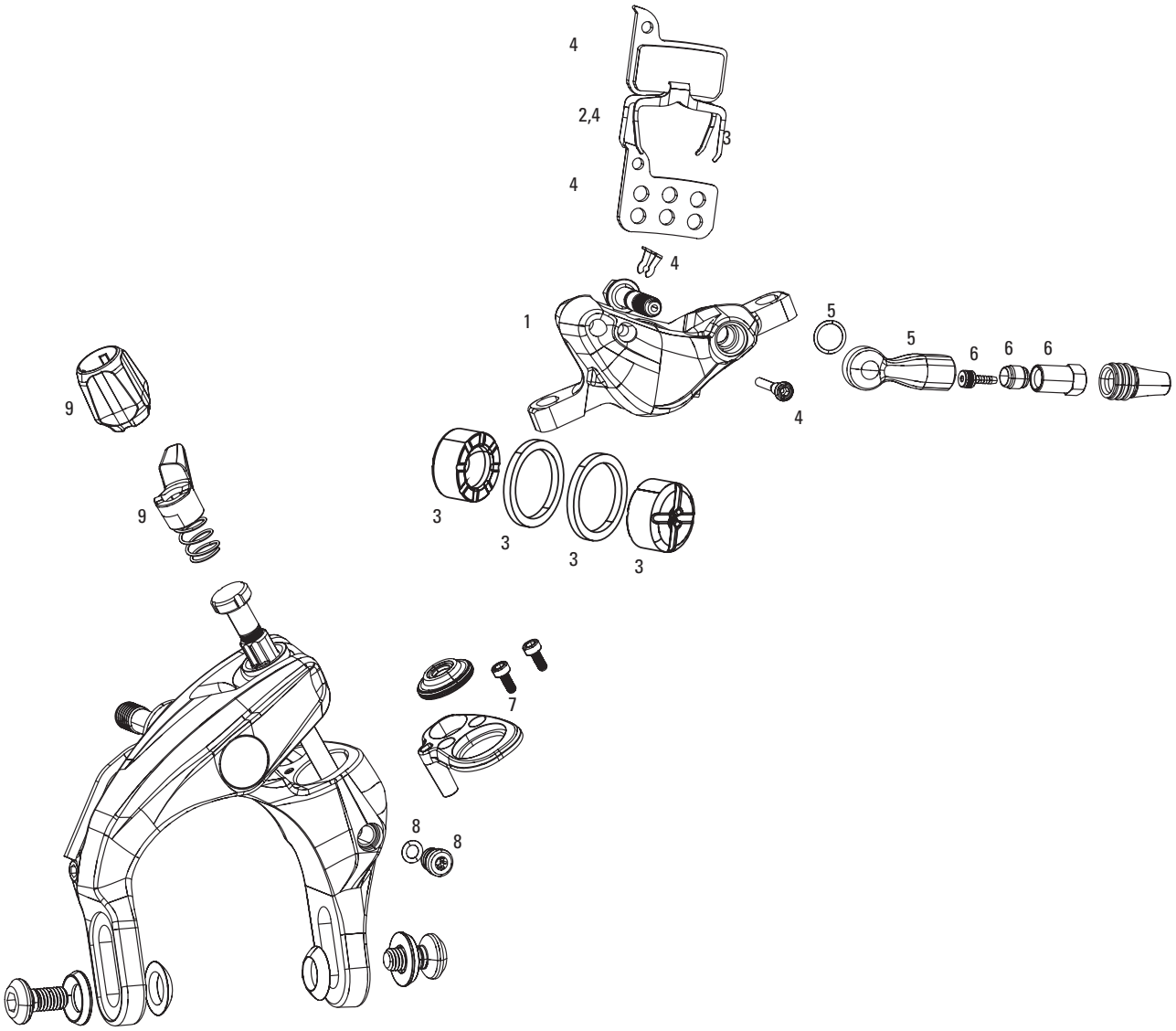

No.	Part Number	Description
1	11.5018.024.000	RED22 HRD B1 Caliper Assembly 18mm Front/Rear Grey
1	11.5018.025.000	700 HRD B1 Caliper Assembly 18mm Front/Rear Black
1	11.5018.026.000	Force22 HRD B1 Caliper Assembly 18mm Front/Rear Grey
1	11.5018.027.000	Rival22 HRD B1 Caliper Assembly 18mm Front/Rear Black
2	11.5018.028.000	Red 22 700 B1 Pad Spreader QTY 20
3	11.5018.029.000	Piston Kit Caliper Red2/700 B1 18mm Rear
4	00.5318.010.001	Disc Brake Pads Organic/Stainless, SRAM Road (1 set, includes bleed block)
4	11.5018.014.000	Disc Brake Pads Organic/Stainless SRAM Road 20 Sets
5	11.5018.030.000	Hydraulic Road Disc/Rim Brake Hose Fitting Kit, Qty 1 (threaded hose barb, comp fitting, bleed block)
5	11.5018.031.000	Hydraulic Road Disc Brake Non-Connectamajig Banjo Black Qty 1
6	11.5018.031.001	Hydraulic Road Disc Brake Non-Connectamajig Banjo Silver Qty 1
7	11.5118.003.000	Red22 HRR Piston and Cover Kit with Screws Qty1
8	11.5118.004.000	Red22 HRR Reservoir Bleed Screw with O-Ring
9	11.5118.005.000	Red22 HRR Barrel Adjuster and Quick Release Qty1

SRAM RED 2013 - BRAKE CALIPER

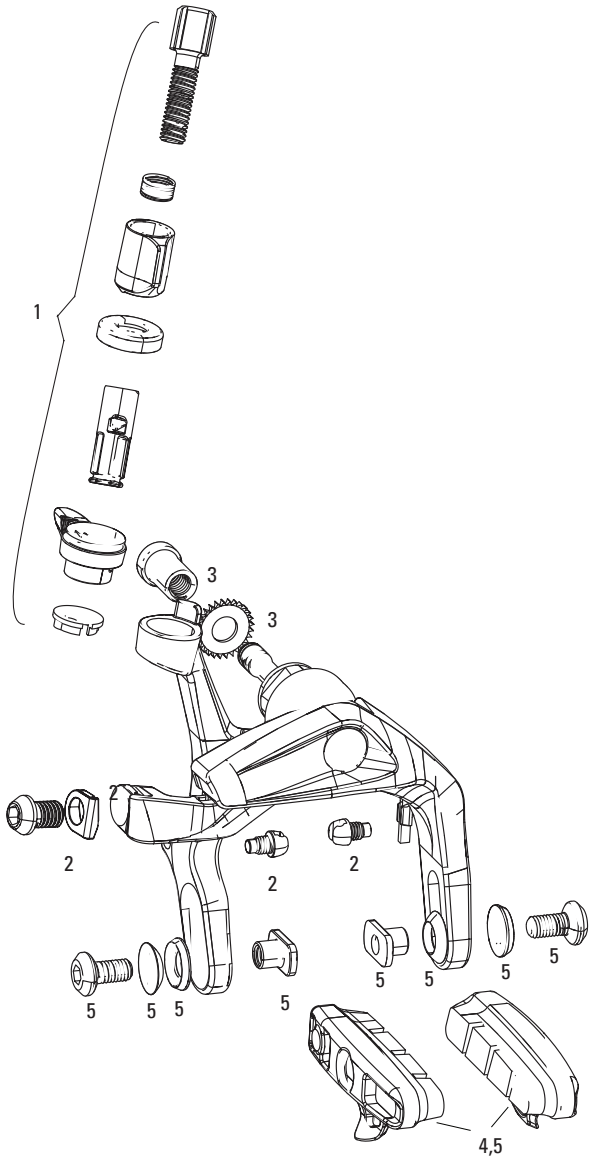

No.	Part Number	Description
1	11.5118.000.000	Red 13 Aero Link Brake Barrel Adjuster/Quick Release Qty1
2	11.5118.001.000	Red 13 Aero Link Brake Clamp Bolt/Spring Adjust Qty1
ns	00.7918.011.000	SRAM Red Brake Centering Wrench, 13mm (2013)
3	11.5415.018.000	Red Brake Center Nut/Washer (10, 12, 14, 16, 18, 20, 22, 30)
4	11.5115.000.000	Brake Pad Insert SRAM Road Black Qty 2
5	00.5315.013.050	Brake Pad/Holder Red Black Pair

SRAM RED (2008-2011) - BRAKE CALIPER

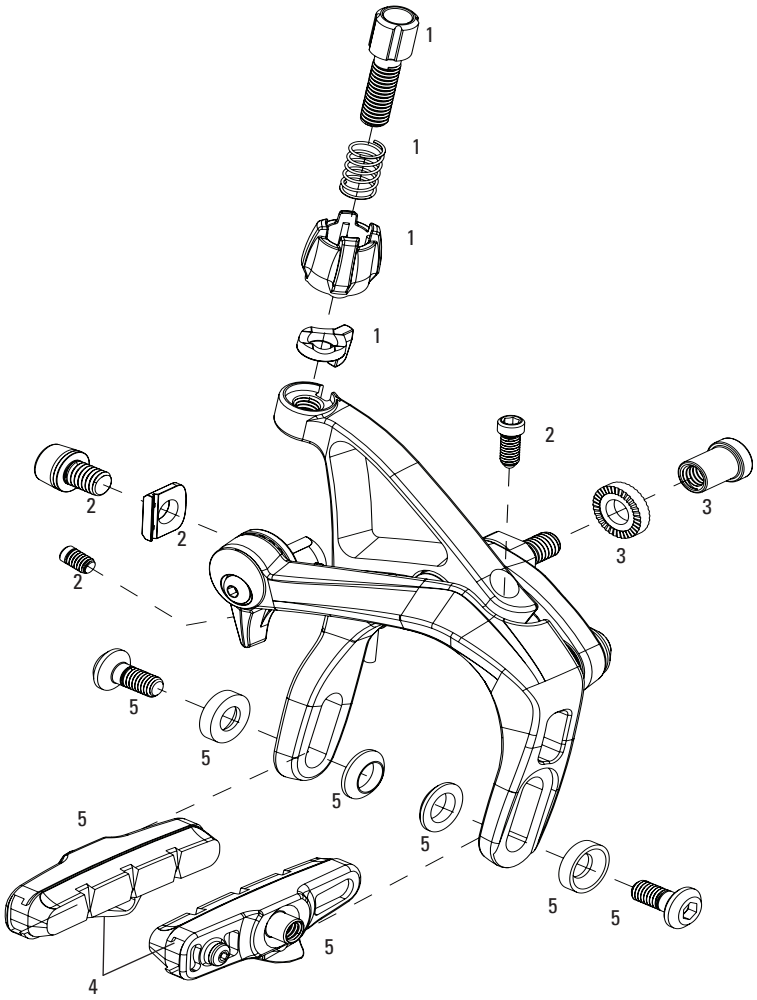

No.	Part Number	Description
1	11.5415.016.000	Red/11 Force Brake Barrel Adjuster
2	11.5415.017.010	Red/Force Brake Cable Clamp Bolt/Adjuster Screws, Qty 1
2	11.5415.017.030	Red Black Brake Cable Clamp Bolt/Adjuster Screws, Qty 1
3	11.5415.018.000	Red Brake Center Nut/Washer (10, 12, 14, 16, 18, 20, 22, 30)
4	11.5115.000.000	Brake Pad Insert SRAM Road Qty 2
4	11.5115.000.010	Brake Pad Insert for Carbon Rim SRAM Road Qty 2
5	00.5315.013.050	Brake Pad/Holder Red Black Pair

SRAM FORCE / SRAM RIVAL / SRAM APEX - BRAKE CALIPER (2007-2012)

Check brake caliper before ordering. Threaded only compatible with threaded barrel adjusters.

Prüfen Sie vor einer Bestellung: hat die Aufnahme ein Gewinde, so ist nur die Einstellschraube mit Gewinde kompatibel.

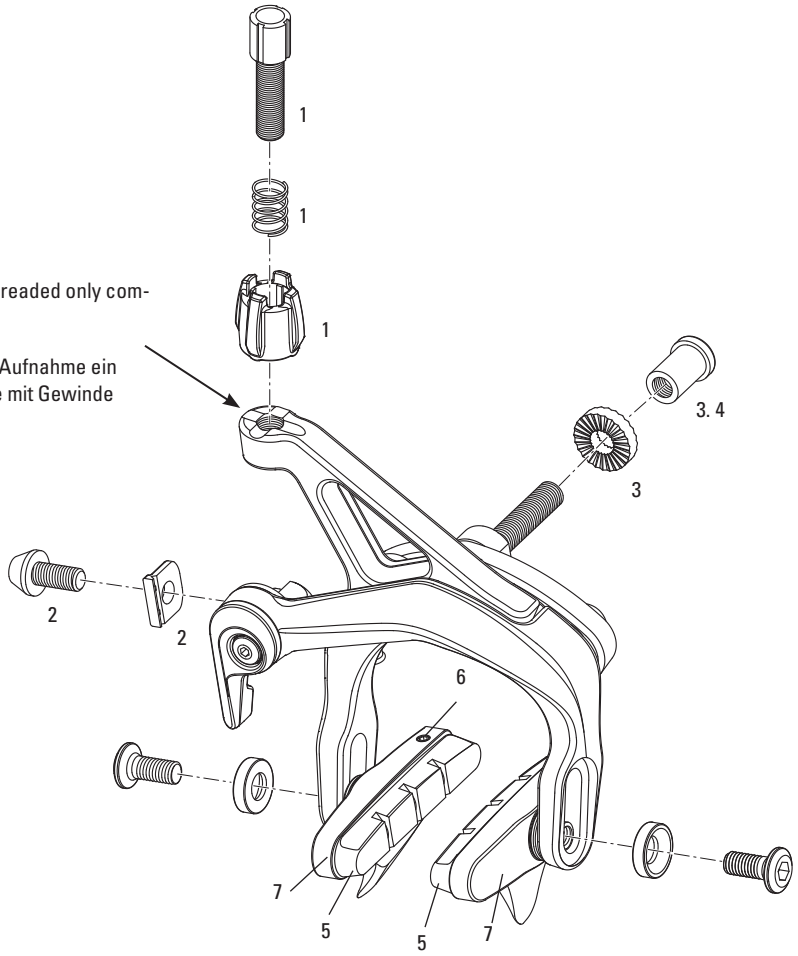

No.	Part Number	Description
1	11.5315.042.000	Apex/Rival/Force Brake Barrel Adjuster Threaded, Qty 1
1	11.5415.016.000	Red/11 Force Brake Barrel Adjuster
2	11.5415.005.000	Rival/09 Force Brake Cable Clamp Bolt, Qty 1
3	11.5415.006.000	Rival/Force Brake Center Nut/Washer Kit, Qty 1
4	11.5415.007.000	Rival/Force Brake Center Nut Set (12, 16, 20, 30)
5	11.5115.000.000	Brake Pad Insert SRAM Road Qty 2
6	11.5115.003.000	Rival/Force Brake Pad Set Screw, Qty 2 (Mid-2007 And Later)
7	00.5315.013.030	Brake Pad/Holder Force Pair
7	00.5315.016.000	Brake Pad/Holder Rival Black Pair
7	00.5315.016.010	Brake Pad/Holder Apex Pair

Part Number	Description
11.6118.020.000	RED22 ExoGram Left Arm GXP 165
11.6118.020.001	RED22 ExoGram Left Arm GXP 1675
11.6118.020.002	RED22 ExoGram Left Arm GXP 170
11.6118.020.003	RED22 ExoGram Left Arm GXP 1725
11.6118.020.004	RED22 ExoGram Left Arm GXP 175
11.6118.020.005	RED22 ExoGram Left Arm GXP 1775
11.6118.001.000	Red 13 ExoGram Left Arm GXP 165
11.6118.001.001	Red 13 ExoGram Left Arm GXP 1675
11.6118.001.002	Red 13 ExoGram Left Arm GXP 170
11.6118.001.003	Red 13 ExoGram Left Arm GXP 1725
11.6118.001.004	Red 13 ExoGram Left Arm GXP 175
11.6118.001.005	Red 13 ExoGram Left Arm GXP 1775
11.6115.537.010	Left Arm Apex GXP 170 Mirror Black
11.6115.537.020	Left Arm Apex GXP 1725 Mirror Black
11.6115.537.030	Left Arm Apex GXP 175 Mirror Black
11.6115.549.010	Left Arm Apex GXP 170 White
11.6115.549.020	Left Arm Apex GXP 1725 White
11.6115.549.030	Left Arm Apex GXP 175 White
11.6115.504.220	Left Arm Rival OCT 165 Black
11.6115.504.230	Left Arm Rival OCT 170 Black
11.6115.504.240	Left Arm Rival OCT 1725 Black
11.6115.504.250	Left Arm Rival OCT 175 Black
11.6115.504.270	Left Arm Rival OCT 180 Black
11.6118.021.000	FORCE22 Left Crank Arm GXP 165
11.6118.021.001	FORCE22 Left Crank Arm GXP 170
11.6118.021.002	FORCE22 Left Crank Arm GXP 1725
11.6118.021.003	FORCE22 Left Crank Arm GXP 175
11.6118.021.004	FORCE22 Left Crank Arm GXP 1775
11.6118.032.000	Force CX1 Left Crank Arm GXP 170
11.6118.032.001	Force CX1 Left Crank Arm GXP 1725
11.6118.032.002	Force CX1 Left Crank Arm GXP 175
11.6118.031.000	Rival22 Left Crank Arm GXP 170 Mirror Black
11.6118.031.001	Rival22 Left Crank Arm GXP 1725 Mirror Black
11.6118.031.002	Rival22 Left Crank Arm GXP 175 Mirror Black
11.6115.504.060	2010 Force GXP Left Crank Arm 170
11.6115.504.070	2010 Force GXP Left Crank Arm 1725
11.6115.504.080	2010 Force GXP Left Crank Arm 175
11.6115.504.090	2010 Force GXP Left Crank Arm 1775
11.6115.504.160	2010 Force BB30 Left Crank Arm 165
11.6115.504.170	2010 Force BB30 Left Crank Arm 1675
11.6115.504.180	2010 Force BB30 Left Crank Arm 170
11.6115.504.190	2010 Force BB30 Left Crank Arm 1725
11.6115.504.200	2010 Force BB30 Left Crank Arm 175
11.6115.504.210	2010 Force BB30 Left Crank Arm 1775
11.6115.504.000	Red 165 GXP Left Arm
11.6115.504.010	Red 167.5 GXP Left Arm
11.6115.504.020	Red 170 GXP Left Arm
11.6115.504.030	Red 172.5 GXP Left Arm
11.6115.504.040	Red 175 GXP Left Arm
11.6115.504.050	Red 177.5 GXP Left Arm
11.6115.504.100	Red BB30 Left Crank Arm 165
11.6115.504.110	Red BB30 Left Crank Arm 1675
11.6115.504.120	Red BB30 Left Crank Arm 170
11.6115.504.130	Red BB30 Left Crank Arm 1725
11.6115.504.140	Red BB30 Left Crank Arm 175
11.6115.504.150	Red BB30 Left Crank Arm 1775
11.6118.023.000	S100 Left Crank Arm GXP 165 Mirror Black
11.6118.023.001	S100 Left Crank Arm GXP 170 Mirror Black
11.6118.023.002	S100 Left Crank Arm GXP 1725 Mirror Black
11.6118.023.003	S100 Left Crank Arm GXP 175 Mirror Black
11.6115.538.000	Left Arm S100 / S150 170 Power Spline Blast Black
11.6115.538.010	Left Arm S100 / S150 1725 Power Spline Blast Black
11.6115.538.020	Left Arm S100 / S150 175 Power Spline Blast Black
11.6118.022.000	S300 Left Crank Arm GXP 165 Mirror Black
11.6118.022.001	S300 Left Crank Arm GXP 170 Mirror Black
11.6118.022.002	S300 Left Crank Arm GXP 175 Mirror Black

S900 / S950 LEFT ARMS, CHAINRINGS / CRANK PARTS - ROAD

Part Number	Description
11.6115.503.040	Left Arm S300 Crank Arm GXP 170 Mirror Black
11.6115.503.050	Left Arm S300 Crank Arm GXP 172.5 Mirror Black
11.6115.444.140	Left Arm S500/550 GXP 170 Mirror Black
11.6115.444.180	Left Arm S500/550 GXP 175 Mirror Black
11.6115.504.310	Left Arm S900/S950 GXP 170 Carbon
11.6115.504.320	Left Arm S900/S950 GXP 172.5 Carbon
11.6115.504.330	Left Arm S900/S950 GXP 175 Carbon
11.6115.504.340	Left Arm S900/S950 GXP 177.5 Carbon
11.6115.560.010	Left Arm S900/950 BB30 170 Carbon
11.6115.560.020	Left Arm S900/950 BB30 172.5 Carbon
11.6115.560.030	Left Arm S900/950 BB30 175 Carbon
11.6115.560.040	Left Arm S900/950 BB30 177.5 Carbon
11.6218.000.000	Chain Ring Road Red X-Glide R 53T Yaw S2 Hidden Bolt 130 Alum 5mm Falcon Grey (53-39)
11.6218.000.001	Chain Ring Road Red X-Glide R 39T Yaw S1 130 Alum 3mm Blast Black (53-39)
11.6218.001.000	Chain Ring Road Red X-Glide R 50T Yaw S2 Hidden Bolt 110 Alum 5mm Falcon Grey (50-34)
11.6218.001.001	Chain Ring Road Red X-Glide R 34T Yaw S1 110 Alum 3mm Blast Black (50-34)
11.6218.002.000	Chain Ring Road X-Glide R 53T Yaw S2 Non-Hidden Bolt 130 Alum 5mm Falcon Grey (53-39)
11.6218.003.000	Chain Ring Road X-Glide R 50T Yaw S2 Non-Hidden Bolt 110 Alum 5mm Falcon Grey (50-34)
11.6918.000.000	Chain Ring Bolt Kit Red Quarq Hidden Bolt 5-arm Steel Black
11.6918.000.001	Chain Ring Bolt Kit Red Hidden Bolt 5/arm Aluminum Black
11.6215.172.000	Chain Ring SS/Road 44T 130 Alum 3mm Blast Black
11.6215.198.000	Chain Ring Road Red 53T S1 130 Alum 4mm Black
11.6215.198.010	Chain Ring Road Red 50T S1 110 Alum 4mm Black(50-34)
11.6215.198.020	Chain Ring Road Red TT 53T S1 Non-Hidden Bolt 130 Alum 4mm Black
11.6215.198.030	Chain Ring Road Red TT 54T S1 Non-Hidden Bolt 130 Alum 4mm Black
11.6215.198.040	Chain Ring Road Red TT 55T S1 Non-Hidden Bolt 130 Alum 4mm Black
11.6215.198.050	Chain Ring Road Red 52T S1 110 Alum 4mm Black (52-36, 52-38)
11.6215.197.030	Chain Ring Road 53T V4 130 Alum 4mm Black
11.6215.197.040	Chain Ring Road 52T B Triple V2 130 Alum 4mm Black (52-39-30)
11.6215.197.050	Chain Ring Road 50T A V4 110 Alum 4mm Black (50-36)
11.6215.197.060	Chain Ring Road 50T B V2 110 Alum 4mm Black (50-34)
11.6215.197.070	Chain Ring Road 50T Triple V1 130 Alum 4mm Black (50-39-30)
11.6215.197.080	Chain Ring Road 48T V2 110 Alum 4mm Black BB30 Short Pin (48 34)
11.6215.197.090	Chain Ring Road 48T V2 110 Alum 4mm Black GXP Long Pin (48-34)
11.6215.197.100	Chain Ring Road Track Omnium 48T V1 144 Alum 5mm Black
11.6215.197.110	Chain Ring SS/Road Track 48T V1 130 AL3 Black
11.6215.197.120	Chain Ring Road 46T V1 130 Alum 4mm Black (46-38)
11.6215.197.000	Chain Ring Road Red TT 42T B V4 130 Alum 3mm Black (55-42, 54-42)
11.6215.197.010	Chain Ring Road 39T V2 130 Alum 3mm Black (53-39, 48-39)
11.6215.197.130	Chain Ring Road 39T V4 130 Triple Alum 3mm Black (52-39-30, 50-39-30)
11.6215.197.140	Chain Ring Road 38T V1 130 Alum 3mm Black (46-38)
11.6215.197.150	Chain Ring Road 38T V1 110 Alum 3mm Black (52-38)
11.6215.197.160	Chain Ring Road 36T V3 110 Alum 3mm Black (50-36, 52-36, 46-36)
11.6215.197.020	Chain Ring Road 34T V1 110 Alum 3mm Black (50-34)
11.6215.197.170	Chain Ring Road 30T Triple V4 74 Alum Black (52-39-30, 50-39 30)
11.6215.197.180	Chain Ring Road 46T S1 110 Alum 4mm Black Long Pin (Force GXP, Rival, Apex, S350, S550)
11.6215.197.190	Chain Ring Road 46T S1 110 Alum 4mm Black Short Pin (Red, Force BB30, S950)
11.6415.007.000	Bottom Bracket Shield and Wave Washer Assembly PressFit GXP Road
11.6415.007.020	Bottom Bracket Shield and Wave Washer Assembly BB30 Bearing
11.6115.533.000	Spindle Spacer, BB30 - DS 13
11.6115.533.010	Spindle Spacer, BB30 - Drive Side 9.11
11.6115.533.020	Spindle Spacer, BB30 - Drive Side 15.46
11.6415.005.000	BB30 Spacer Kit 2 X 2.5mm
11.6218.005.000	Chain Ring Road Red TT 55T S1 Hidden Bolt 130 Alum 4mm Falcon Grey

SPIDERS, CASSETTES (10 SPEED / 9 SPEED), BOTTOM BRACKETS - ROAD

Part Number	Description
11.6115.547.000	Spider S900 130BCD 10Speed Blast Black
11.6115.547.010	Spider S950 110BCD 10Speed Blast Black
11.6915.009.000	Chain Ring Bolt Kit 5-Arm Double Aluminum Black
11.6915.008.000	Chain Ring Bolt Kit 5-arm Double Aluminum Silver
11.6915.012.000	Chain Ring Bolt Kit 5 Steel/Black
11.6900.002.160	Crank Arm Bolt M15/M25 Alloy Self-Extracting GXP Black Qty 1
11.6900.002.140	Crank Arm Bolt M15/M25 Alloy Self-Extracting GXP Silver Qty 1
11.6115.115.000	Crank Arm Bolts M8 Capless Qty 2 for Square-taper & PowerSpline
11.6900.002.050	Crank Arm Bolts M15 Capless Qty 2 for ISIS & Hwtzr M15
11.6115.530.050	Crank Arm Bolt M18/M30 Alloy Self-Extracting BB30 Left (Black Red, Force) Qty 1
11.2418.000.000	XG1090 X-Dome Stealth Ring Set 11-23
11.2418.000.001	XG1090 X-Dome Stealth Ring Set 11-25/26
11.2418.000.002	XG1090 X-Dome Stealth Ring Set 11-28
11.2415.013.000	Cassette Lockring Aluminum OG1070, PG970 For 12T
11.2415.027.000	Cassette PG1050, PG1030, PG950 Lockring 11T Steel
11.2415.027.010	Cassette PG1050, PG950 Lockring 12T Steel
11.2415.026.000	XX, PG1099, PG1080, PG999, PG990, PG970 OG1090, OG1070 Cassette Lockring 11T Aluminum
11.2415.022.000	Cassette Lockring Aluminum PG990, PG970 Dh for 11T Red
00.6415.032.010	Tool BB30 to BSA Adapter Removal Kit
00.6415.032.020	BB30 Bearing Install Kit
00.6415.032.030	BB30 Bearing Removal Tool
11.6415.003.000	BB30 Shim/Wave Washer Kit
11.6215.195.000	Aero Guard Via 48T Clear Smoke
11.6700.002.010	Pedal Washers Chromo, Qty 2
11.6118.004.000	XX1 Specialized Spider with Chain Ring Bolts 76BCD 11Speed Zephyr Grey
11.2418.001.000	XG1190 X-Dome Stealth Ring Set 11-25/26
11.2418.001.001	XG1190 X-Dome Stealth Ring Set 11-28
11.2418.002.000	XG1190 Cassette Lockring 11t 11speed Aluminum
11.2418.003.000	PG1170 Cassette Lockring 11t 11speed Aluminum

Part Number	Description
11.1915.000.080	Spokes & Nipples 3-pack 220mm Bladed for S80 Rear Driveside Black
11.1915.000.090	Spokes & Nipples 3-pack 236mm Bladed for S80 Front Black
11.1915.000.100	Spokes & Nipples 3-pack 246mm Bladed for S60 Rear Driveside Black
11.1915.000.110	Spokes & Nipples 3-pack 248mm Bladed for S80 Rear Non-Driveside Black
11.1915.000.120	Spokes & Nipples 3-pack 260mm Bladed for S60 Front Black
11.1915.000.160	Spokes & Nipples 3-pack 262mm Bladed for S40 Rear Drive Black
11.1915.000.130	Spokes & Nipples 3-pack 272mm Bladed for S60 Rear Non-driveside Black
11.1915.000.140	Spokes & Nipples 3-pack 276mm Bladed for S40 Front Black
11.1915.000.170	Spokes & Nipples 3-pack 290mm Bladed for S40 Rear Non-driveside Black
11.1915.016.000	Spokes & Nipples 3-pack 278mm CX for S27 Front
11.1915.016.010	Spokes & Nipples 3-pack 266mm CX for S27 Rear Driveside
11.1915.016.020	Spokes & Nipples 3-pack 280mm CX for S27 Rear Non-driveside
11.1915.016.090	Spokes & Nipples 3-pack 282mm CX Sprint for S30 Sprint Front
11.1915.016.100	Spokes & Nipples 3-pack 272mm CX Sprint for S30 Sprint Rear Driveside
11.1915.016.110	Spokes & Nipples 3-pack 286mm CX Sprint for S30 Sprint Rear Non-Driveside
11.1915.016.120	Spokes & Nipples 3-pack 282mm CX Ray for S30 Race Front
11.1915.016.130	Spokes & Nipples 3-pack 272mm CX Ray for S30 Race Rear Driveside
11.1915.016.140	Spokes & Nipples 3-pack 286mm CX Ray for S30 Race Rear Non-Driveside
11.1915.001.000	Freehub body with seal, SRAM/Shimano spline S40/S60/S80
11.1915.015.000	Freehub body Campagnolo spline S40/S60/S80
11.1915.017.000	Freehub body with seal, SRAM/Shimano spline S27/30
11.1915.002.000	Driveside hub seal S40/S60/S80
11.1915.003.000	Hub Bearings Front Pair S40/S60/S80
11.1915.003.010	Hub Bearings Rear Pair S40/S60/S80
11.1915.003.020	Hub Bearings Front Pair S30/S27
11.1915.003.030	Hub Bearings Rear Pair S30/S27
11.1915.004.080	Hub Axle Assembly Front S27 Comp S30 Sprint Lockring
11.1915.004.090	Hub Axle Assembly Rear S27 Comp S30 Sprint Lockring
11.1915.004.100	Hub Axle Assembly Front S30 Race Lockring
11.1915.004.110	Hub Axle Assembly Rear S30 Race Lockring
11.1915.005.030	Decal set for S40, Grey, 1 wheel
11.1915.005.040	Decal set for S60, Grey, 1 wheel
11.1915.005.050	Decal set for S80, Grey, 1 wheel
11.1915.007.000	Nipple Drive 5.5mm Socket 115mm
14.1915.006.000	Bearing removal & installation tools for S40, S60, S80 & FlashPoint Wheels
14.1915.007.000	Bearing removal & installation tools for S27/S30 Wheels

406 - MTB HUB

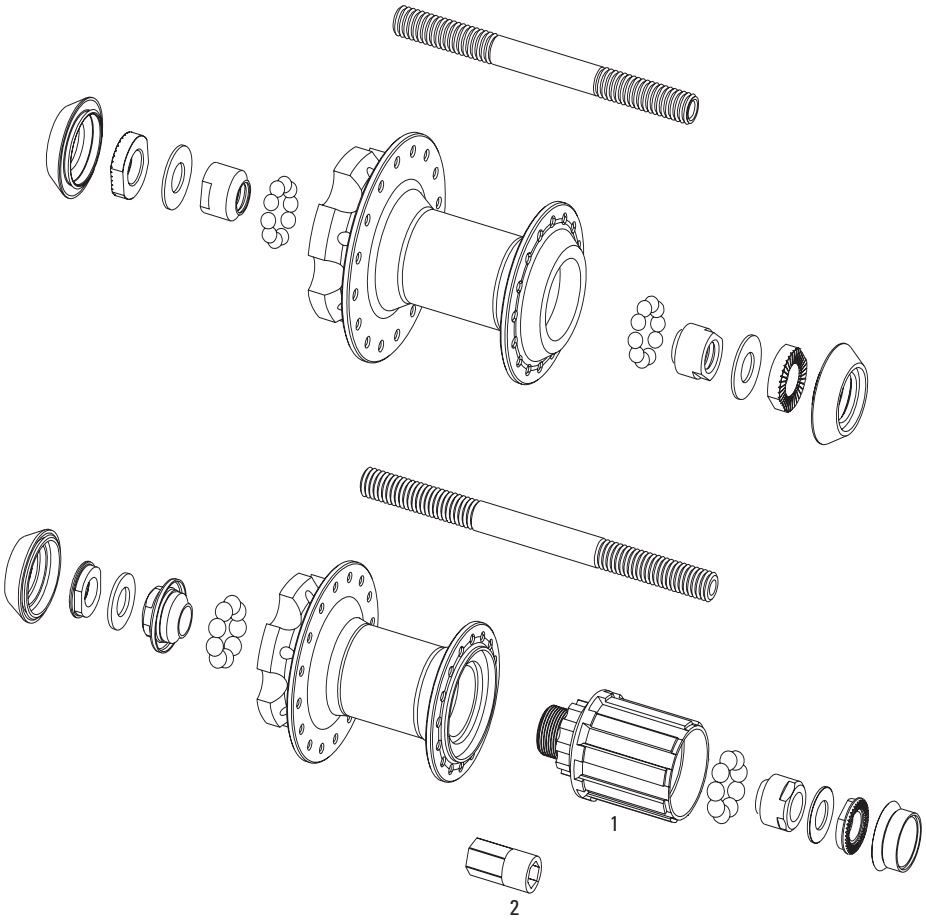

No.	Part Number	Description
1	11.2015.018.100	Kit Freehub Body, MTH 406
2	14.2015.000.000	SRAM MTB Hub FH Body Removal Tool (11mm adapter)

506 - MTB HUB

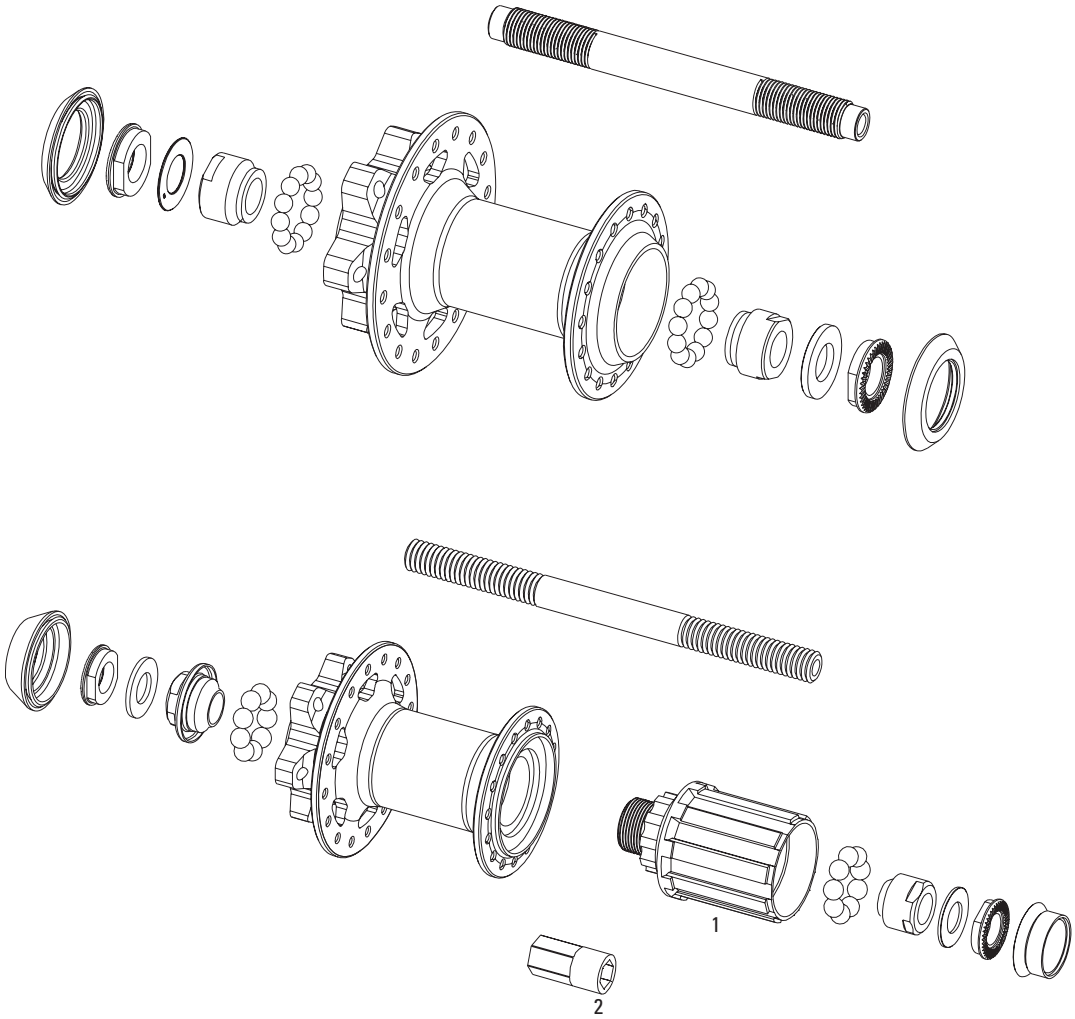

No.	Part Number	Description
1	11.2015.023.100	Kit Freehub Body, MTH 506
2	14.2015.000.000	SRAM MTB Hub FH Body Removal Tool (11mm adapter)

X7 - MTB HUB

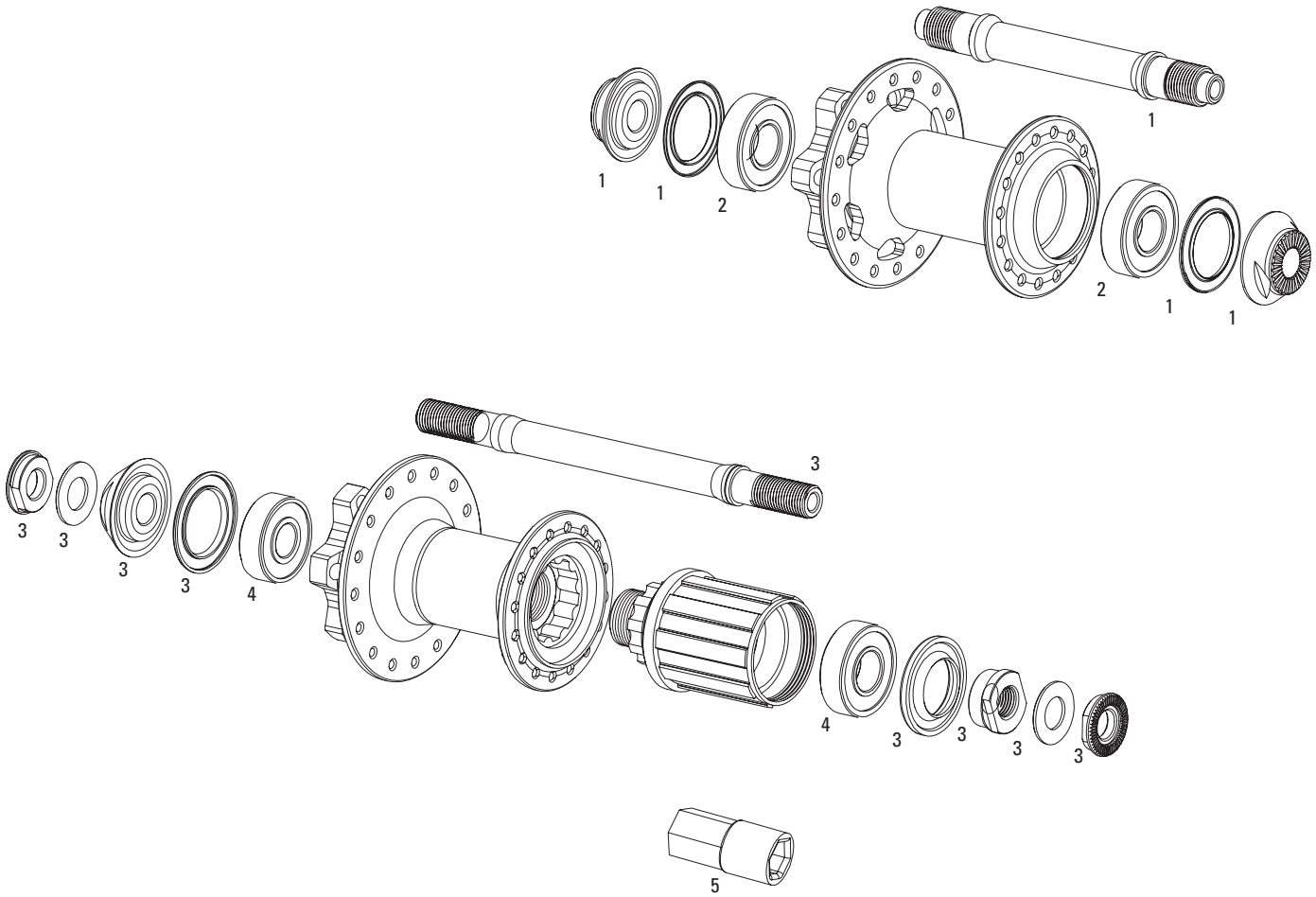

No.	Part Number	Description
1	11.2015.020.000	Kit Axle Assembly X-7 & X-9 V2 Front
2	11.2015.024.100	Kit Hub Bearings X-7 Front, 2-6001
3	11.2015.021.000	Kit Axle Assembly X-7 Rear
4	11.2015.021.100	Kit Hub Bearings X-7 Rear, 2-6000
5	14.2015.000.000	SRAM MTB Hub FH Body Removal Tool (11mm adapter)

X9 - MTB HUB

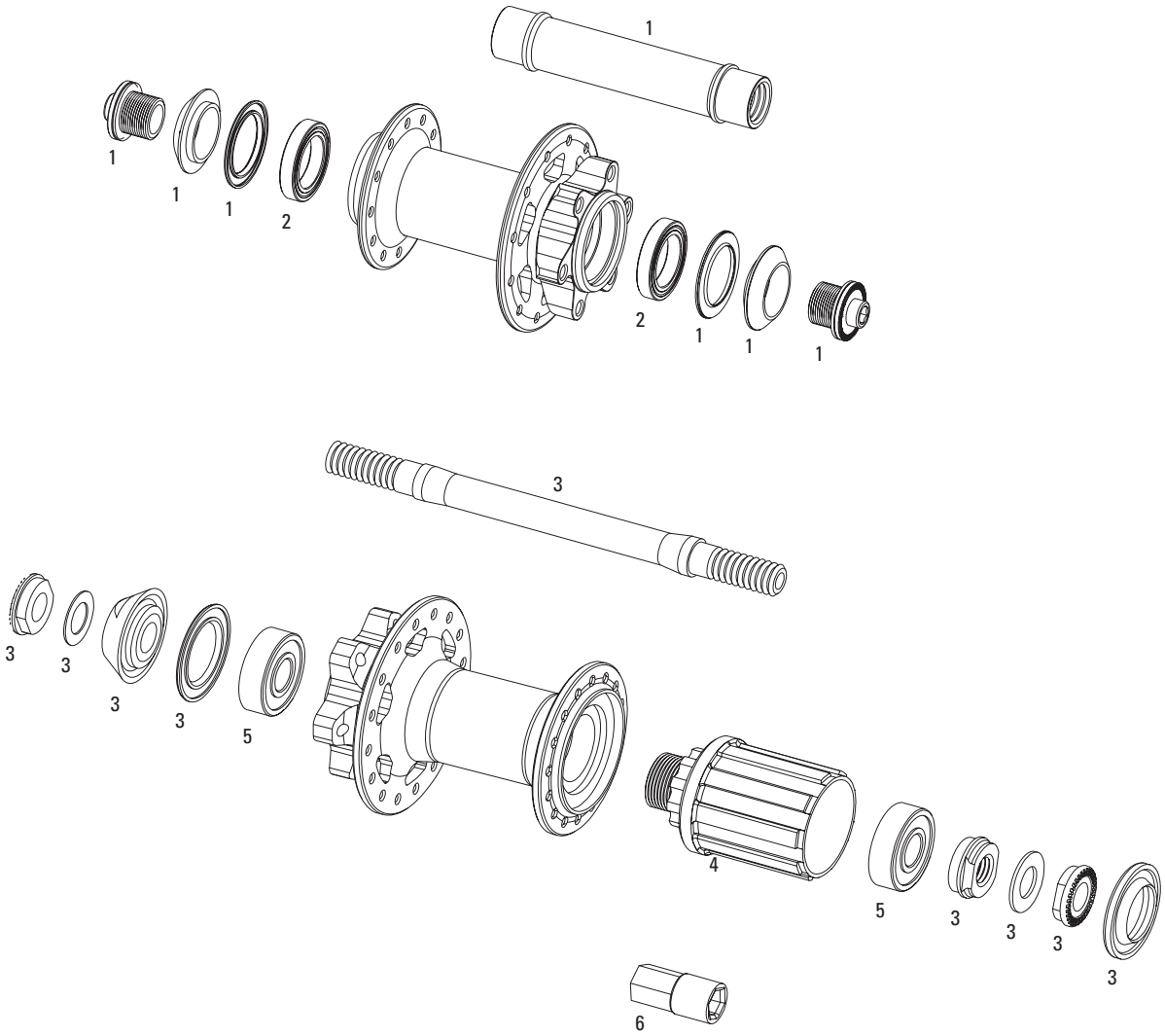

No.	Part Number	Description
1	11.2015.025.000	Kit Axle Assembly X-9 F 20x110
1	11.2015.026.000	Kit Axle Assembly X-9/Rise 40 F 15x100
1	11.2015.027.000	Kit Complete Axle, X-9 Front
2	11.2015.020.100	Kit Hub Bearings X-9 V2 Front, 2-6001
2	11.2015.025.100	Kit Hub Bearings X-9 20x110, 2-6804
2	11.2015.026.100	Kit Hub Bearings X-9/Rise 40 15x100, 2-6804
2	11.2015.027.100	Kit Hub Bearings, X-9 Front, 2-6803
3	11.2015.019.000	Kit Axle Assembly X-9 V2 Rear
3	11.2015.028.000	Kit Complete Axle Assembly, X-9/Rise 40 Rear
3	11.2015.029.000	Kit Axle Assembly X-9 R 12x135
3	11.2015.030.000	Kit Axle Assembly X-9/Rise 40 R 12x142
4	11.2015.019.200	Kit Freehub Body X-9 V2 Rear
4	11.2015.028.100	Kit Freehub Body, X-9/X-7/Rise 40,
4	11.2015.029.100	Kit Freehub Body X-9/Rise 40 12x135/142
5	11.2015.019.100	Kit Hub Bearings X-9 V2 Rear, 1-6803, 1-6000
5	11.2015.028.200	Kit, Hub Bearings, X-9/Rise 40 Rear, 2-6000
5	11.2015.029.200	Kit Hub Bearings X-9 Rear 12x135/142, 2-6903
6	14.2015.000.000	SRAM MTB Hub FH Body Removal Tool (11mm adapter)

X0 - MTB HUB

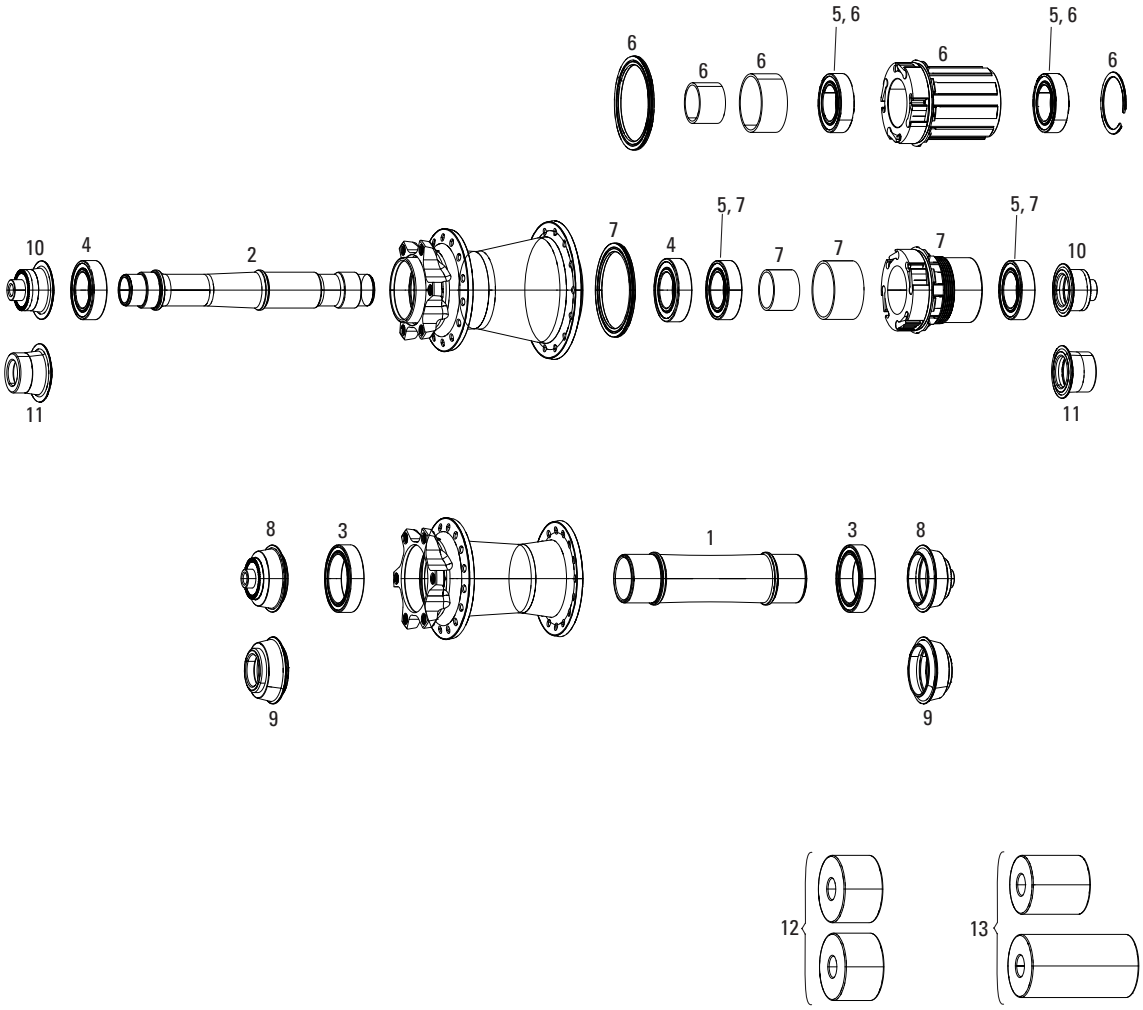

No.	Part Number	Description
1	11.1918.002.012	Hub Axle Front - X0 Hubs/Roam30/Roam40/Rise XX
2	11.1918.002.013	Hub Axle Rear - X0 Hubs/Roam30/Roam40/Rise XX
2	11.1918.002.015	Hub Axle Rear Trek Boost 148 (only for Boost 148 hubs) A1
3	11.1918.003.030	Hub Bearing Set Front (includes 2-23327) - X0 Hubs/Roam30/Roam40
4	11.1918.003.040	Hub Bearing Set Rear (includes 1-6903 & 1-17287) - X0 Hubs/Roam30/Roam40
5	11.1918.003.050	Hub Bearing Set Freehub/XD (includes 2-17287) - X0 Hubs/Roam30/Roam40
6	11.1918.000.011	Freehub Body with Bearings 9/10 Speed - X0 Hubs/Roam30/Roam40/Rise XX
7	11.1918.000.012	Freehub Body with Bearings 11 Speed XD - X0 Hubs/Roam30/Roam40/Rise XX
8	00.1918.145.000	Conversion Caps Hub X0 Front, 9QR 19mm Standard - X0 Hubs/Roam30/Roam40/Rise XX
8	00.1918.145.001	Conversion Caps Hub X0 Front, 9QR 31mm RockShox - X0 Hubs/Roam30/Roam40/Rise XX
9	00.1918.145.002	Conversion Caps Hub X0 Front, 15 Through Axle - X0 Hubs/Roam30/Roam40/Rise XX
9	00.1918.145.003	Conversion Caps Hub X0 Front, 20 Through Axle - X0 Hubs/Roam30/Roam40/Rise XX
10	00.1918.145.004	Conversion Caps Hub X0 Rear, 10x135 QR, fits 9/10 Speed Driver Body - X0 Hubs/Roam30/Roam40/Rise XX
10	00.1918.145.006	Conversion Caps Hub X0 Rear, 10x135 QR, fits XD Driver Body X0 Hubs/Roam30/Roam40/Rise XX
11	00.1918.145.007	Conversion Caps Hub X0 Rear, 12x142 Through Axle, fits XD Driver Body - X0 Hubs/Roam30/Roam40/Rise XX
11	00.1918.145.009	Conversion Caps Hub X0 Rear, 12x135 Through Axle, fits 9/10Speed Driver Body - X0 Hubs/Roam30/Roam40/Rise XX
11	00.1918.145.010	Conversion Caps Hub X0 Rear, 12x142 Through Axle, fits 9/10Speed Driver Body - X0 Hubs/Roam30/Roam40/Rise XX
ns	00.4318.005.001	Maxle Ultimate 15mm Black - PIKE/RS1
ns	00.4318.005.002	Maxle Lite 15mm Black XC (compatible with SID/Reba/Revelation/Recon/Sektor/XC32) 15mm TA) B1
12	00.1918.177.010	Bearing Press Tool 23327, Front Hub - Rise XX/X0/Roam 40,30
13	00.1918.177.020	Bearing Press Tools 6903/63803, Rear Hub - Rise XX/X0/Roam 40,30
ns	00.4318.008.000	Grease Sram Butter 20ml Syringe, Friction Reducing Grease bySlickoleum - Recommended for X0 Hub Pawls, Pike and Reverb Service

PREDICTIVE STEERING - MTB HUB

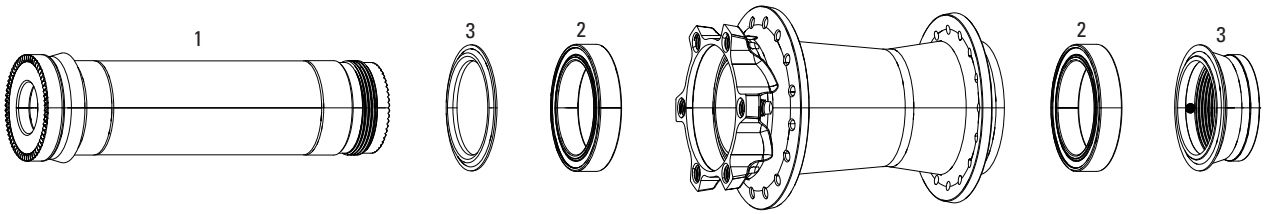

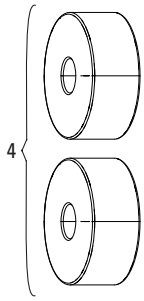

NOTES:
1. Predictive Steering hubs are not convertable to any other axle type.
2. Predictive Steering hubs may only be used with 00.4318.005.001 Maxle Ultimate 15mm Black - PIKE/RS1.

No.	Part Number	Description
1	11.1918.002.014	Hub Axle Front - Predictive Steering (includes axle, knurledring and plug) A1
2	11.1918.003.110	Hub Bearing Set Front (includes 2-27.5 37 7 STL) - Predictive Steering A1
3	11.1918.034.000	Hub End Cap for Predictive Steering (includes end cap, set screw and dust shield) A1
ns	00.4318.005.001	Maxle Ultimate 15mm Black - PIKE/RS1
4	00.1918.177.030	Bearing Press Tool 275377, Predictive Steering Front Hub - Rise XX/60, Roam 50
ns	00.4318.008.000	Grease Sram Butter 20ml Syringe, Friction Reducing Grease bySlickoleum - Recommended for X0 Hub Pawls, Pike and Reverb Service

WHEELS - RISE 40/60

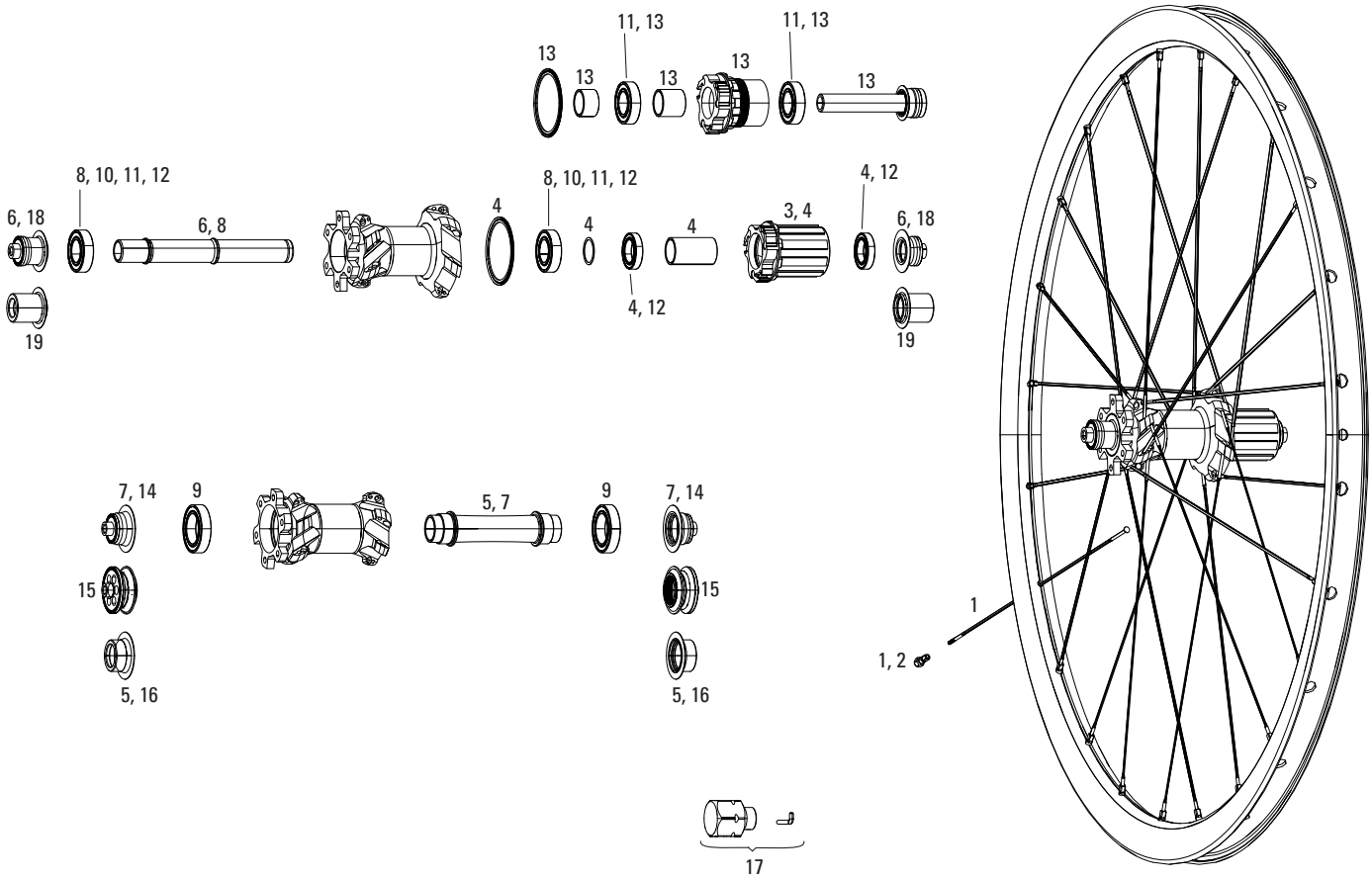

NOTES:
1. Part # 00.1915.231.010 Tool Conversion Cap Rise 40 Front is needed to change Conversion Caps of Rise 40 front wheels.
2. Rise 40 rear wheels are not convertable.

No.	Part Number	Description
1	11.1915.085.030	Spokes & Nipples 3-pack 264mm Rise 60 26" F-Non-Drive/R-Drive, CX-Ray Straight-Pull External Black
1	11.1915.085.040	Spokes & Nipples 3-pack 266mm Rise 60 26" F-Drive/R-Non-Drive CX-Ray Straight-Pull External Black
1	11.1915.085.050	Spokes & Nipples 3-pack 294mm Rise 60 29" R-Drive CX-Ray Straight-Pull External Black
1	11.1915.085.060	Spokes & Nipples 3-pack 296mm Rise 60 29" F-(Drive/Non-Drive)/R-Non-Drive CX-Ray Straight-Pull External Black
1	11.1915.083.010	Spokes & Nipples 3-pack 264mm Rise 40 26" Front/Rear Straight-Pull External Black
1	11.1915.083.015	Spokes & Nipples 3-pack 276mm Rise 40 27.5" Front/Rear Straight-Pull External Black
1	11.1915.083.020	Spokes & Nipples 3-pack 295mm Rise 40 29" Front/Rear Straight-Pull External Black
2	11.1918.033.000	Spoke Nipples Brass for Rise 40 wheels 2.0 X 14 - QTY 24
2	11.1918.033.001	Spoke Nipples Alloy for Rise 60/XX, Roam 50/60 and Rail series wheels 2.0 X 14 - QTY 24
3	11.2015.028.100	Kit Freehub Body, X-9/X-7/Rise 40,
3	11.2015.029.100	Kit Freehub Body X-9/Rise 40 12x135/142
3	11.1918.001.000	Freehub Body Pawls & Springs Rise 60

No.	Part Number	Description
4	11.1918.000.000	Freehub Body with Bearings Rise 60
5	11.2015.026.000	Kit Axle Assembly X-9/Rise 40 F 15x100
6	11.2015.028.000	Kit Complete Axle Assembly, X-9/Rise 40 Rear
6	11.2015.030.000	Kit Axle Assembly X-9/Rise 40 R 12x142
7	11.1918.002.000	Hub Axle Front Rise 60
8	11.1918.002.011	Hub Axle Rear Rise 60 Titanium (includes hubshell bearings)
9	11.2015.026.100	Kit Hub Bearings X-9/Rise 40 15x100, 2-6804
9	11.1918.003.000	Hub Bearing Set Front (includes 2-6804) Rise 60
10	11.2015.028.200	Kit, Hub Bearings, X-9/Rise 40 Rear, 2-6000
11	11.1918.003.020	Hub Bearing Set Rear (includes 4-6902) Rise 60 XD
12	11.1918.003.010	Hub Bearing Set Rear (includes 2-6802, 2-6902 & spacer) Rise60
13	00.2018.004.000	MTB Hub XD Driver Body 11 Speed Kit for Rise 60 Wheel
14	00.1915.230.010	Conversion Caps Wheel Rise 40 Front - 9QR 19 Standard
14	00.1915.230.040	Conversion Caps Wheel Rise 60 Front - 9QR 19 Standard
15	00.1915.230.020	Conversion Caps Wheel Rise 40 Front - 9QR 31 RockShox
15	00.1915.230.050	Conversion Caps Wheel Rise 60 Front - 9QR 31 RockShox
16	00.1915.230.030	Conversion Caps Wheel Rise 40 Front - 15
16	00.1915.230.060	Conversion Caps Wheel Rise 60 Front - 15
17	00.1915.231.010	Tool Conversion Cap Rise 40 Front
18	00.1915.230.070	Conversion Caps Wheel Rise 60 Rear 10x135
18	00.1915.230.090	Conversion Caps Wheel Rise 60 Rear 10x135, fits XD Driver Body
19	00.1915.230.080	Conversion Caps Wheel Rise 60 Rear 12x142
19	00.1915.230.100	Conversion Caps Wheel Rise 60 Rear 12x142, fits XD Driver Body
ns	11.1915.084.010	Decal Kit - Rise 60 MTB - 1 Rim
ns	11.1915.084.020	Decal Kit - Rise 60 MTB 29 - 1 Rim
ns	00.1915.232.010	Quick Release Pair Rise 60 Stainless
ns	00.1915.002.020	Quick Release Pair X.9 Steel Black for MTB Wheels
ns	00.1915.228.010	Rim Strip 26” Pair for Rise 40, Rise 60
ns	00.1915.228.020	Rim Strip 29” Pair for Rise 40, Rise 60
ns	11.1915.084.010	Decal Kit - Rise 60 MTB - 1 Rim
ns	00.4318.005.001	Maxle Ultimate 15mm Black - PIKE/RS1
ns	00.4318.005.002	Maxle Lite 15mm Black XC (compatible with SID/Reba/Revelation/Recon/Sektor/XC32) 15mm TA) B1

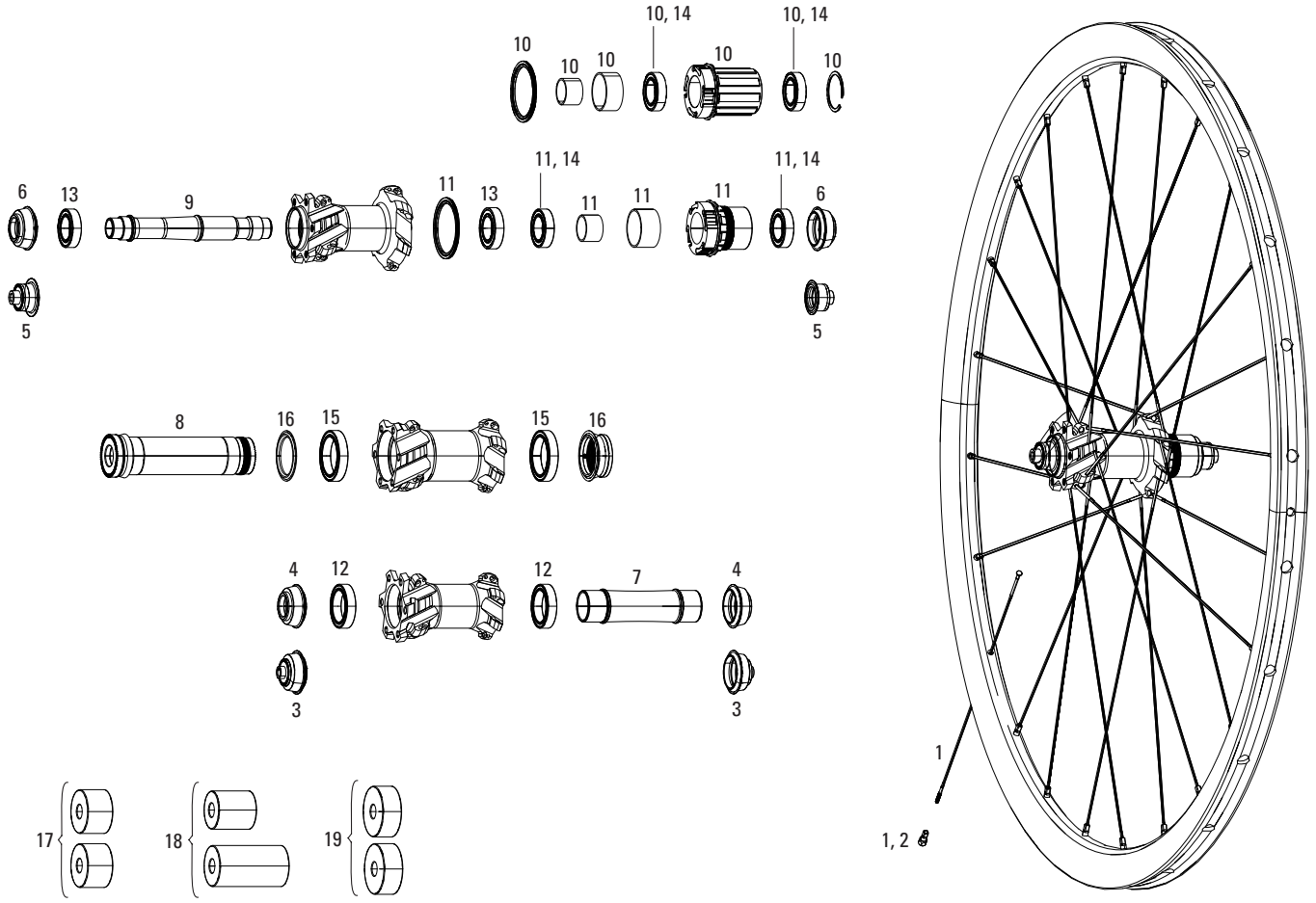

NOTES:
1. Rise XX uses X0 Hub Internals
2. All Rise XX hubs use ceramic ball bearings.

No.	Part Number	Description
1	11.1918.027.021	Spokes & Nipples 3-pack 294mm CX-Ray Straight-Pull ExternalBlack - Rise XX Predictive Steering 29”
1	11.1918.027.022	Spokes & Nipples 3-pack 296mm CX-Ray Straight-Pull ExternalBlack - Rise XX 29”
2	11.1918.033.001	Spoke Nipples Alloy for Rise 60/XX, Roam 50/60 and Rail series wheels 2.0 X 14 - QTY 24
3	00.1918.145.000	Conversion Caps Hub X0 Front, 9QR 19mm Standard - X0 Hubs/Roam30/Roam40/Rise XX
3	00.1918.145.001	Conversion Caps Hub X0 Front, 9QR 31mm RockShox - X0 Hubs/Roam30/Roam40/Rise XX
4	00.1918.145.002	Conversion Caps Hub X0 Front, 15 Through Axle - X0 Hubs/Roam30/Roam40/Rise XX
4	00.1918.145.003	Conversion Caps Hub X0 Front, 20 Through Axle - X0 Hubs/Roam30/Roam40/Rise XX
5	00.1918.145.004	Conversion Caps Hub X0 Rear, 10x135 QR, fits 9/10 Speed Driver Body - X0 Hubs/Roam30/Roam40/Rise XX
5	00.1918.145.006	Conversion Caps Hub X0 Rear, 10x135 QR, fits XD Driver Body X0 Hubs/Roam30/Roam40/Rise XX
6	00.1918.145.007	Conversion Caps Hub X0 Rear, 12x142 Through Axle, fits XD Driver Body - X0 Hubs/Roam30/Roam40/Rise XX
6	00.1918.145.009	Conversion Caps Hub X0 Rear, 12x135 Through Axle, fits 9/10Speed Driver Body - X0 Hubs/Roam30/Roam40/Rise XX
6	00.1918.145.010	Conversion Caps Hub X0 Rear, 12x142 Through Axle, fits 9/10Speed Driver Body - X0 Hubs/Roam30/Roam40/Rise XX

No.	Part Number	Description
7	11.1918.002.012	Hub Axle Front - X0 Hubs/Roam30/Roam40/Rise XX
8	11.1918.002.014	Hub Axle Front - Predictive Steering (includes axle, knurledring and plug) A1
9	11.1918.002.013	Hub Axle Rear - X0 Hubs/Roam30/Roam40/Rise XX
10	11.1918.000.011	Freehub Body with Bearings 9/10 Speed - X0 Hubs/Roam30/Roam40/Rise XX
11	11.1918.000.012	Freehub Body with Bearings 11 Speed XD - X0 Hubs/Roam30/Roam40/Rise XX
12	11.1918.003.060	Hub Bearing Set Front (includes 2-23327 CRM) - RISE XX A1
13	11.1918.003.070	Hub Bearing Set Rear (includes 1-17307 CRM, 1-17287 CRM & spacer) Rise XX A1
14	11.1918.003.090	Hub Bearing Set Freehub/XD (includes 2-17287 CRM) Rise XX A1
15	11.1918.003.100	Hub Bearing Set Front (includes 2-27.5 37 7 CRM) Rise XX PSA1
16	11.1918.034.000	Hub End Cap for Predictive Steering (includes end cap, set screw and dust shield) A1
ns	00.1915.232.010	Quick Release Pair Rise 60 Stainless
ns	00.4318.005.001	Maxle Ultimate 15mm Black - PIKE/RS1
ns	00.4318.005.002	Maxle Lite 15mm Black XC (compatible with SID/Reba/Revelation/Recon/Sektor/XC32) 15mm TA) B1
17	00.1918.177.010	Bearing Press Tool 23327, Front Hub - Rise XX/X0/Roam 40,30
18	00.1918.177.020	Bearing Press Tools 6903/63803, Rear Hub - Rise XX/X0/Roam 40,30
19	00.1918.177.030	Bearing Press Tool 275377, Predictive Steering Front Hub - Rise XX,60/X0/Roam 50
ns	00.4318.008.000	Grease Sram Butter 20ml Syringe, Friction Reducing Grease bySlickoleum - Recommended for X0 Hub Pawls, Pike and Reverb Service

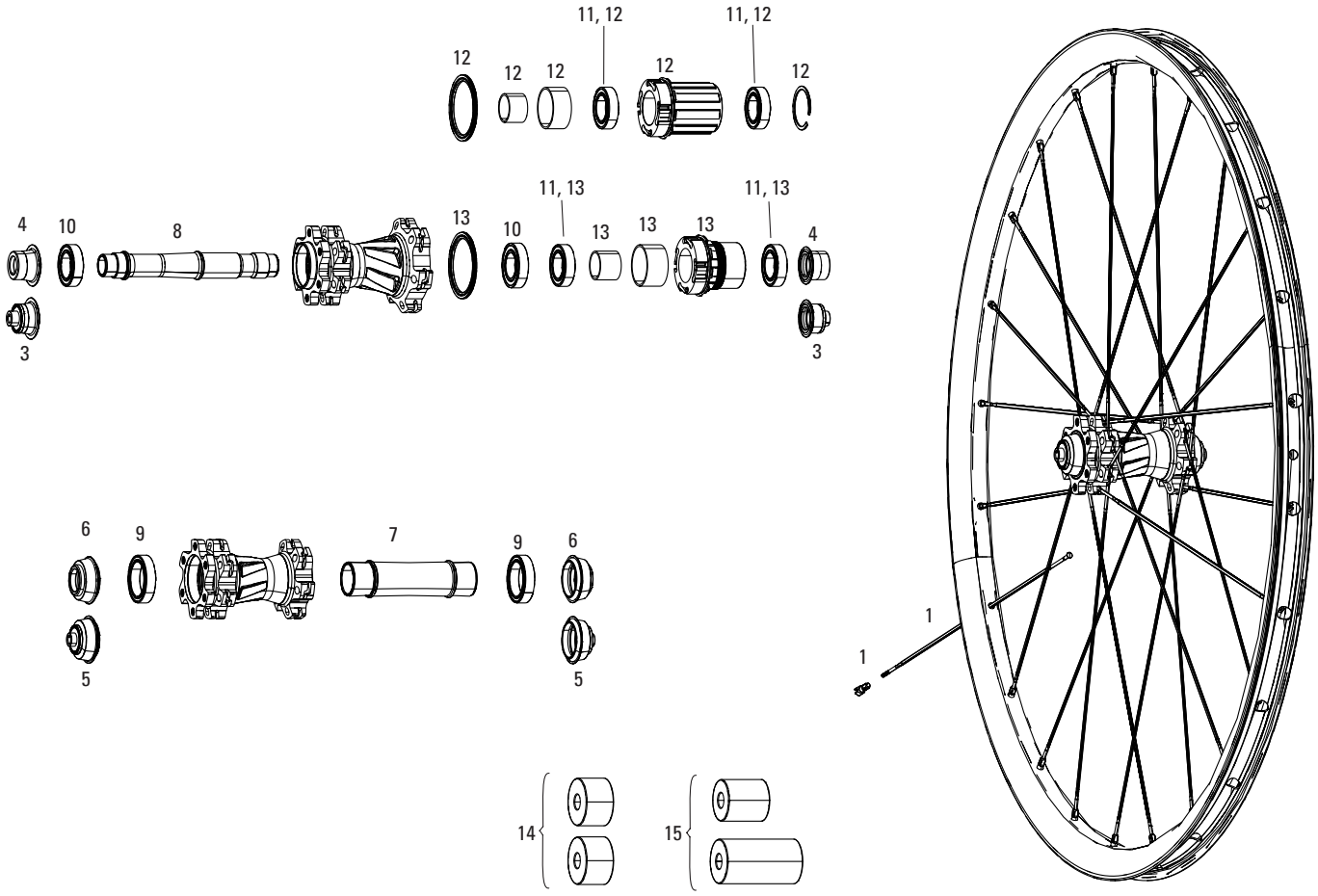

NOTES:
1. Roam 30 and 40 wheels use XO hub internals.

No.	Part Number	Description
1	11.1918.027.009	Spokes & Nipples 3-pack 264mm Straight-Pull External Black -Roam 30 26”
1	11.1918.027.010	Spokes & Nipples 3-pack 276mm Straight-Pull External Black -Roam 30 27.5”
1	11.1918.027.011	Spokes & Nipples 3-pack 294mm Straight-Pull External Black -Roam 30 29”
1	11.1918.027.012	Spokes & Nipples 3-pack 264mm Straight-Pull External Black -Roam 40 26”
1	11.1918.027.013	Spokes & Nipples 3-pack 276mm Straight-Pull External Black -Roam 40 27.5”
1	11.1918.027.014	Spokes & Nipples 3-pack 294mm Straight-Pull External Black -Roam 40 29”
1	11.1918.027.015	Spokes & Nipples 24-pack 264mm Straight-Pull External Black Roam 30 26” (includes qty for complete wheel build)
1	11.1918.027.016	Spokes & Nipples 24-pack 276mm Straight-Pull External Black Roam 30 27.5” (includes qty for complete wheel build)
1	11.1918.027.017	Spokes & Nipples 24-pack 294mm Straight-Pull External Black Roam 30 29” (includes qty for complete wheel build)
1	11.1918.027.018	Spokes & Nipples 24-pack 264mm Straight-Pull External Black Roam 40 26” (includes qty for complete wheel build)
1	11.1918.027.019	Spokes & Nipples 24-pack 276mm Straight-Pull External Black Roam 40 27.5” (includes qty for complete wheel build)
1	11.1918.027.020	Spokes & Nipples 24-pack 294mm Straight-Pull External Black Roam 40 29” (includes qty for complete wheel build)

No.	Part Number	Description
ns	11.1915.084.030	Decal Kit - Roam 30 MTB 26 Black/Red wheel (Red/White/Blackdecal) - 1 Rim
ns	11.1915.084.040	Decal Kit - Roam 30 MTB 26 Black/Silver wheel (Silver/White/Black decal) - 1 Rim
ns	11.1915.084.050	Decal Kit - Roam 30 MTB 27 Black/Red wheel (Red/White/Blackdecal) - 1 Rim
ns	11.1915.084.060	Decal Kit - Roam 30 MTB 27 Black/Silver wheel (Silver/White/Black decal) - 1 Rim
ns	11.1915.084.070	Decal Kit - Roam 30 MTB 29 Black/Red wheel (Red/White/Blackdecal) - 1 Rim
ns	11.1915.084.080	Decal Kit - Roam 30 MTB 29 Black/Silver wheel (Silver/White/Black decal) - 1 Rim
ns	11.1915.084.090	Decal Kit - Roam 40 MTB 26 Black/Red wheel (Red/White/Blackdecal) - 1 Rim
ns	11.1915.084.100	Decal Kit - Roam 40 MTB 26 Black/Silver wheel (Silver/White/Black decal) - 1 Rim
ns	11.1915.084.110	Decal Kit - Roam 40 MTB 27 Black/Red wheel (Red/White/Blackdecal) - 1 Rim
ns	11.1915.084.120	Decal Kit - Roam 40 MTB 27 Black/Silver wheel (Silver/White/Black decal) - 1 Rim
ns	11.1915.084.130	Decal Kit - Roam 40 MTB 29 Black/Red wheel (Red/White/Blackdecal) - 1 Rim
ns	11.1915.084.140	Decal Kit - Roam 40 MTB 29 Black/Silver wheel (Silver/White/Black decal) - 1 Rim
3	00.1918.145.000	Conversion Caps Hub X0 Front, 9QR 19mm Standard - X0 Hubs/Roam30/Roam40/Rise XX
3	00.1918.145.001	Conversion Caps Hub X0 Front, 9QR 31mm RockShox - X0 Hubs/Roam30/Roam40/Rise XX
4	00.1918.145.002	Conversion Caps Hub X0 Front, 15 Through Axle - X0 Hubs/Roam30/Roam40/Rise XX
4	00.1918.145.003	Conversion Caps Hub X0 Front, 20 Through Axle - X0 Hubs/Roam30/Roam40/Rise XX
5	00.1918.145.004	Conversion Caps Hub X0 Rear, 10x135 QR, fits 9/10 Speed Driver Body - X0 Hubs/Roam30/Roam40/Rise XX
5	00.1918.145.006	Conversion Caps Hub X0 Rear, 10x135 QR, fits XD Driver Body X0 Hubs/Roam30/Roam40/Rise XX
6	00.1918.145.007	Conversion Caps Hub X0 Rear, 12x142 Through Axle, fits XD Driver Body - X0 Hubs/Roam30/Roam40/Rise XX
6	00.1918.145.009	Conversion Caps Hub X0 Rear, 12x135 Through Axle, fits 9/10Speed Driver Body - X0 Hubs/Roam30/Roam40/Rise XX
6	00.1918.145.010	Conversion Caps Hub X0 Rear, 12x142 Through Axle, fits 9/10Speed Driver Body - X0 Hubs/Roam30/Roam40/Rise XX
7	11.1918.002.012	Hub Axle Front - X0 Hubs/Roam30/Roam40/Rise XX
8	11.1918.002.013	Hub Axle Rear - X0 Hubs/Roam30/Roam40/Rise XX
8	11.1918.002.015	Hub Axle Rear Trek Boost 148 (only for Boost 148 hubs) A1
9	11.1918.003.030	Hub Bearing Set Front (includes 2-23327) - X0 Hubs/Roam30/Roam40
10	11.1918.003.040	Hub Bearing Set Rear (includes 1-6903 & 1-17287) - X0 Hubs/Roam30/Roam40
11	11.1918.003.050	Hub Bearing Set Freehub/XD (includes 2-17287) - X0 Hubs/Roam30/Roam40
12	11.1918.000.011	Freehub Body with Bearings 11 Speed XD - X0 Hubs/Roam30/Roam40/Rise XX
13	11.1918.000.012	Freehub Body with Bearings 9/10 Speed - X0 Hubs/Roam30/Roam40/Rise XX
ns	00.1915.232.010	Quick Release Pair Rise 60 Stainless
ns	00.1915.002.020	Quick Release Pair X.9 Steel Black for MTB Wheels
ns	00.1918.126.001	Tubeless Kit Includes 26mm Tape, 2 Valves & 1 Valve Core Wrench (Fits 21mm inner width rims, Roam Wheels)
14	00.1918.177.010	Bearing Press Tool 23327, Front Hub - Rise XX/X0/Roam 40,30
15	00.1918.177.020	Bearing Press Tools 6903/63803, Rear Hub - Rise XX/X0/Roam 40,30
ns	00.4318.008.000	Grease Sram Butter 20ml Syringe, Friction Reducing Grease bySlickoleum - Recommended for X0 Hub Pawls, Pike and Reverb Service
ns	00.4318.005.002	Maxle Lite 15mm Black XC (compatible with SID/Reba/Revelation/Recon/Sektor/XC32) 15mm TA) B1

WHEELS - ROAM 50/60

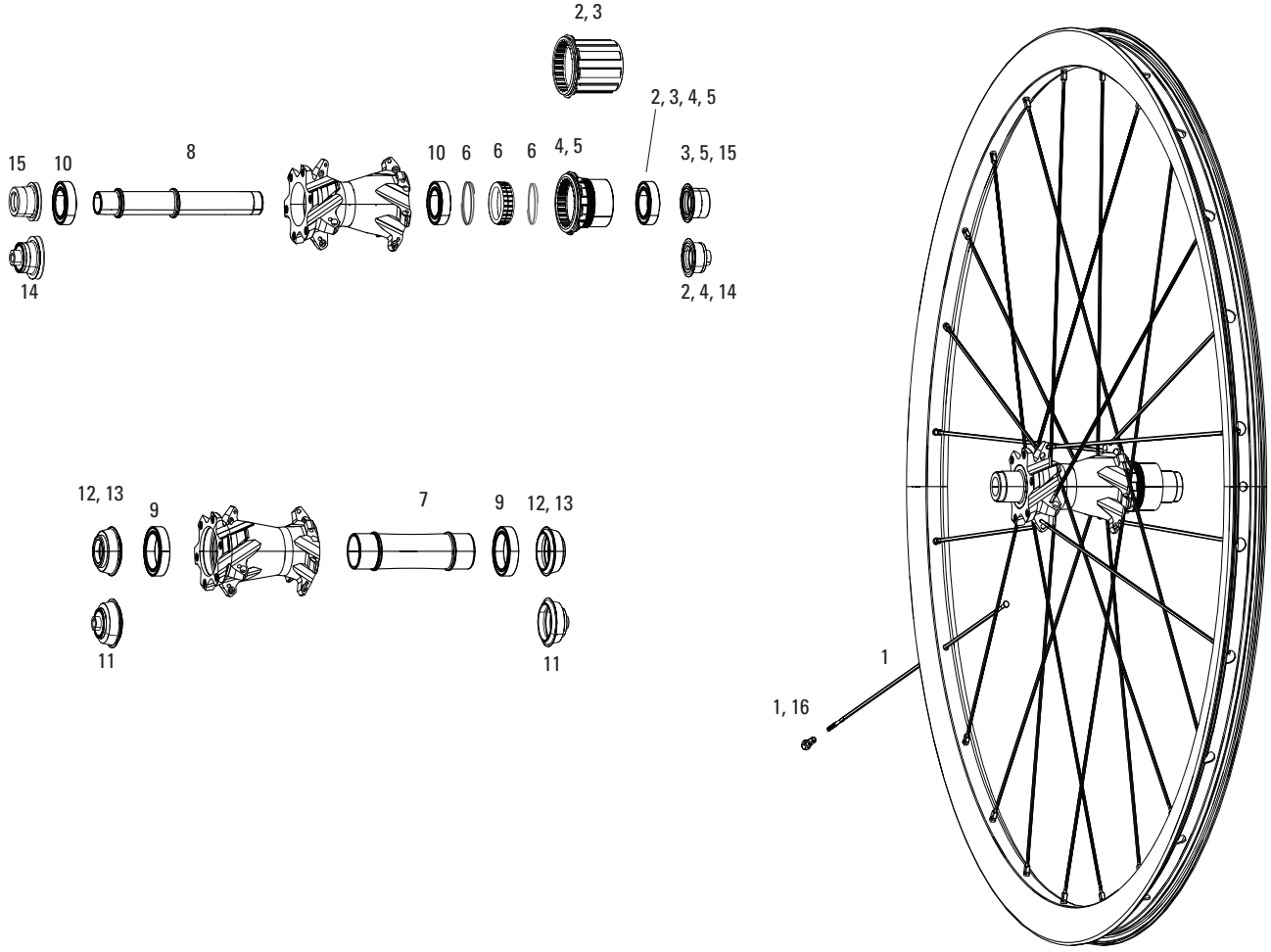

No.	Part Number	Description
1	11.1918.027.000	Spokes & Nipples & Washers 3-pack 268mm CX-Sprint Straight-Pull External Black - Roam 60 26”
1	11.1918.027.001	Spokes & Nipples & Washers 3-pack 280mm CX-Sprint Straight-Pull External Black - Roam 60 27.5”
1	11.1918.027.002	Spokes & Nipples & Washers 3-pack 298mm CX-Sprint Straight-Pull External Black - Roam 60 29”
1	11.1918.027.003	Spokes & Nipples 3-pack 270mm Bladed Straight-Pull ExternalBlack - Roam 50 26”
1	11.1918.027.004	Spokes & Nipples 3-pack 281mm Bladed Straight-Pull ExternalBlack - Roam 50 27.5”
1	11.1918.027.005	Spokes & Nipples 3-pack 300mm Bladed Straight-Pull ExternalBlack - Roam 50 29”
2	00.1918.125.015	Conversion Cap and 9/10 Speed Driver Body Wheel Roam60/50, Rail50 Rear 135/QR (DT Part No. HWYABX00S1239S)
3	00.1918.125.016	Conversion Cap and 9/10 Speed Driver Body Wheel Roam60/50, Rail50 Rear 135/12mm Thru Axle (DT Part No. HWRABX00S1239S)
3	00.1918.125.017	Conversion Cap and 9/10 Speed Driver Body Wheel Roam60/50, Rail50 Rear 142/12mm Thru Axle (DT Part No. HWRABX00S1239S)
4	00.1918.125.009	Conversion Cap and XD Driver Body Wheel Roam60/50, Rail50 Rear 135/QR (DT Part No. HWYAAX00S3115S)

WHEELS - ROAM 50/60

No.	Part Number	Description
5	00.1918.125.010	Conversion Cap and XD Driver Body Wheel Roam60/50, Rail50 Rear 135/12mm Thru Axle (DT Part No. HWYAAX00S3382S)
5	00.1918.125.011	Conversion Cap and XD Driver Body Wheel Roam60/50, Rail50 Rear 142/12mm Thru Axle (DT Part No. HWYAAX00S3188S)
6	11.1918.029.000	Star Ratchets/Springs 18T Roam 50,60/Rail 50 (DT Part No. HWTXXX00NSK24S)
6	11.1918.029.001	Star Ratchets/Springs 36T Roam 50,60/Rail 50 (DT Part No. HWDXXX00N2884S)
7	11.1918.029.002	Hub Axle Front Roam 60/Rail 50 (DT Part No. HCCXXX00S1792S)
7	11.1918.029.003	Hub Axle Front Roam 50 (DT Part No. HRCXXX00N2147S)
8	11.1918.029.004	Hub Axle Rear Roam 50,60/Rail 50 (DT Part No. HCCXXX00S2216S)
9	11.1918.029.005	Hub Bearing Set Front Roam 60/Rail 50 - 6805 Qty 2 (DT PartNo. HSBXXX00N2453S)
9	11.1918.029.006	Hub Bearing Set Front Roam 50 - 6903 Qty 2 (DT Part No. HSBXXX00N2148S)
10	11.1918.029.007	Hub Bearing Set Rear Roam 50,60/Rail 50 - 6920 Qty 2 (DT Part No. HSBXXX00N1468S)
11	00.1918.125.001	Conversion Caps Wheel Roam60/Rail50 Front 100/9mm QR 19mm (DT Part No. HWYXXX00S2479S)
11	00.1918.125.004	Conversion Caps Wheel Roam50 Front 100/9mm QR 19mm (DT Part No. N/A)
12	00.1918.125.002	Conversion Caps Wheel Roam60/Rail50 Front 100/15mm Thru Axle(DT Part No. HWYXXX00S2477S)
12	00.1918.125.005	Conversion Caps Wheel Roam50 Front 110/15mm Thru Axle (DT Part No. N/A)
13	00.1918.125.003	Conversion Caps Wheel Roam60/Rail50 Front 110/20mm Thru Axle(DT Part No. HWYXXX00S2480S)
14	00.1918.125.006	Conversion Caps Wheel Roam60/50, Rail50 Rear 135/QR (DT PartNo. HWGXXX0001528S)
14	00.1918.125.012	Conversion Caps XD Wheel Roam 60/50, Rail50 Rear 135/QR (DT Part No. HWGXXX00S3115S)
15	00.1918.125.007	Conversion Caps Wheel Roam60/50, Rail50 Rear 135/12mm Thru Axle (DT Part No. N/A)
15	00.1918.125.013	Conversion Caps XD Wheel Roam 60/50, Rail50 Rear 135/12mm Thru Axle (DT Part No. HWGXXX00S3382S)
15	00.1918.125.008	Conversion Caps Wheel Roam60/50, Rail50 Rear 142/12mm Thru Axle (DT Part No. HWGXXX0002193C)
15	00.1918.125.014	Conversion Caps XD Wheel Roam 60/50, Rail50 Rear 142/12mm Thru Axle (DT Part No. HWGXXX00S3188S)
ns	00.1915.232.010	Quick Release Pair Rise 60 Stainless
ns	00.1915.002.020	Quick Release Pair X.9 Steel Black for MTB Wheels
ns	00.1918.126.001	Tubeless Kit Includes 26mm Tape, 2 Valves & 1 Valve Core Wrench (Fits 21mm inner width rims, Roam Wheels)
16	11.1918.033.001	Spoke Nipples Alloy for Rise 60/XX, Roam and Rail series wheels 2.0 X 14 - QTY 24
ns	00.4318.005.001	Maxle Ultimate 15mm Black - PIKE/RS1
ns	00.4318.005.002	Maxle Lite 15mm Black XC (compatible with SID/Reba/Revelation/Recon/Sektor/XC32) 15mm TA) B1

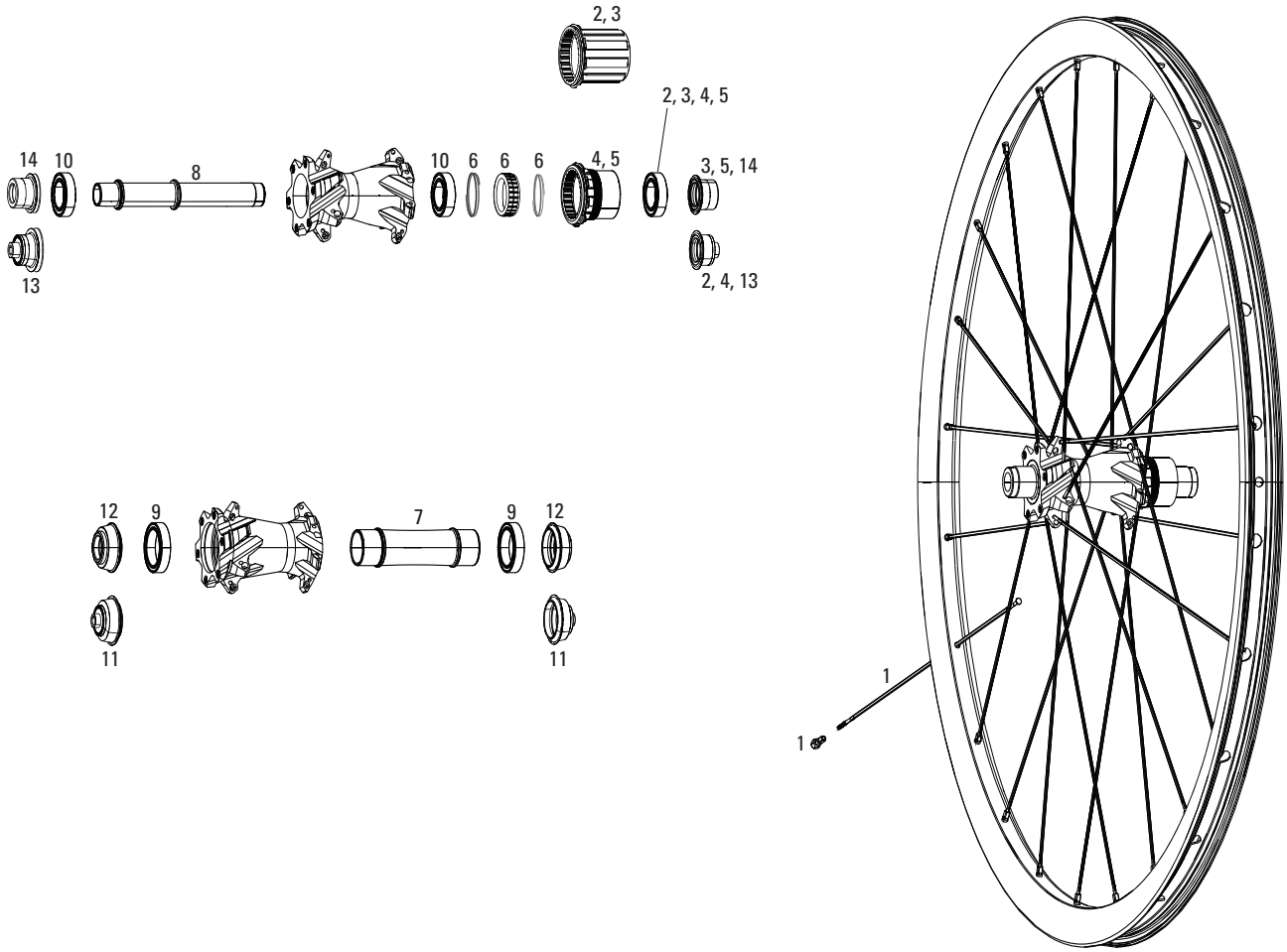

No.	Part Number	Description
1	11.1918.027.006	Spokes & Nipples 3-pack 270mm Bladed Straight-Pull ExternalBlack - Rail 50 26”
1	11.1918.027.007	Spokes & Nipples 3-pack 281mm Bladed Straight-Pull ExternalBlack - Rail 50 27.5”
1	11.1918.027.008	Spokes & Nipples 3-pack 300mm Bladed Straight-Pull ExternalBlack - Rail 50 29”
2	00.1918.125.015	Conversion Cap and 9/10 Speed Driver Body Wheel Roam60/50, Rail50 Rear 135/QR (DT Part No. HWYABX00S1239S)
3	00.1918.125.016	Conversion Cap and 9/10 Speed Driver Body Wheel Roam60/50, Rail50 Rear 135/12mm Thru Axle (DT Part No. HWRABX00S1239S)
3	00.1918.125.017	Conversion Cap and 9/10 Speed Driver Body Wheel Roam60/50, Rail50 Rear 142/12mm Thru Axle (DT Part No. HWRABX00S1239S)
4	00.1918.125.009	Conversion Cap and XD Driver Body Wheel Roam60/50, Rail50 Rear 135/QR (DT Part No. HWYAAX00S3115S)
5	00.1918.125.010	Conversion Cap and XD Driver Body Wheel Roam60/50, Rail50 Rear 135/12mm Thru Axle (DT Part No. HWYAAX00S3382S)
5	00.1918.125.011	Conversion Cap and XD Driver Body Wheel Roam60/50, Rail50 Rear 142/12mm Thru Axle (DT Part No. HWYAAX00S3188S)
6	11.1918.029.000	Star Ratchets/Springs 18T Roam 50,60/Rail 50 (DT Part No. HWTXXX00NSK24S)

No.	Part Number	Description
6	11.1918.029.001	Star Ratchets/Springs 36T Roam 50,60/Rail 50 (DT Part No. HWDXXX00N2884S)
7	11.1918.029.002	Hub Axle Front Roam 60/Rail 50 (DT Part No. HCCXXX00S1792S)
8	11.1918.029.004	Hub Axle Rear Roam 50,60/Rail 50 (DT Part No. HCCXXX00S2216S)
9	11.1918.029.005	Hub Bearing Set Front Roam 60/Rail 50 - 6805 Qty 2 (DT PartNo. HSBXXX00N2453S)
10	11.1918.029.007	Hub Bearing Set Rear Roam 50,60/Rail 50 - 6920 Qty 2 (DT Part No. HSBXXX00N1468S)
11	00.1918.125.001	Conversion Caps Wheel Roam60/Rail50 Front 100/9mm QR 19mm (DT Part No. HWYXXX00S2479S)
12	00.1918.125.002	Conversion Caps Wheel Roam60/Rail50 Front 100/15mm Thru Axle(DT Part No. HWYXXX00S2477S)
12	00.1918.125.003	Conversion Caps Wheel Roam60/Rail50 Front 110/20mm Thru Axle(DT Part No. HWYXXX00S2480S)
13	00.1918.125.006	Conversion Caps Wheel Roam60/50, Rail50 Rear 135/QR (DT PartNo. HWGXXX0001528S)
13	00.1918.125.012	Conversion Caps XD Wheel Roam 60/50, Rail50 Rear 135/QR (DT Part No. HWGXXX00S3115S)
14	00.1918.125.007	Conversion Caps Wheel Roam60/50, Rail50 Rear 135/12mm Thru Axle (DT Part No. N/A)
14	00.1918.125.013	Conversion Caps XD Wheel Roam 60/50, Rail50 Rear 135/12mm Thru Axle (DT Part No. HWGXXX00S3382S)
14	00.1918.125.008	Conversion Caps Wheel Roam60/50, Rail50 Rear 142/12mm Thru Axle (DT Part No. HWGXXX0002193C)
14	00.1918.125.014	Conversion Caps XD Wheel Roam 60/50, Rail50 Rear 142/12mm Thru Axle (DT Part No. HWGXXX00S3188S)
ns	00.1915.232.010	Quick Release Pair Rise 60 Stainless
ns	00.1915.002.020	Quick Release Pair X.9 Steel Black for MTB Wheels
ns	00.1918.126.002	Tubeless Kit Includes 28mm Tape, 2 Valves & 1 Valve Core Wrench (Fits 23mm inner width rims, Rail Wheels)
ns	00.4318.005.001	Maxle Ultimate 15mm Black - PIKE/RS1
ns	00.4318.005.002	Maxle Lite 15mm Black XC (compatible with SID/Reba/Revelation/Recon/Sektor/XC32) 15mm TA) B1

SRAM XX1 / X01 / X1 - REAR DERAILLEUR 1x11

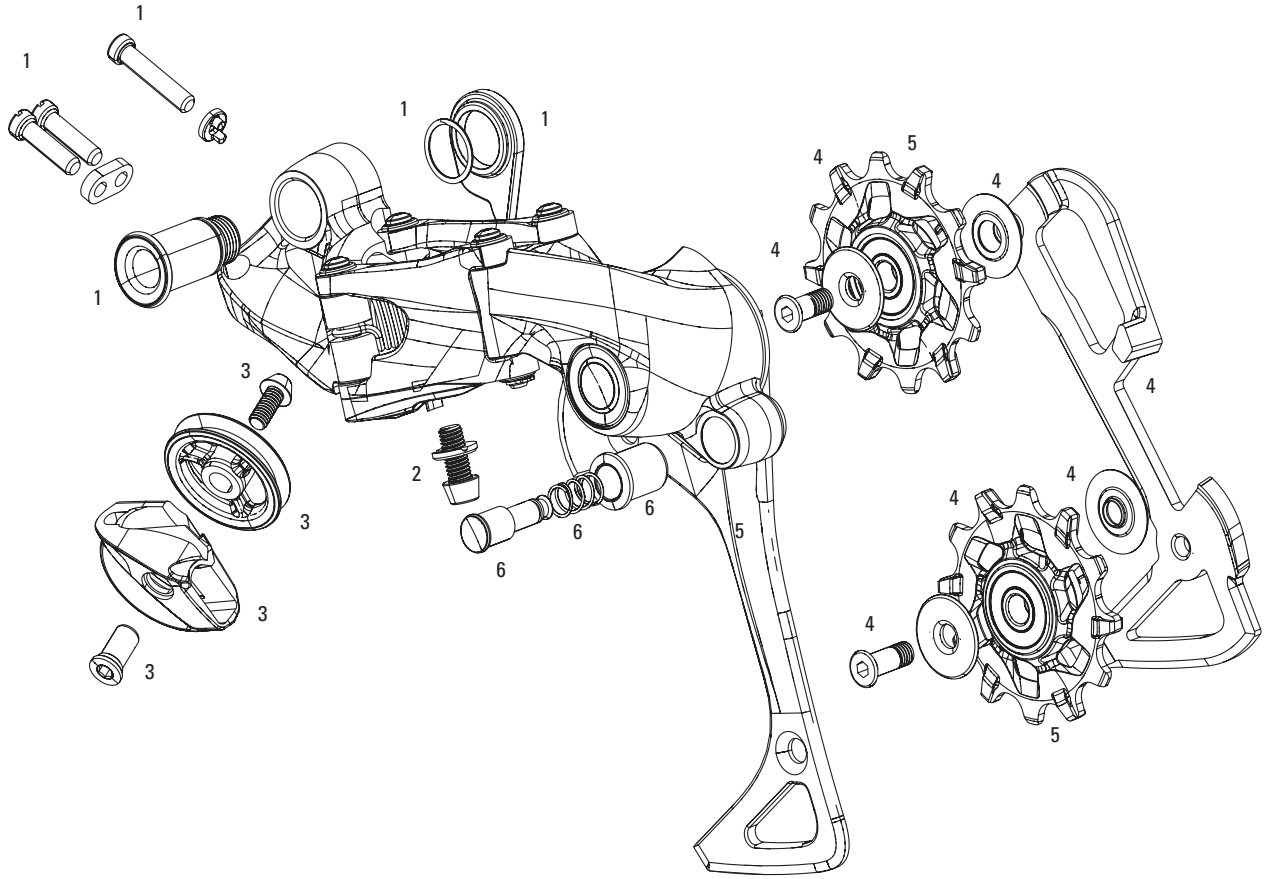

NOTE: XX1 / X01 / X1 rear derailleur is compatible with 1X11 crank and shifter only.

No.	Part Number	Description
1	11.7518.014.000	XX1/X01/X1 Rear Derailleur B-Bolt and Limit Screw Kit
1	11.7518.034.000	RD X01 and X01DH B-Screw and Limit Screw Kit
1	11.7518.033.000	X01DH 7 Speed B-Bolt Kit
1	11.7518.033.001	X01DH 10 Speed B-Bolt Kit
2	11.7518.015.000	XX1 Rear Derailleur Cable Anchor Bolt and Washer Kit
2	11.7518.028.000	X01/DH/X1 Rear Derailleur Cable Anchor Bolt and Washer Kit
3	11.7518.016.000	XX1 Rear Derailleur Cable Pulley and Guide Kit
3	11.7518.029.000	X01/DH/X1 Rear Derailleur Cable Pulley and Guide Kit
4	11.7518.017.000	XX1 Rear Derailleur 11 speed X-Sync Pulleys and Inner Cage (Outer Cage Not Replaceable)
4	11.7518.030.000	X01/DH/X1 Rear Derailleur 11 Speed X-Sync Pulleys and Inner Cage (Outer Cage Not Replaceable)
4	11.7518.031.000	X01DH Pulleys and Inner Cage - Short
4	11.7518.031.001	X01DH Pulleys and Inner Cage - Medium
5	00.7518.025.000	BlackBox Ceramic Hybrid Bearing Pulleys XX1 X-Sync 11speed
5	11.7518.032.000	RD X01/X01DH/X1/CX1 X-Sync Pulley Assembly
6	11.7518.012.000	XX1/X0/X01/X1/X9 Type 2 Cage Lock with Spring Qty 1

SRAM XX - REAR DERAILLEUR 2x10 (2010-2012)

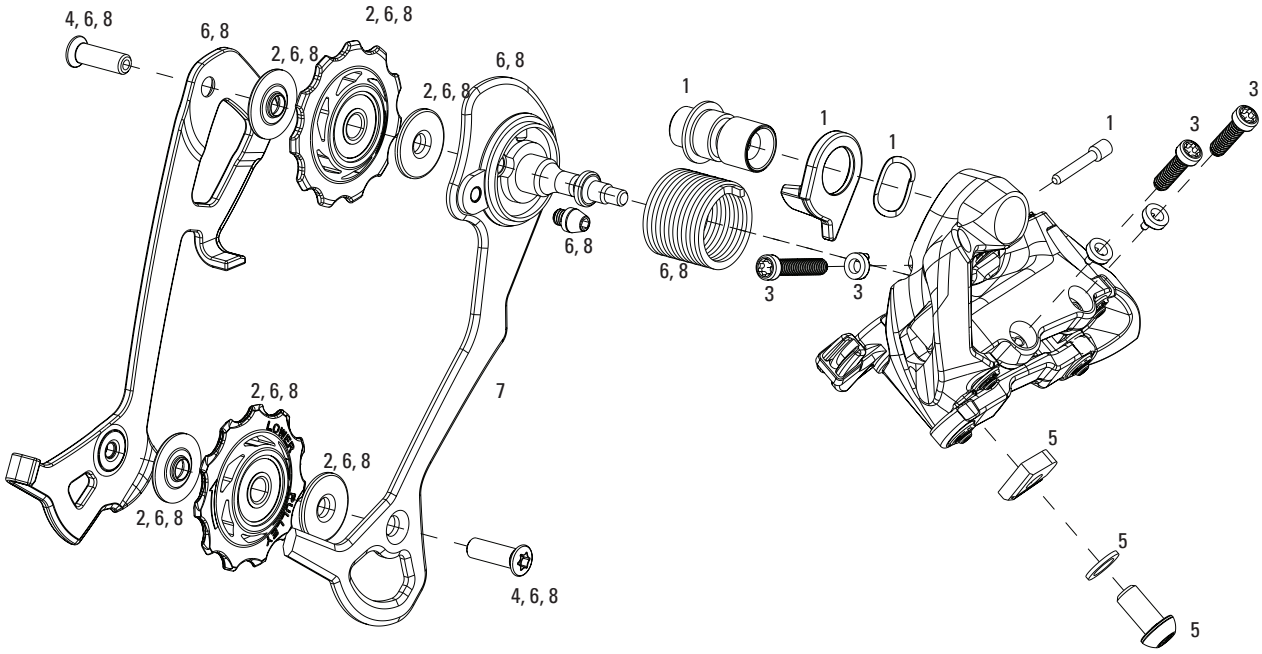

NOTE: XX rear derailleur is compatible with 10 speed exact actuation cranks and shifters only.

No.	Part Number	Description
1	11.7515.037.010	XX Rear Derailleur B-Bolt Kit
2	00.7518.014.000	BlackBox Ceramic Bearing Pulleys – AeroGlide Road
3	11.7515.040.010	XX Rear Derailleur B-Screw/Limit Screw Kit
4	11.7515.041.010	XX Rear Derailleur Cage Screw Kit
5	11.7515.042.010	XX Rear Derailleur Cable Anchor Bolt Kit
6	11.7515.043.000	XX Rear Derailleur Cage Assembly, Long
7	11.7515.044.000	XX Rear Derailleur Outer Cage and Cage Pin Long
7	11.7515.044.010	XX Rear Derailleur Outer Cage and Cage Pin Medium
8	11.7515.043.010	XX Rear Derailleur Cage Assembly, Medium

SRAM X0 / X9 / X7 TYPE 2 - REAR DERAILLEUR 2x10

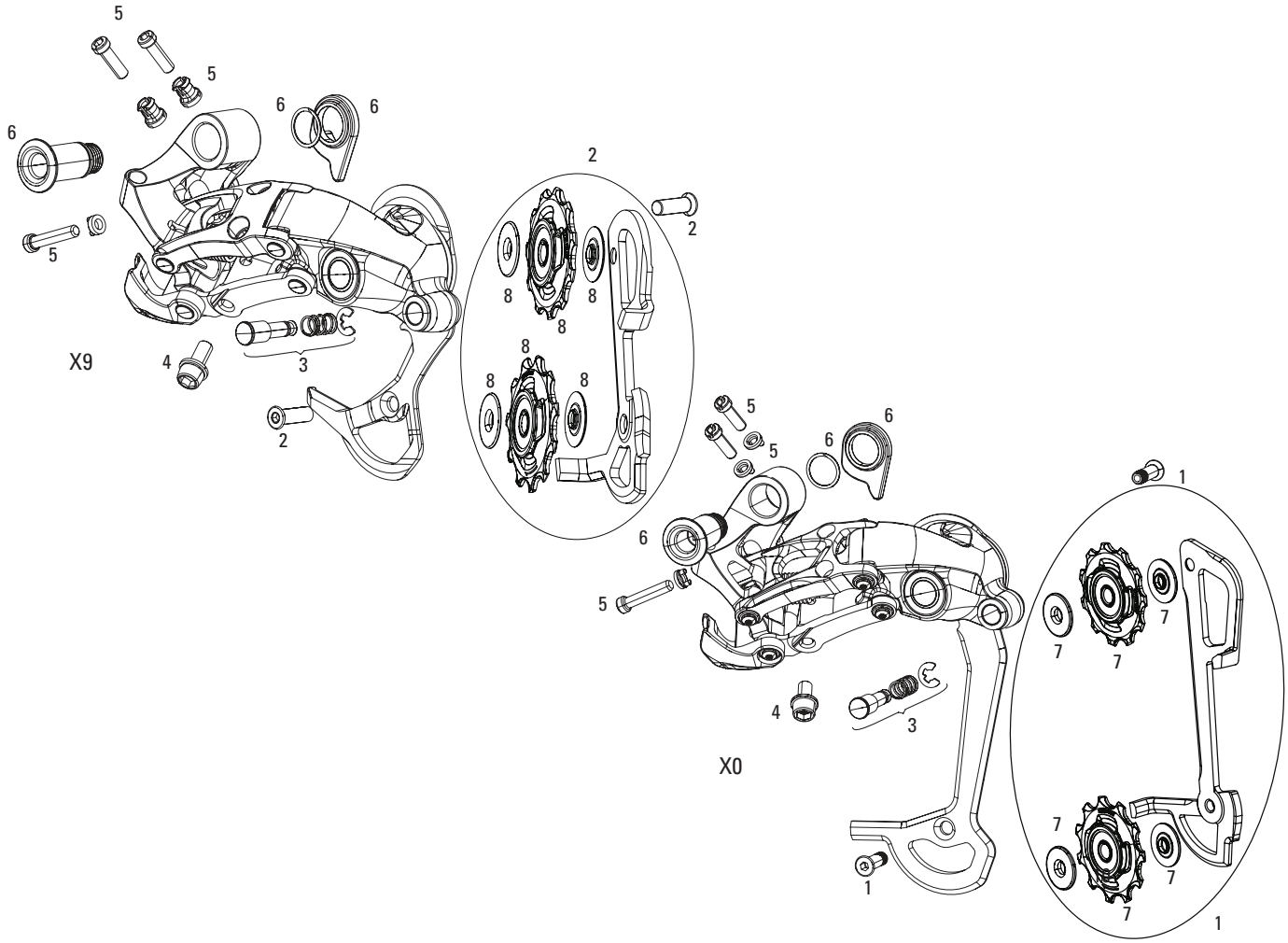

No.	Part Number	Description
1	11.7518.010.000	X0 TYPE2 Rear Derailleur Cage Kit Long (Inner Cage & Pulleys, Outer Cage Not Replaceable)
1	11.7518.010.001	X0 TYPE2 Rear Derailleur Cage Kit Medium (Inner Cage & Pulleys, Outer Cage Not Replaceable)
1	11.7518.010.002	X0 TYPE2 Rear Derailleur Cage Kit Short (Inner Cage & Pulleys, Outer Cage Not Replaceable)
2	11.7518.011.000	X9 TYPE2 Rear Derailleur Cage Kit Long (Inner Cage & Pulleys, Outer Cage Not Replaceable)
2	11.7518.011.001	X9 TYPE2 Rear Derailleur Cage Kit Medium (Inner Cage & Pulleys, Outer Cage Not Replaceable)
2	11.7518.027.000	X7 TYPE2 Rear Derailleur Cage Kit Long (Inner Cage & Pulleys, Outer Cage Not Replaceable)
2	11.7518.027.001	X7 TYPE2 Rear Derailleur Cage Kit Medium (Inner Cage & Pulleys, Outer Cage Not Replaceable)
3	11.7518.011.002	XX1/X0/X9/X7/X01 Type 2 Cage Lock with Spring Qty 1
3	11.7518.012.000	XX1/X0/X9/X7 Type 2 Cage Lock with Spring Qty 1
4	11.7515.026.000	X0 Type 2 / 06-11 X0 Rear Derailleur 10 Speed Cable Anchor Bolt/Washer, Qty 1
4	11.7515.058.000	X9 Type 2 / 11 X9 Rear Derailleur 10 Speed Cable Anchor Bolt/ Washer Kit QTY1
5	11.7515.047.000	X0 Type 2 / 11 X0 Rear Derailleur 10 Speed B Screw / Limit Screw Kit
5	11.7515.055.000	X9 Type 2 / 11 X9 Rear Derailleur 10 Speed B Screw / Limit Screw Kit
6	11.7515.049.000	X0/X9 Type 2 / 11 X0/X9 Rear Derailleur 10 Speed Hanger BoltKit
7	11.7518.018.000	X0 Type2 Rear Derailleur Pulley Kit Qty2
8	11.7518.018.001	X9/X7 Type2 Rear Derailleur Pulley Kit Qty2

SRAM X0 / X9 / X7 / ViaGT - REAR DERAILLEUR 2x10, 3x10 (2011-2013)

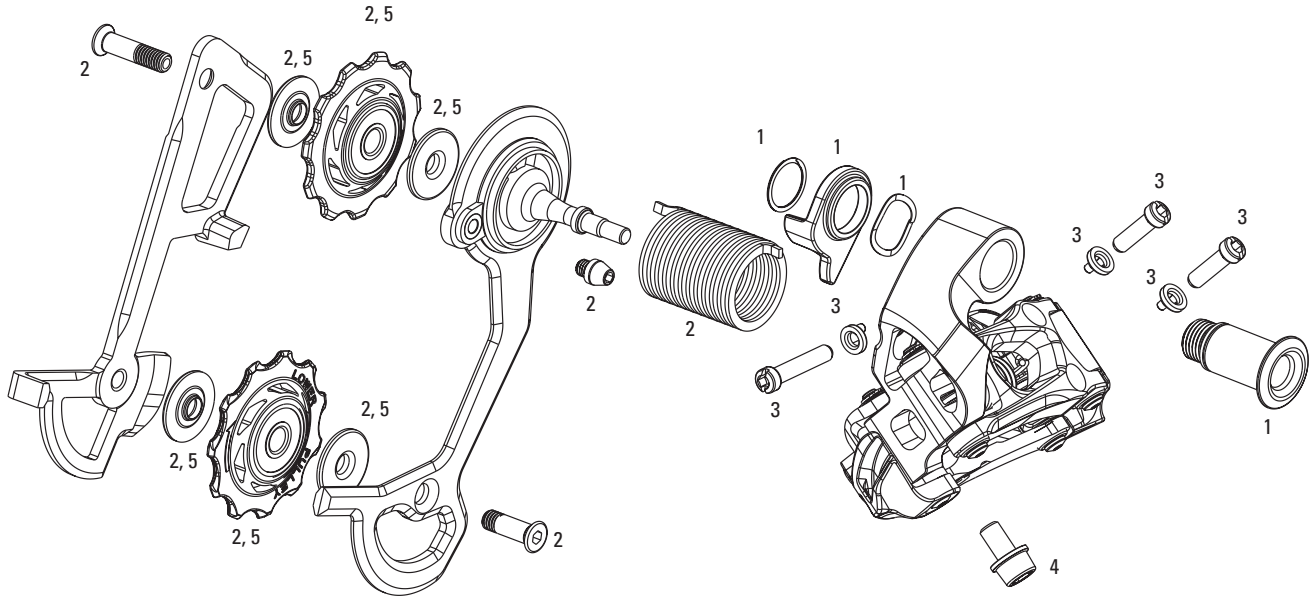

NOTE: X0, X9 and X7 rear derailleurs are compatible with 10 speed exact actuation cranks and shifters only.

No.	Part Number	Description
1	11.7515.062.000	12 Rear Derailleur X0 Silver 10 Speed Hanger Bolt Kit
1	11.7515.049.000	X0/X9 Type 2 / 11 X0/X9 Rear Derailleur 10 Speed Hanger BoltKit
1	11.7515.052.000	Rear Derailleur X7/Type2 10 Speed Hanger Bolt Kit
2	11.7515.048.120	12 Rear Derailleur X0 10 Speed Long Cage Assembly Silver
2	11.7515.048.000	11 Rear Derailleur X0 10 Speed Long Cage Assembly Black
2	11.7515.048.010	11 Rear Derailleur X0 10 Speed Long Cage Assembly Red
2	11.7515.048.130	12 Rear Derailleur X0 10 Speed Medium Cage Assembly Silver
2	11.7515.048.040	11 Rear Derailleur X0 10 Speed Medium Cage Assembly Black
2	11.7515.048.050	11 Rear Derailleur X0 10 Speed Medium Cage Assembly Red
2	11.7515.048.140	12 Rear Derailleur X0 10 Speed Short Cage Assembly Silver
2	11.7515.048.080	11 Rear Derailleur X0 10 Speed Short Cage Assembly Black
2	11.7515.048.090	11 Rear Derailleur X0 10 Speed Short Cage Assembly Red
2	11.7515.064.000	12 Rear Derailleur X0DH 10 Speed Short Cage Assembly Red
2	11.7515.064.010	12 Rear Derailleur X0DH 10 Speed Short Cage Assembly Silver
2	11.7515.056.000	11 Rear Derailleur X9 10 Speed Long Cage Assembly Grey
2	11.7515.056.010	11 Rear Derailleur X9 10 Speed Long Cage Assembly Red
2	11.7515.056.020	11 Rear Derailleur X9 10 Speed Long Cage Assembly White
2	11.7515.056.030	11 Rear Derailleur X9 10 Speed Medium Cage Assembly Grey
2	11.7515.056.040	11 Rear Derailleur X9 10 Speed Medium Cage Assembly Red
2	11.7515.056.050	11 Rear Derailleur X9 10 Speed Medium Cage Assembly White
2	11.7515.056.060	11 Rear Derailleur X9 10 Speed Short Cage Assembly Grey
2	11.7515.056.070	11 Rear Derailleur X9 10 Speed Short Cage Assembly Red
2	11.7515.056.080	11 Rear Derailleur X9 10 Speed Short Cage Assembly White
2	11.7515.051.000	11 Rear Derailleur X7 10 Speed Long Cage Assembly
2	11.7515.051.010	11 Rear Derailleur X7 10 Speed Medium Cage Assembly
2	11.7515.051.020	11 Rear Derailleur X7 10 Speed Short Cage Assembly
3	11.7515.063.000	12 Rear Derailleur X0 Silver B Screw / Limit Screw Kit
3	11.7515.047.000	X0 Type 2 / 11 X0 Rear Derailleur 10 Speed B Screw / Limit Screw Kit
3	11.7515.055.000	X9 Type 2 / 11 X9 Rear Derailleur 10 Speed B Screw / Limit Screw Kit
3	11.7515.050.000	Rear Derailleur X7/X7 Type2 10 Speed B Screw / Limit Screw Kit
3	11.7518.008.000	Via GT Rear Derailleur B-Bolt/B-Screw kit
4	11.7515.025.000	X0 Type 2 / 06-11 X0 Rear Derailleur 10 Speed Cable Anchor Bolt/Washer, Qty 1
4	11.7515.058.000	X9 Type 2 / 11 X9 Rear Derailleur 10 Speed Cable Anchor Bolt/ Washer Kit QTY1
4	11.7515.053.000	Rear Derailleur X7 Cable Anchor Bolt / Washer Kit
4	11.7518.007.000	Via GT Rear Derailleur Cable Anchor/Limit Screws kit
5	00.7915.016.010	BlackBox Ceramic Bearing Pulleys – MTN
5	11.7515.022.000	08-11 X0 Rear Derailleur Pulley Kit Qty 2
5	11.7515.038.000	10-11 X9 X7 Rear Derailleur Pulley Kit

SRAM X0 - REAR DERAILLEUR 3x9 (2006-2013)

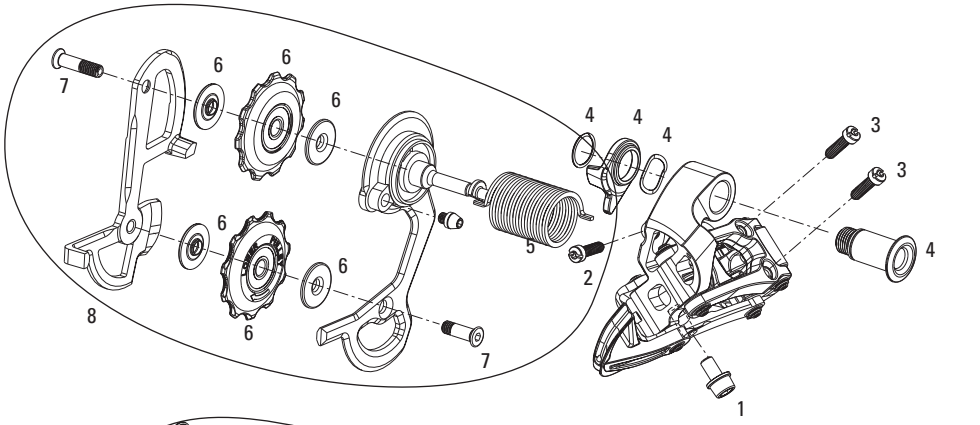

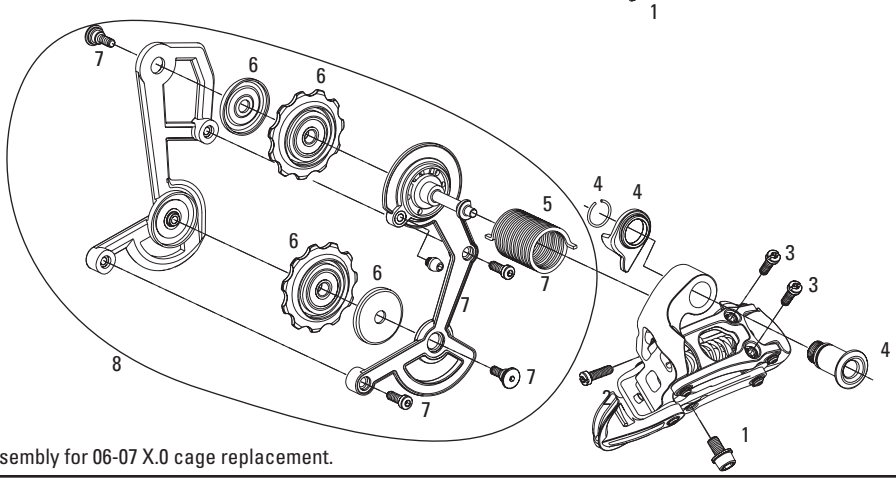

8) Use current X0 Cage assembly for 06-07 X.0 cage replacement.

No.	Part Number	Description
1	11.7515.025.000	X0 Type 2 / 06-11 X0 Rear Derailleur 10 Speed Cable Anchor Bolt/Washer, Qty 1
2	11.7515.027.000	06-09 X0 Rear Derailleur B-Adjust Screw, Qty 1
3	11.7515.028.000	06-09 X0 Rear Derailleur Limit Screws, Qty 2
4	11.7515.031.000	08 X0 Rear Derailleur Hanger Bolt Gold
4	00.0000.200.892	06-07 X0 Rear Derailleur Hanger Bolt Assy
4	11.7515.036.000	09 X0 Rear Derailleur Hanger Bolt Silver
4	11.7515.036.010	Select X0 Rear Derailleur B-Bolt Kit Red
5	11.7515.032.000	06-09 X0 Rear Derailleur Torsion Spring
6	00.0000.200.733	05-07 X0, 07-09 X9 Short Cage, 08-09 X7 Short Cage Rear Derailleur Pulley Assy
7	11.7515.022.000	08-11 X0 Rear Derailleur Pulley Kit Qty 2
8	11.7515.030.000	08-09 X0 Rear Derailleur Pulley Screws (Short/Medium, Long Cages)
8	11.7515.023.000	X0 Rear Derailleur Cage Assy, Carbon, Short (Forged Inner Cage)
8	11.7515.023.010	X0 Rear Derailleur Cage Assy, Carbon, Medium (Forged Inner Cage)
8	11.7515.023.020	X0 Rear Derailleur Cage Assy, Carbon, Long (Forged Inner Cage)
8	11.7515.023.030	Select X0 Rear Derailleur Cage Kit Carbon Short Red
8	11.7515.023.040	Select X0 Rear Derailleur Cage Kit Carbon Medium Red
8	11.7515.023.050	Select X0 Rear Derailleur Cage Kit Carbon Long Red
8	11.7515.034.000	Rear Derailleur Limit Screw Plugs Qty 10 (Red, Force, Rival,X-0)

SRAM X9 / X7 - REAR DERAILLEUR 3x9 (2010)

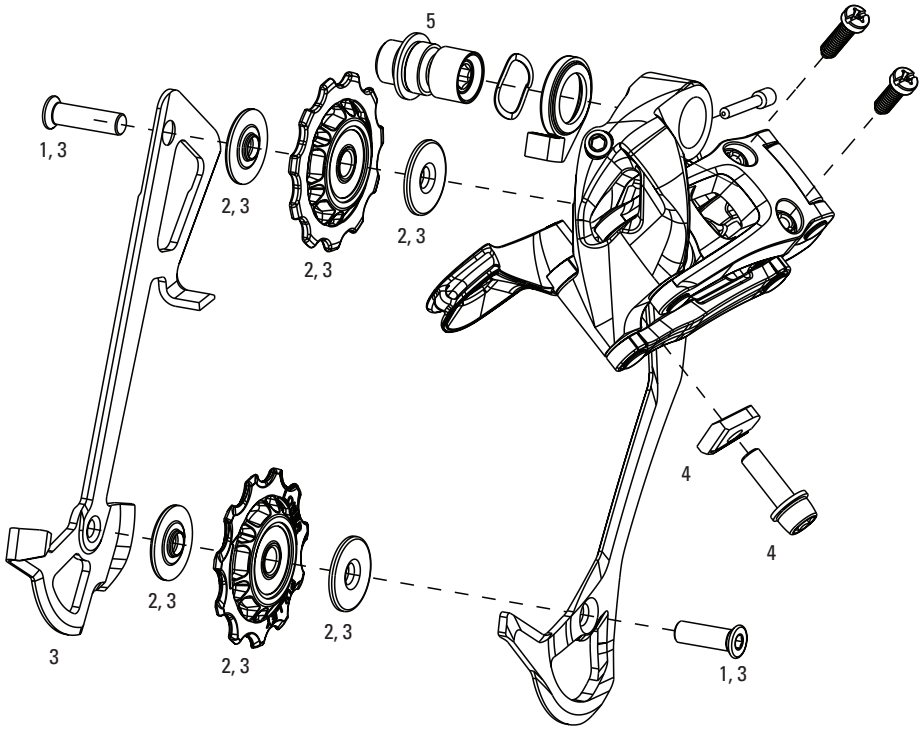

NOTE: X9 outer cage is NOT replaceable.

No.	Part Number	Description
1	11.7515.041.000	2010 X9 X7 Rear Derailleur Cage Screw Kit
2	11.7515.038.000	10-11 X9 X7 Rear Derailleur Pulley Kit
3	11.7515.039.000	2010 X9 Rear Derailleur Cage Kit Long (Inner Cage & Pulleys,Outer Cage Not Replaceable)
4	11.7515.039.010	2010 X9 Rear Derailleur Cage Kit Medium (Inner Cage & Pulleys, Outer Cage Not Replaceable)
4	11.7515.039.030	2010 X7 Rear Derailleur Cage Kit Long (Inner Cage & Pulleys,Outer Cage Not Replaceable)
4	11.7515.039.040	2010 X7 Rear Derailleur Cage Kit Medium (Inner Cage & Pulleys, Outer Cage Not Replaceable)
4	11.7515.042.000	2010 X9 Rear Deraillieur Cable Anchor Bolt Kit
5	11.7515.037.000	2010 X9 X7 Rear Derailleur B-Bolt Kit

SRAM X9 - REAR DERAILLEUR 3x9 (2007-2009)

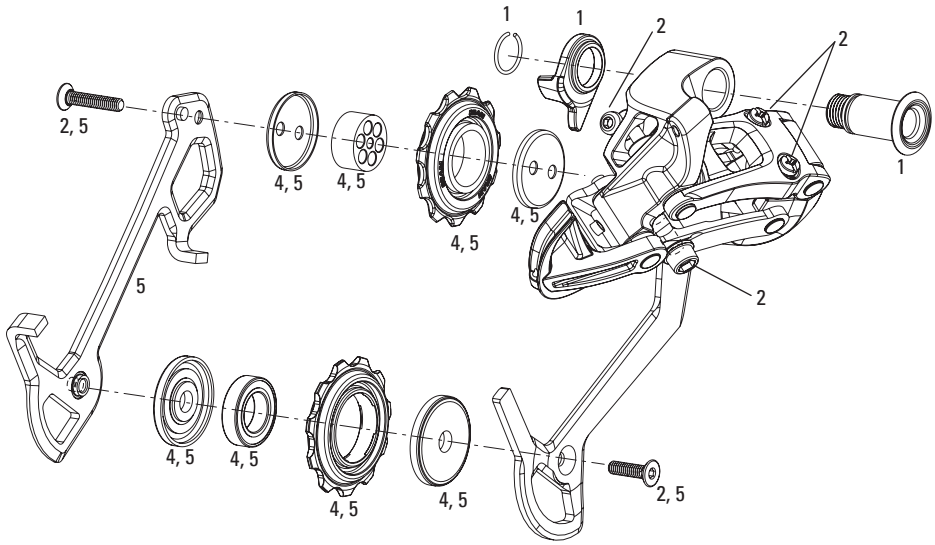

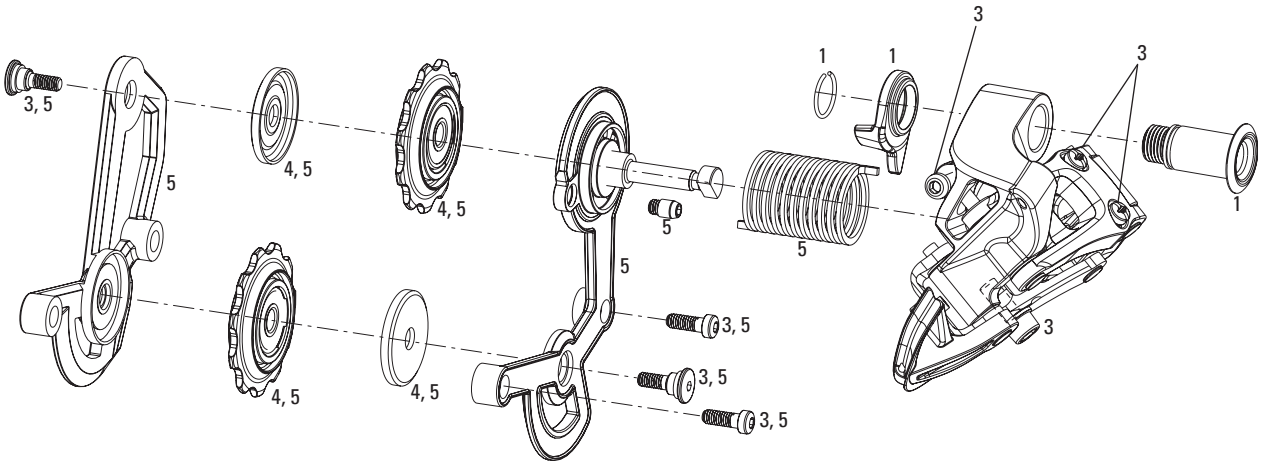

NOTE: X9 outer cage is NOT replaceable.

No.	Part Number	Description
1	11.7515.009.000	07-09 X9 Rear Derailleur Hanger Bolt
2	00.0000.200.899	05-09 X9 Rear Derailleur Screw/Bolt Kit
3	11.7515.010.000	07-09 X9 Rear Derailleur Composite Cage Screw/Bolt Kit
4	00.0000.200.615	05-09 X9 Rear Derailleur Pulley Kit (M/L Cage)
5	00.0000.200.733	05-07 X0, 07-09 X9 Short Cage, 08-09 X7 Short Cage Rear Derailleur Pulley Assy

SRAM X9 / SRAM X7 DUALDRIVE 27 - REAR DERAILLEUR 3x9 (2005-2006)

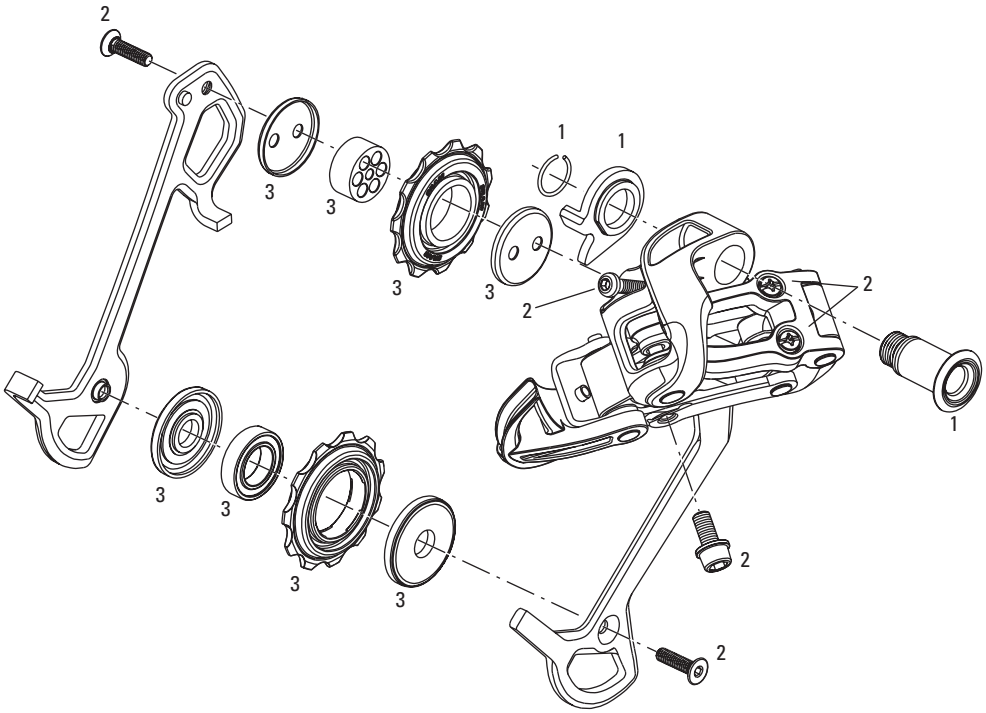

No.	Part Number	Description
1	00.0000.200.715	04-05 X7/X9/Dual Drive27/9/7/5 Rear Derailleur Hanger Bolt
1	00.0000.200.898	06-09 X7/X9/Dual Drive27 Rear Derailleur Hanger Bolt
2	00.0000.200.899	05-09 X9 Rear Derailleur Screw/Bolt Kit
2	00.0000.200.900	06-09 X7/Dual Drive27, 04-05 X7/X9/Dual Drive27/9/7/5 Rear Derailleur Screw/Bolt Kit
3	00.0000.200.615	05-09 X9 Rear Derailleur Pulley Kit (M/L Cage)
3	00.0000.200.618	04-09 X7/Dual Drive27, SX5, 08-09 X5 Rear Derailleur Pulley Kit Qty 2

SRAM X7 - REAR DERAILLEUR 3x9 (2007-2009)

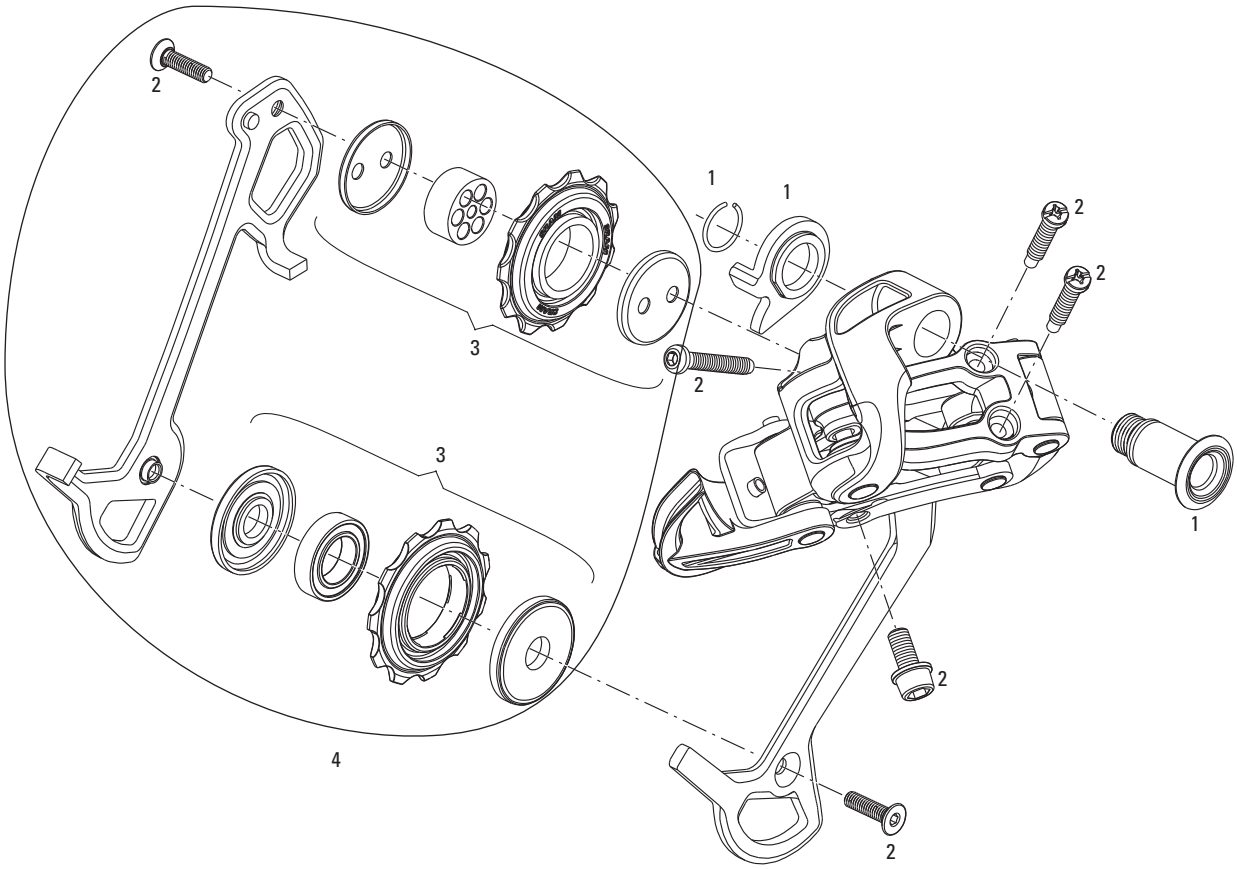

No.	Part Number	Description
1	00.0000.200.898	06-09 X7/X9/Dual Drive27 Rear Derailleur Hanger Bolt
2	00.0000.200.900	06-09 X7/Dual Drive27, 04-05 X7/X9/Dual Drive27/9/7/5 Rear Derailleur Screw/Bolt Kit
3	00.0000.200.618	04-09 X7/Dual Drive27, SX5, 08-09 X5 Rear Derailleur Pulley Kit Qty 2
4	00.0000.200.733	05-07 X0, 07-09 X9 Short Cage, 08-09 X7 Short Cage Rear Derailleur Pulley Assy

SRAM X9 / SRAM X7 (2004-2009)
9.0SL / 9.0 / 7.0 / 5.0 / DUALDRIVE 27 (2004-2009) - REAR DERAILLEUR 3x9

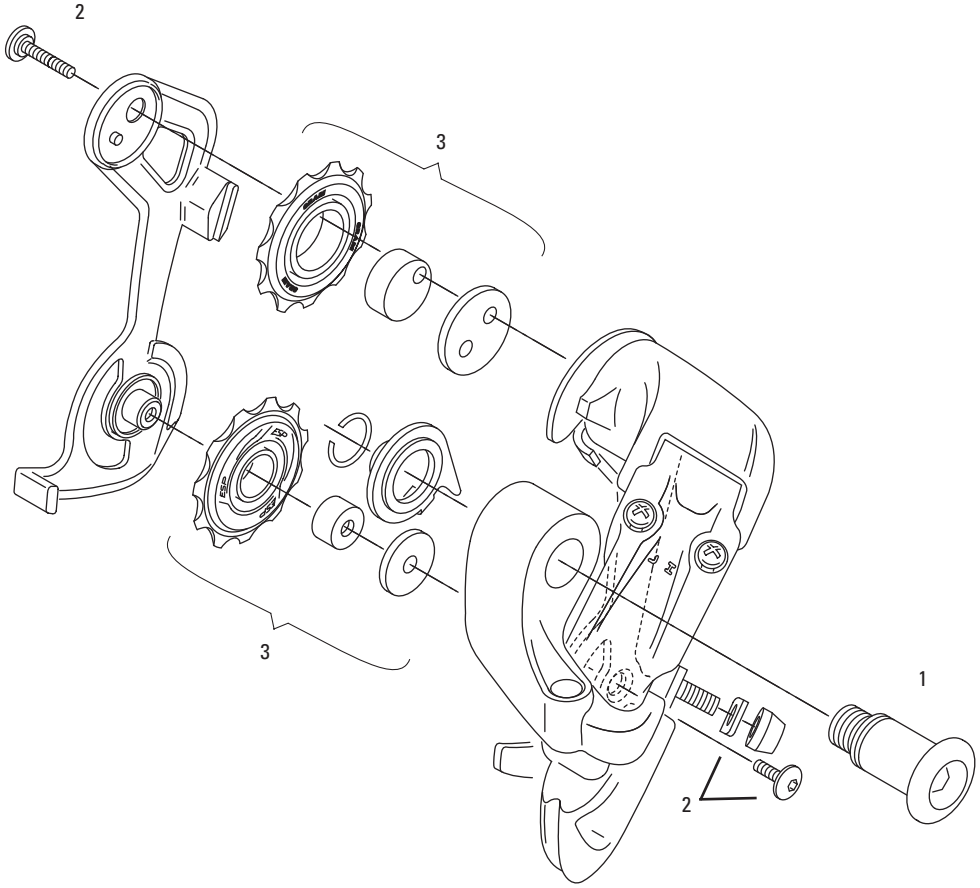

No.	Part Number	Description
1	00.0000.200.715	04-05 X7/X9/Dual Drive27/9/7/5 Rear Derailleur Hanger Bolt
1	00.0000.200.898	06-09 X7/X9/Dual Drive27 Rear Derailleur Hanger Bolt
2	00.0000.200.899	05-09 X9 Rear Derailleur Screw/Bolt Kit
2	00.0000.200.900	06-09 X7/Dual Drive27, 04-05 X7/X9/Dual Drive27/9/7/5 Rear Derailleur Screw/Bolt Kit
3	00.0000.200.615	05-09 X9 Rear Derailleur Pulley Kit (M/L Cage)
3	00.0000.200.618	04-09 X7/Dual Drive27, SX5, 08-09 X5 Rear Derailleur Pulley Kit Qty 2

SRAM X5 (2012) - REAR DERAILLEUR 2x10 / 3x10
X5 (2008-2010) X4/ SX5/ SX4/ DUALDRIVE 24 / DUALDRIVE 21 - REAR DERAILLEUR 3x9

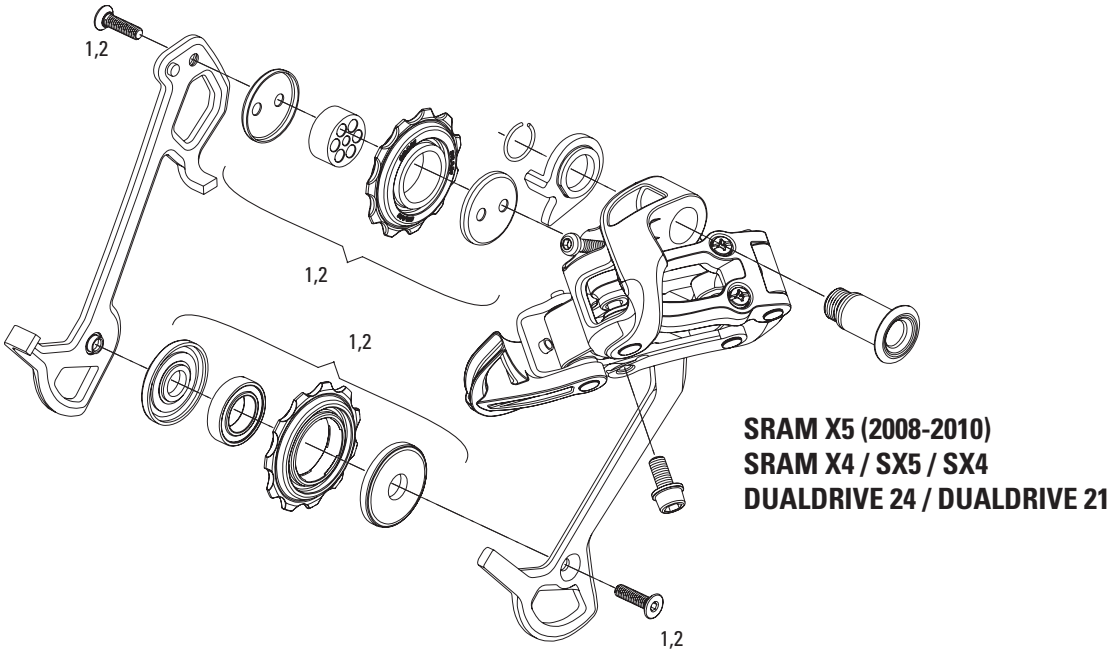

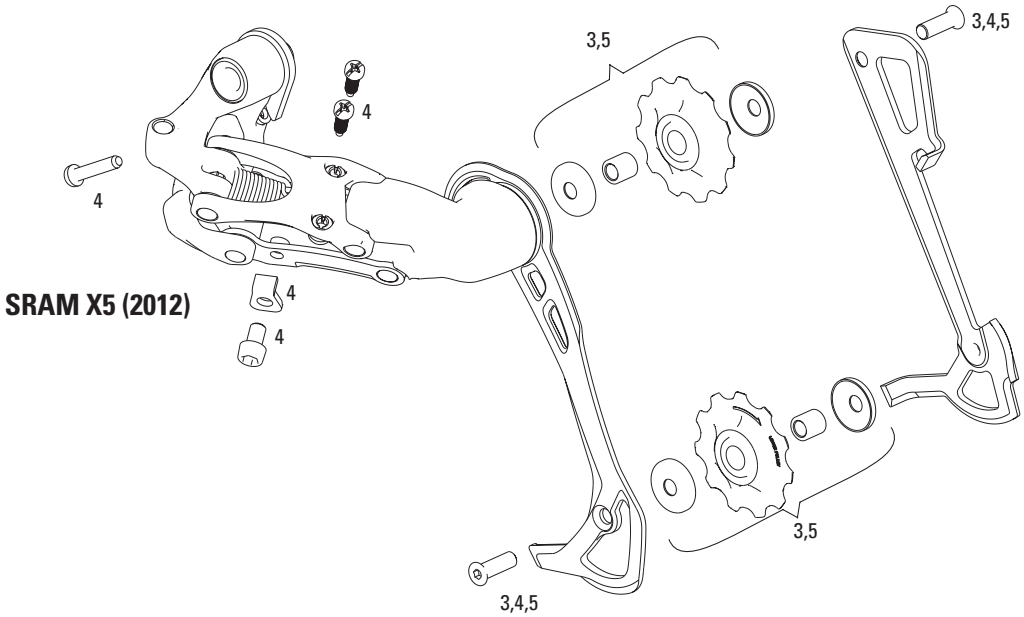

NOTE: X5 outer cage is NOT replaceable.

No.	Part Number	Description
1	00.0000.200.912	X.4/Sx4 Rear Derailleur Pulley Assy
2	00.0000.200.618	04-09 X7/Dual Drive27, SX5, 08-09 X5 Rear Derailleur Pulley Kit Qty 2
3	11.7518.019.000	X5 Rear Derailleur Pulley Kit Qty2
4	11.7515.067.000	12 Rear Derailleur X5 Screw Kit
5	11.7515.066.000	12 Rear Derailleur X5 10 Speed Medium Cage Assembly (Inner Cage & Pulleys, Outer Cage Not Replaceable)
5	11.7515.066.010	12 Rear Derailleur X5 10 Speed Long Cage Assembly (Inner Cage & Pulleys, Outer Cage Not Replaceable)
ns	11.7515.065.000	12 Rear Derailleur X5 10 Speed Hanger Bolt Kit

5.0 - REAR DERAILLEUR 3x9

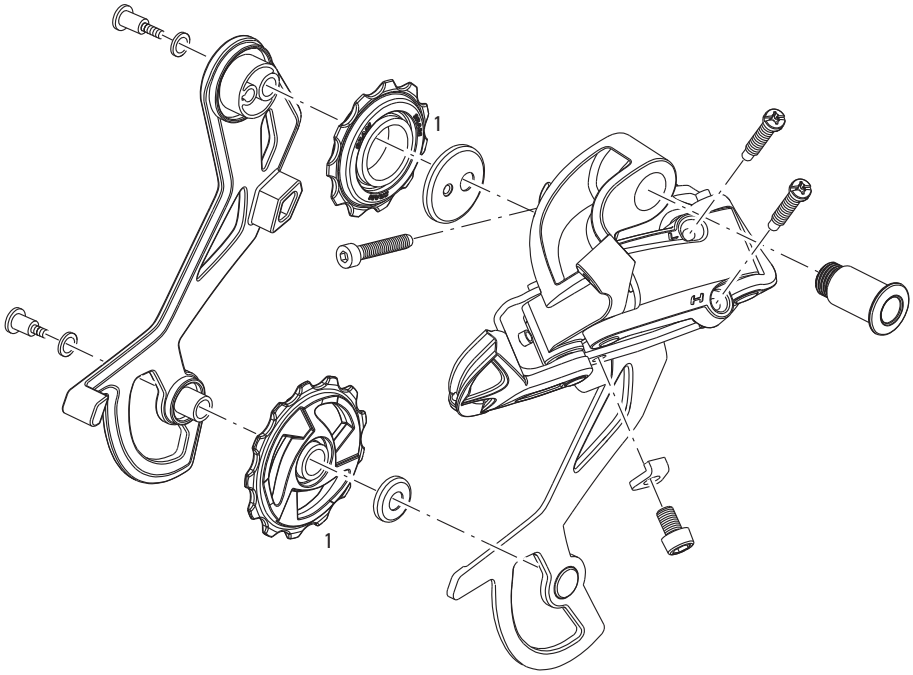

No.	Part Number	Description
1	00.0000.200.616	(04) 5.0 Rear Derailleur Pulley Assy

SRAM XX - FRONT DERAILLEUR 2x10 (2010-2012)

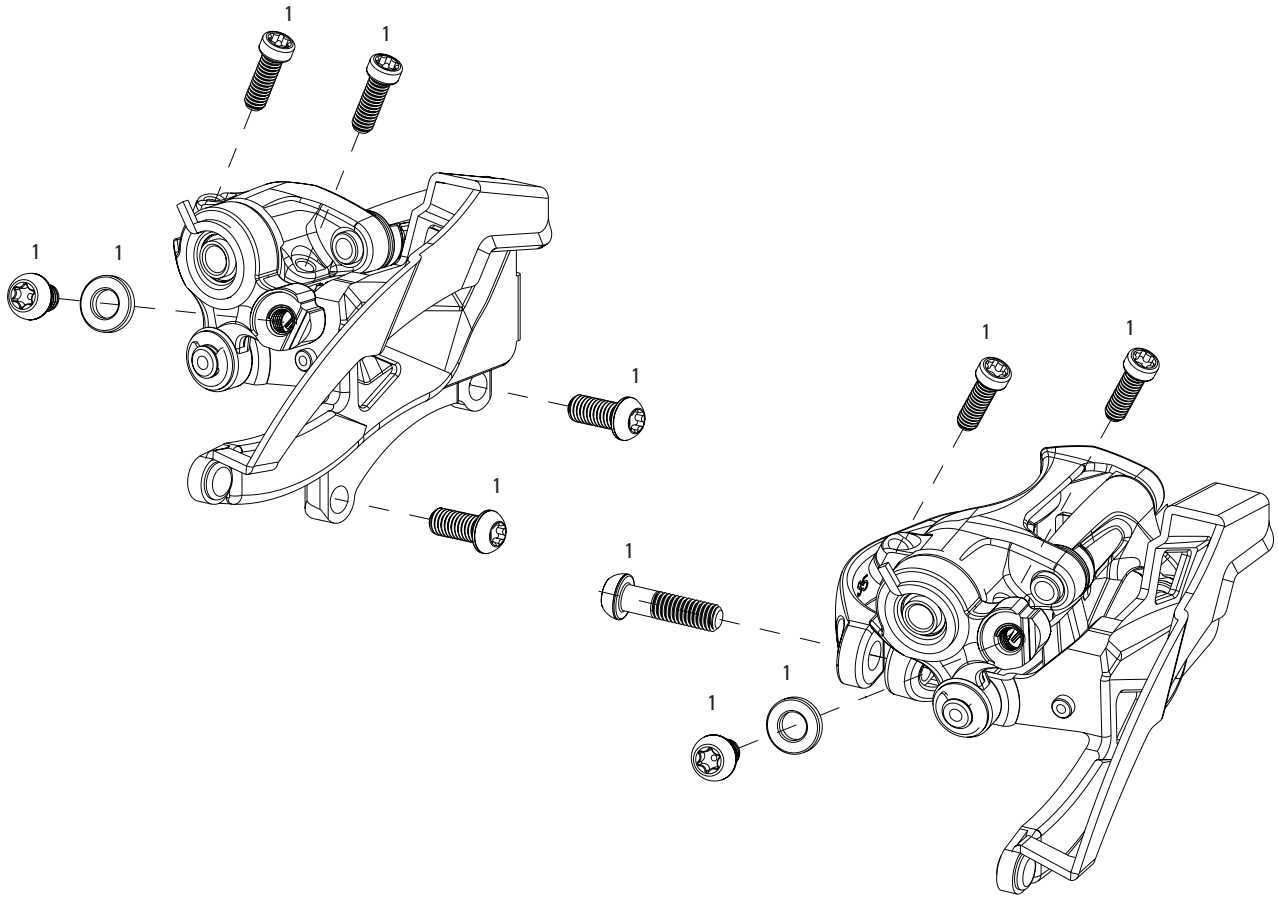

NOTE: XX front derailleur is compatible with XX 10 speed cassette, XX crank and XX shifters only.
Low clamp and direct mount pictured.

No.	Part Number	Description
1	11.7615.015.010	XX Front Derailleur Screw Kit, Low Clamp and Direct Mount
ns	11.7615.015.020	XX Front Derailleur Screw Kit, High Clamp
ns	11.7615.015.000	XX Front Derailleur 31.8 Low Clamp Shim

SRAM X0 / X9 / ViaGT - FRONT DERAILLEUR 2x10, 3x10 (2011-2012)

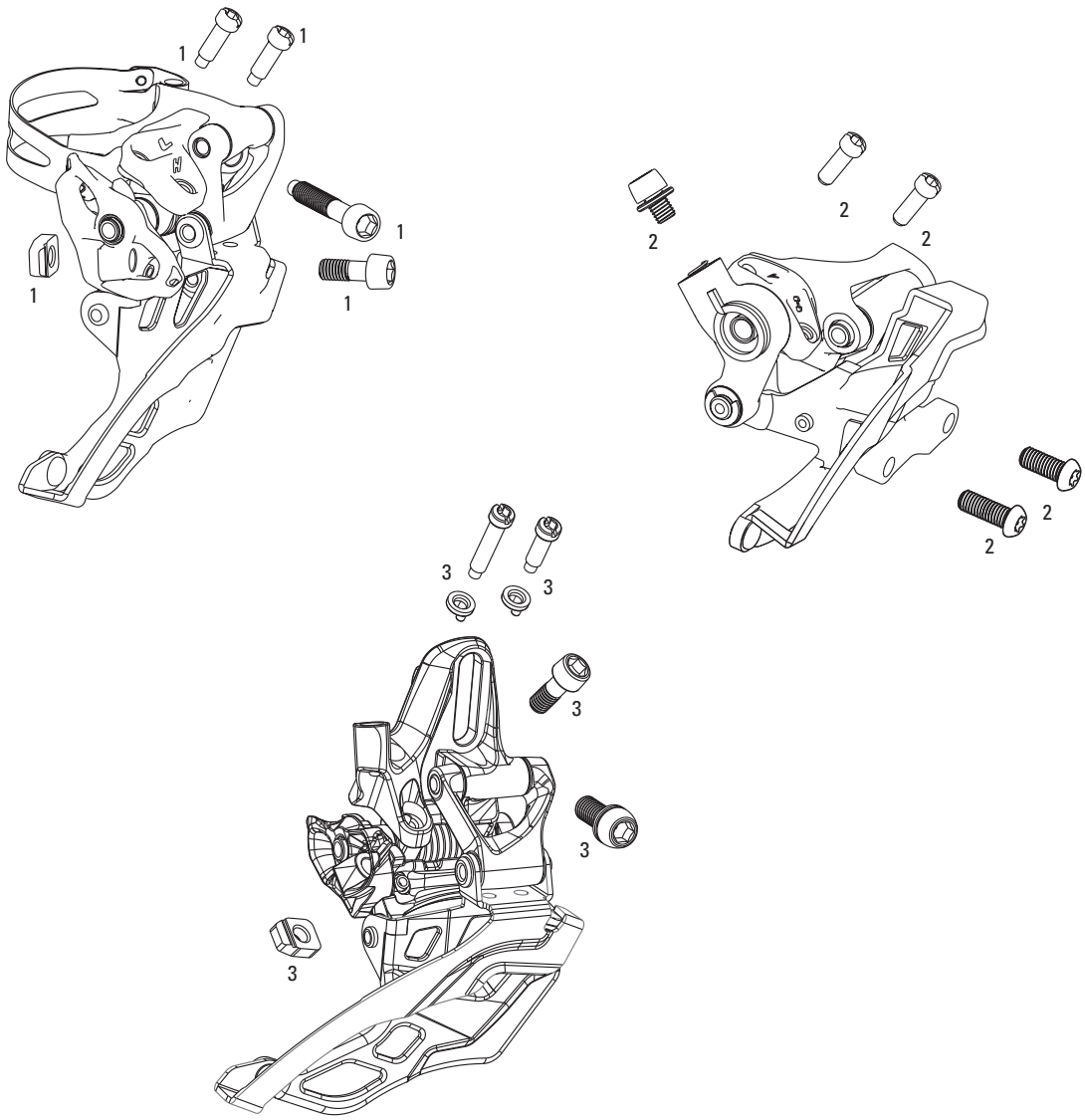

No.	Part Number	Description
1	11.7615.016.000	11 Front Derailleur X0/X9 High Clamp Screw Kit
2	11.7615.018.000	11 Front Derailleur X0/X9 Low Clamp Screw Kit
3	11.7615.017.000	11 Front Derailleur X0/X9 High Direct Mount Dual Pull Screw Kit
ns	11.7615.019.000	11 Front Derailleur X0/X9 Low Direct Mount S1 S3 Screw Kit

SRAM X9 - FRONT DERAILLEUR 3x9 (2007-2010)

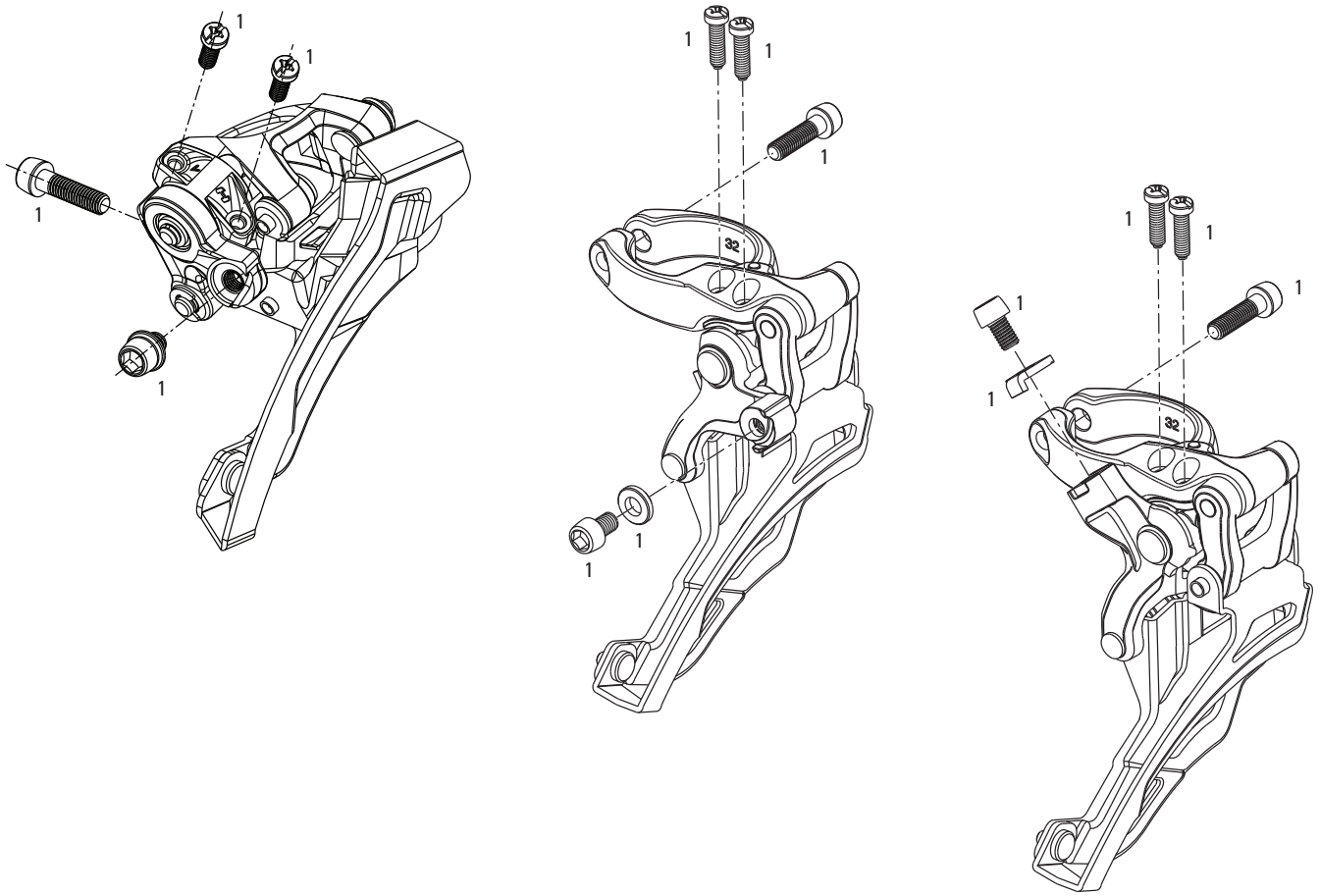

No.	Part Number	Description
1	11.7615.007.000	X9 Front Derailleur High Clamp Bolt/Screw Kit

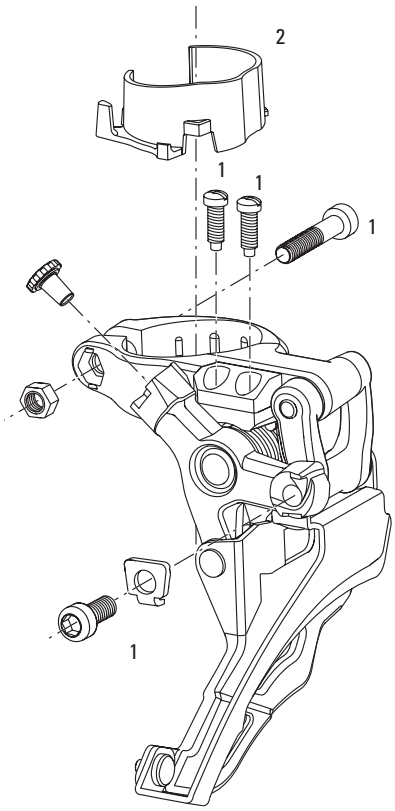

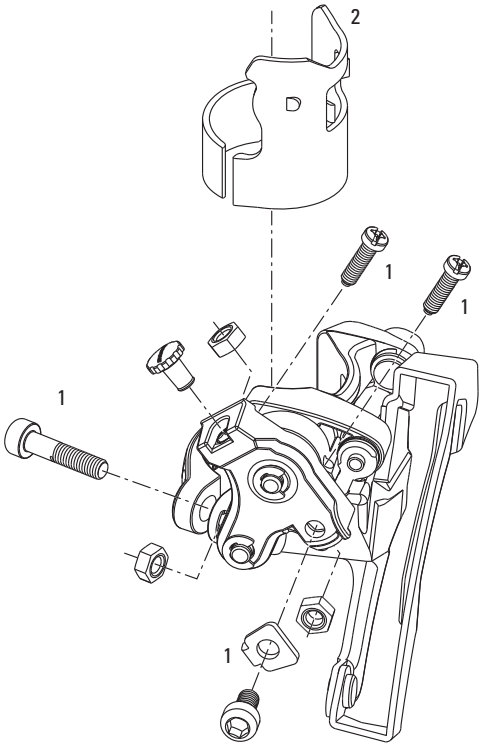

No.	Part Number	Description
1	11.7618.002.000	Via GT Front Derailleur High Clamp Screw Kit
1	11.7618.002.001	Via GT Front Derailleur Low Clamp Screw Kit
2	00.0000.200.114	X7 / XGen Front Derailleur Clamp Adaptor 31.8mm
2	00.0000.200.115	X7 / XGen Front Derailleur Clamp Adaptor 28.6mm

SRAM XX1 / X01- TRIGGER SHIFTER 1x11

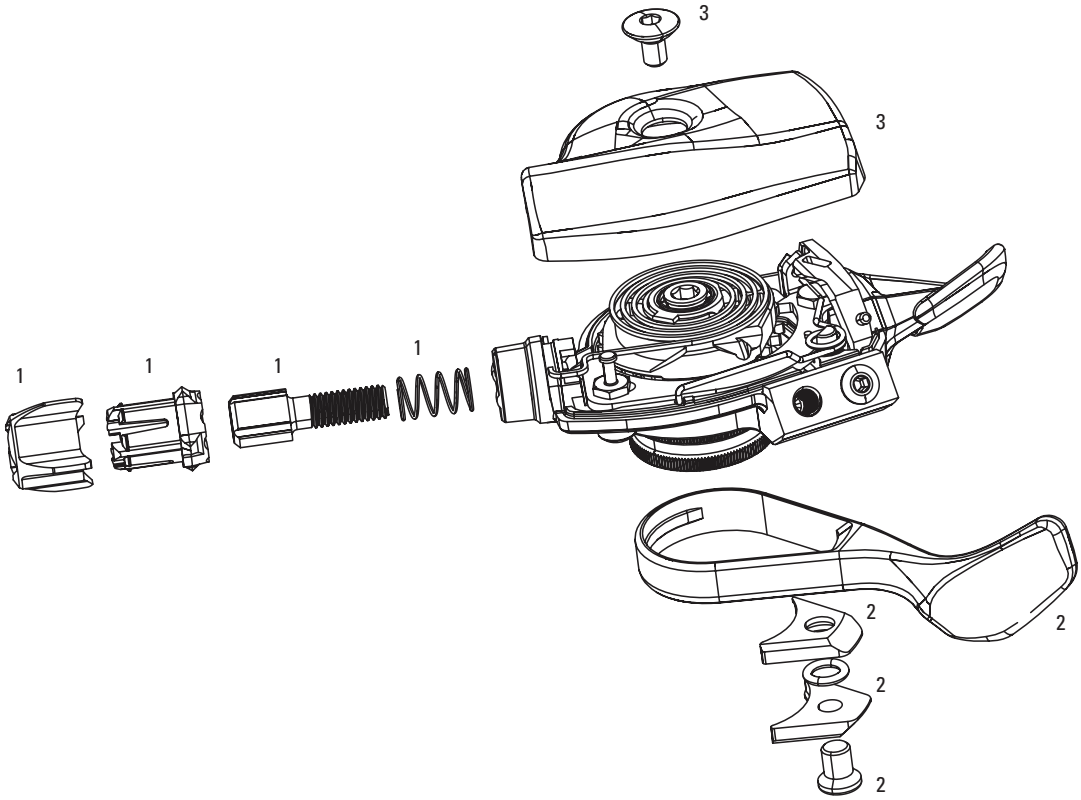

No.	Part Number	Description
1	11.7018.012.000	XX1 Trigger Barrel Adjuster Kit
2	11.7018.013.000	XX1 Trigger Pull Lever Kit, Right
2	11.7018.032.000	X01 Trigger Pull Lever Kit, Right
3	11.7018.014.000	XX1 Trigger Cover Kit, Right
3	11.7018.033.000	X01 Trigger Cover Kit Black, Right
3	11.7018.033.001	X01 Trigger Cover Kit Red, Right
3	11.7018.035.000	X01DH Trigger Cover Kit Right Black
3	11.7018.035.001	X01DH Trigger Cover Kit Right Red

SRAM XX - TRIGGER SHIFTER 2x10 (2010-2012)

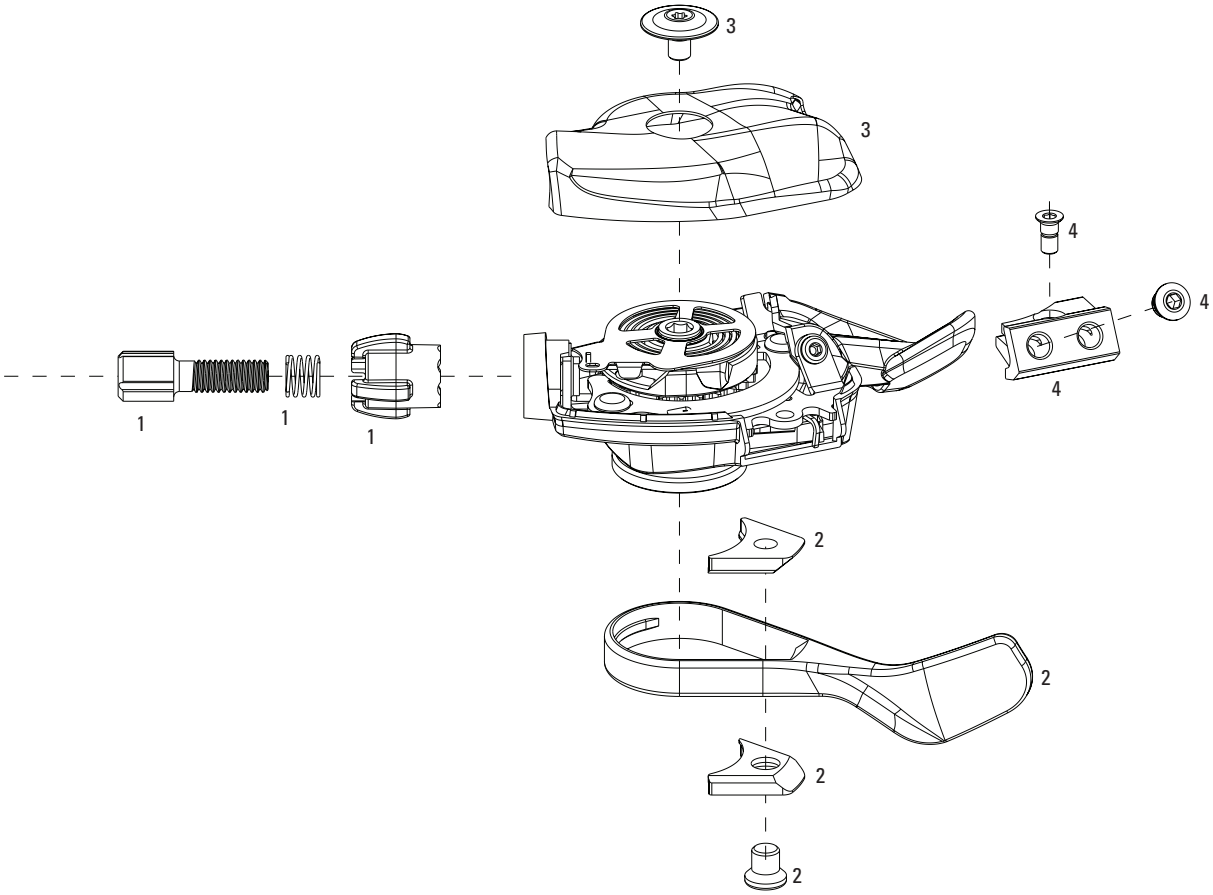

No.	Part Number	Description
1	11.7015.059.000	XX Trigger Barrel Adjuster Kit
2	11.7015.060.000	XX Trigger Pull Lever Kit, Left
2	11.7015.060.010	XX Trigger Pull Lever Kit, Right
3	11.7015.061.000	XX Trigger Cover Kit, Left
3	11.7015.061.010	XX Trigger Cover Kit, Right
4	11.7015.062.000	XX Trigger Clamp Bracket Kit, Left
4	11.7015.062.010	XX Trigger Clamp Bracket Kit, Right
ns	11.7015.074.000	XX Trigger Clamp/Bolt Kit qty 1

SRAM X0 / X9 / X7 B1- TRIGGER SHIFTER 2x10, 3x10

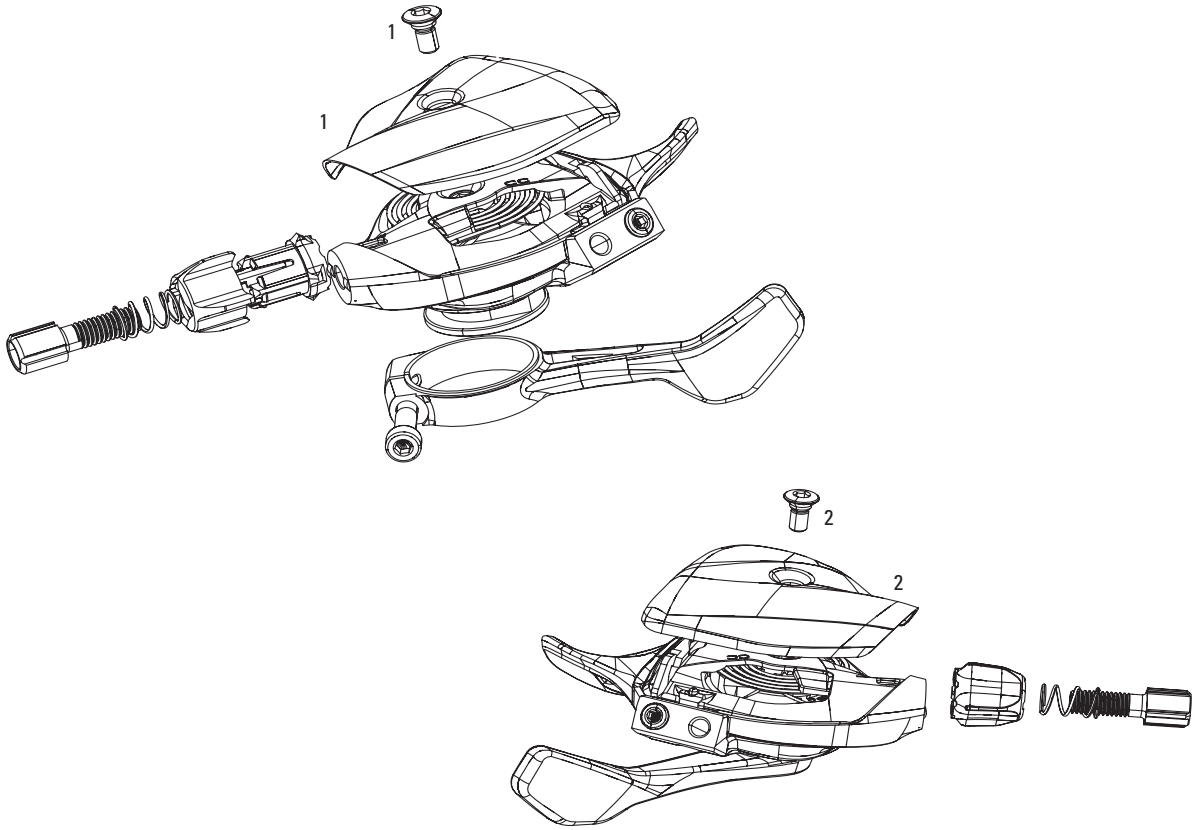

No.	Part Number	Description
1	11.7018.028.000	X0 Trigger Cover Kit Left 2 Speed Red B1
1	11.7018.028.001	X0 Trigger Cover Kit Left 3 Speed Red B1
1	11.7018.028.003	X0 Trigger Cover Kit Left 2 Speed Black B1
1	11.7018.028.005	X0 Trigger Cover Kit Left 2 Speed Silver B1
1	11.7018.028.006	X0 Trigger Cover Kit Left 3 Speed Silver B1
1	11.7018.029.000	X9 Trigger Cover Kit Left 2 Speed Grey B1
1	11.7018.029.001	X9 Trigger Cover Kit Left 3 Speed Grey B1
1	11.7018.030.000	X7 Trigger Cover Kit Left 2 Speed Storm Grey B1
1	11.7018.030.001	X7 Trigger Cover Kit Left 3 Speed Storm Grey B1
2	11.7018.028.002	X0 Trigger Cover Kit Right 10 Speed Red B1
2	11.7018.028.004	X0 Trigger Cover Kit Right 10 Speed Black B1
2	11.7018.028.007	X0 Trigger Cover Kit Right 10 Speed Silver B1
2	11.7018.029.002	X9 Trigger Cover Kit Right 10 Speed Grey B1
2	11.7018.030.002	X7 Trigger Cover Kit Right 10 Speed Storm Grey B1

SRAM X0 - TRIGGER SHIFTER 2x10, 3x10 (2011-2012)

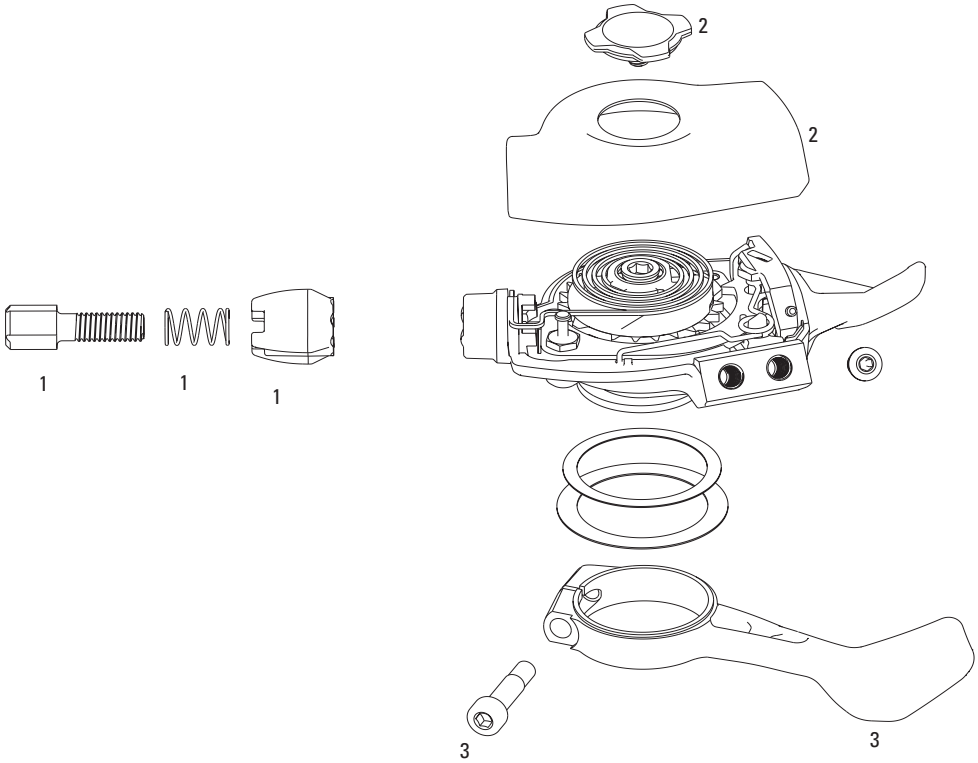

No.	Part Number	Description
1	11.7015.068.000	11 Shifter Trigger X0 10 Speed Barrel Adjuster Kit
1	11.7015.056.000	11 SL X9 10-11 X7 Barrel Adjuster Qty 2
1	11.7015.068.000	11 Shifter Trigger X0 10 Speed Barrel Adjuster Kit
2	11.7015.069.120	12 X0 Trigger Cover Kit Right Silver
2	11.7015.069.000	11 X0 Trigger Cover Kit Right Red
2	11.7015.069.030	11 X0 Trigger Cover Kit Right Black
2	11.7015.069.130	12 X0 Trigger Cover Kit Left 3Speed Silver
2	11.7015.069.040	11 X0 Trigger Cover Kit Left 3Speed Red
2	11.7015.069.070	11 X0 Trigger Cover Kit Left 3Speed Black
2	11.7015.069.140	12 X0 Trigger Cover Kit Left 2Speed Silver
2	11.7015.069.080	11 X0 Trigger Cover Kit Left 2Speed Red
2	11.7015.069.110	11 X0 Trigger Cover Kit Left 2Speed Black
3	11.7015.070.060	12 X0 Trigger Pull Lever Kit Right Silver
3	11.7015.070.020	11 X0 Trigger Pull Lever Kit Right Black
3	11.7015.070.070	12 X0 Trigger Pull Lever Kit Left Silver
3	11.7015.070.050	11 X0 Trigger Pull Lever Kit Left Black
3	11.7015.033.070	Trigger Clamp/Bolt Kit Shiny Black Qty 1

SRAM X0 - TRIGGER SHIFTER 3x9 (2006-2012)

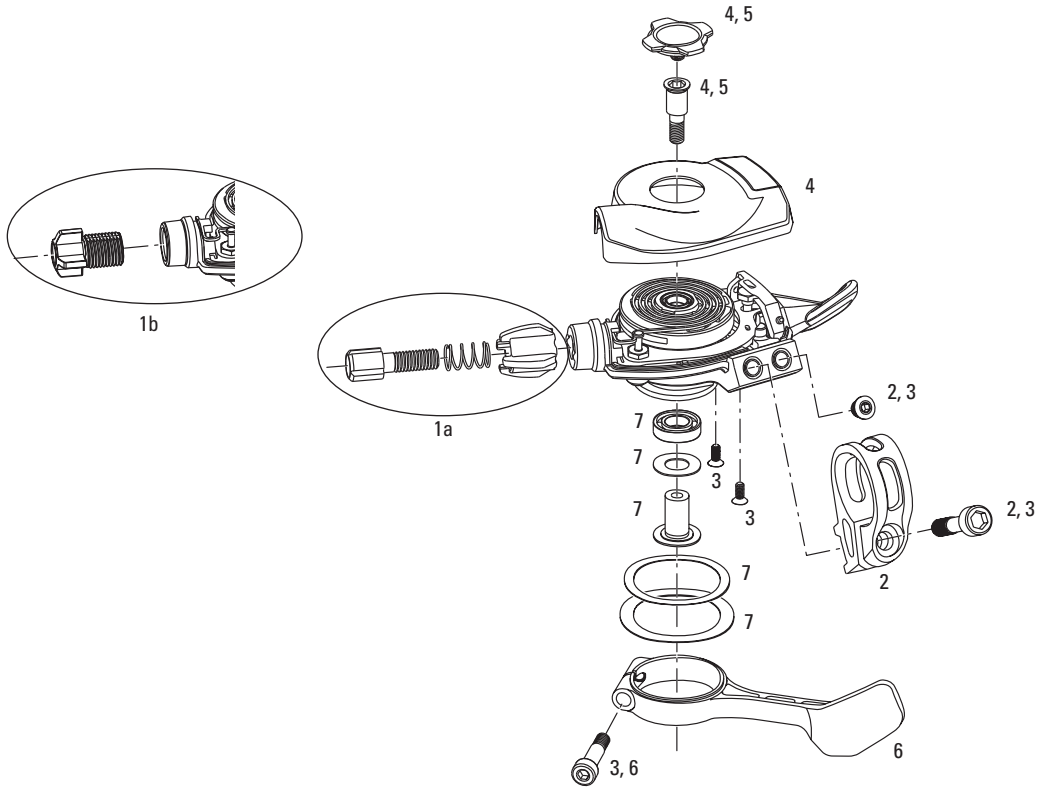

No.	Part Number	Description
1a	11.7015.024.000	07-09 X0/X9 Trigger Barrel Adjuster Qty 2 (M6, 3PC)
1b	11.7015.025.000	06-07 X0 / 07 X9 Trigger Barrel Adj Qty 2 (M10, 2PC)
2	11.7015.033.000	07-09 X0/X9/X7 Trigger Clamp/Bolt Kit, Qty 1
2	11.7015.033.020	Select X0 Trigger Clamp Kit Red Qty 1
3	00.0000.200.916	X0 Trigger Bolt/Screw Kit, Qty 1
4	00.0000.200.917	X0 Trigger Carbon Cover/Top Cap Kit, Left
4	00.0000.200.918	X0 Trigger Carbon Cover/Top Cap Kit, Right
4	11.7015.054.000	Select X0 Trigger Cover Kit Left Red
4	11.7015.054.050	Select X0 Trigger Cover Kit Right Red
4	00.0000.200.929	X0 Trigger Cover Top Cap, Qty 2
5	00.0000.200.923	X0 Trigger Pull Lever, Left
5	00.0000.200.924	X0 Trigger Pull Lever, Right
5	11.7015.055.000	Select X0 Trigger Pull Lever Kit Left Red
5	11.7015.055.050	Select X0 Trigger Pull Lever Kit Right Red
6	00.0000.200.930	X0 Trigger Service Kit, Qty 1

SRAM X9 / X7 / X5 / ViaGT - TRIGGER SHIFTER 2x10, 3x10 (2011-2012)

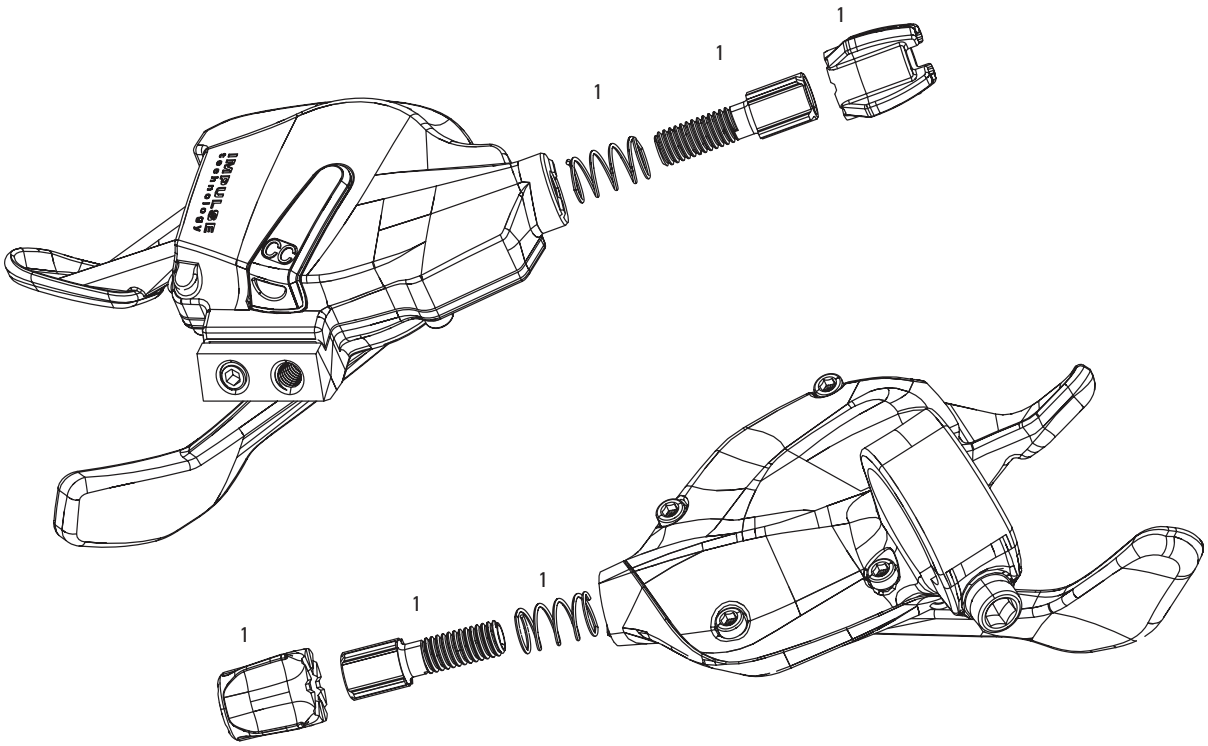

No.	Part Number	Description
1	11.7015.056.000	11 SL X9 10-11 X7 Barrel Adjuster Qty 2
ns	11.7015.033.000	07-09 X0/X9/X7 Trigger Clamp/Bolt Kit, Qty 1
ns	11.7015.033.070	Trigger Clamp/Bolt Kit Shiny Black Qty 1
ns	11.7015.072.000	12 X5 Trigger Barrel Adjuster Kit
ns	11.7018.009.000	Via GT Trigger Clamp/Bolt Kit Falcon Grey Qty 1

SRAM X9 - TRIGGER SHIFTER 3x9 (2007-2012)

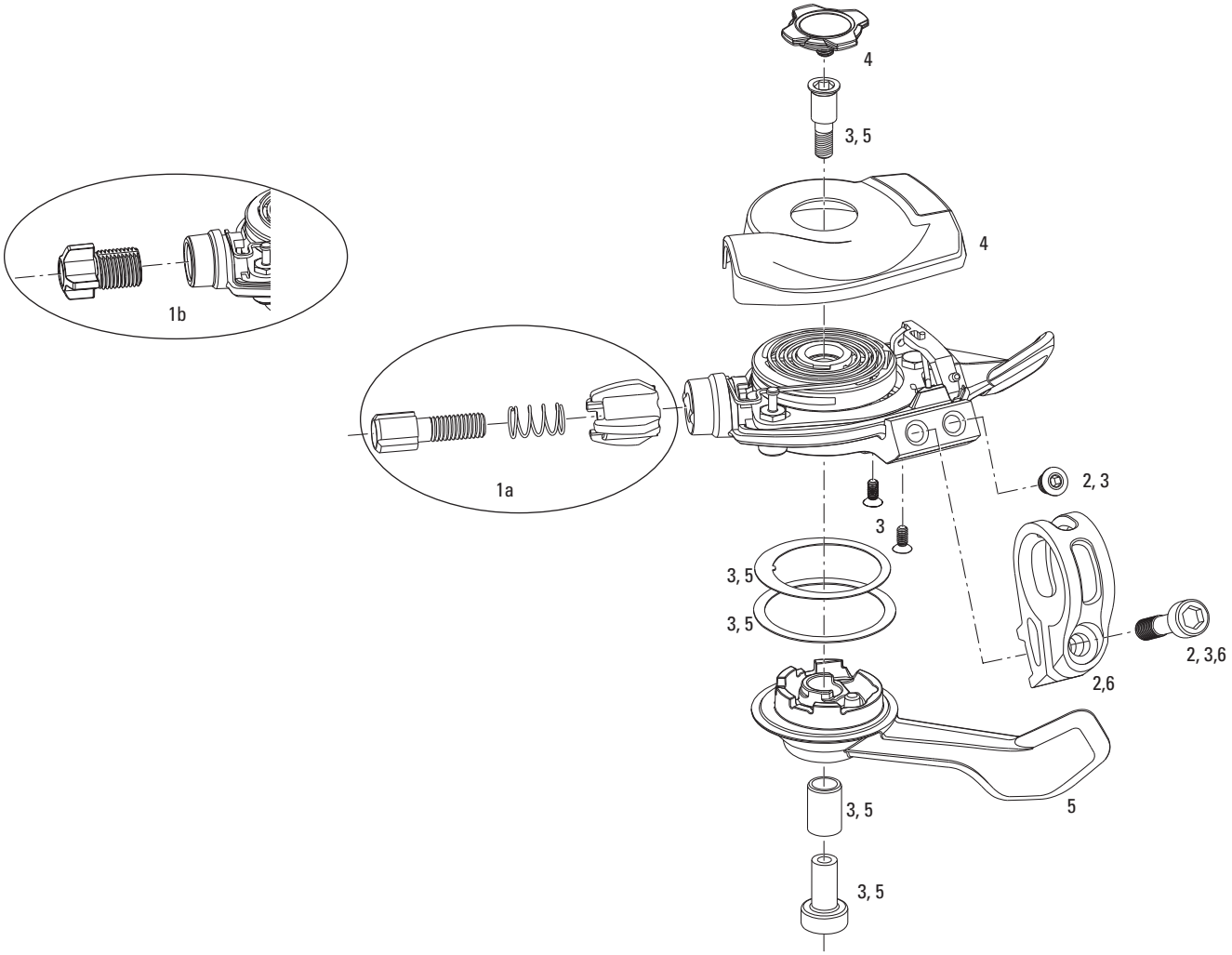

No.	Part Number	Description
1a	11.7015.024.000	07-09 X0/X9 Trigger Barrel Adjuster Qty 2 (M6, 3PC)
1b	11.7015.025.000	06-07 X0 / 07 X9 Trigger Barrel Adj Qty 2 (M10, 2PC)
2	11.7015.033.000	07-09 X0/X9/X7 Trigger Clamp/Bolt Kit, Qty 1
3	11.7015.031.000	07-09 X9 Trigger Bolt/Screw/Svc Kit Qty 1 New (< Nov 06)
4	11.7015.027.000	07-09 X9 Trigger Cover/Cap, Left New (< Nov 06)
4	11.7015.028.000	07-09 X9 Trigger Cover/Cap, Right New (< Nov 06)
5	11.7015.029.000	07-09 X9 Pull Lever Assy, Left New (< Nov 06)
5	11.7015.030.000	07-09 X9 Pull Lever Assy, Right New (< Nov 06)
6	11.7015.033.070	Trigger Clamp/Bolt Kit Shiny Black Qty 1

SRAM X7 - TRIGGER SHIFTER 3x9 (2010)

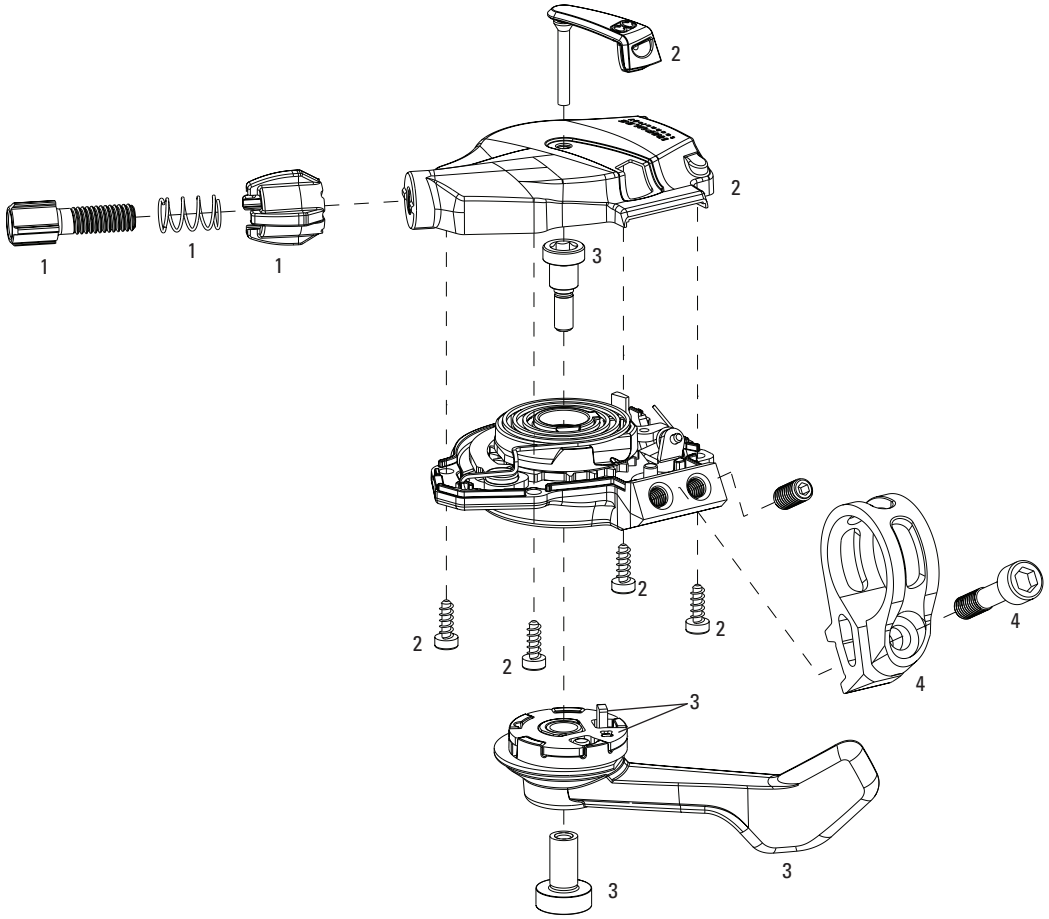

No.	Part Number	Description
1	11.7015.056.000	11 SL X9 10-11 X7 Barrel Adjuster Qty 2
2	11.7015.057.000	2010 X7 Trigger Cover Kit Left Black
2	11.7015.057.020	2010 X7 Trigger Cover Kit Right Black
3	11.7015.058.000	2010 X7 Trigger Pull Lever Kit Left
3	11.7015.058.010	2010 X7 Trigger Pull Lever Kit Right
4	11.7015.033.000	07-09 X0/X9/X7 Trigger Clamp/Bolt Kit, Qty 1

SRAM X7 (2007-2009) / SRAM X9 (2006) - TRIGGER SHIFTER 3x9
SRAM X5, X-GEN (2008-2010) / SRAM X9 (05) / SRAM X7 (05-06)
ROCKET, ATTACK (05-09) / DUALDRIVE (06-08) / SX5 (07) - TRIGGER SHIFTER 3x9

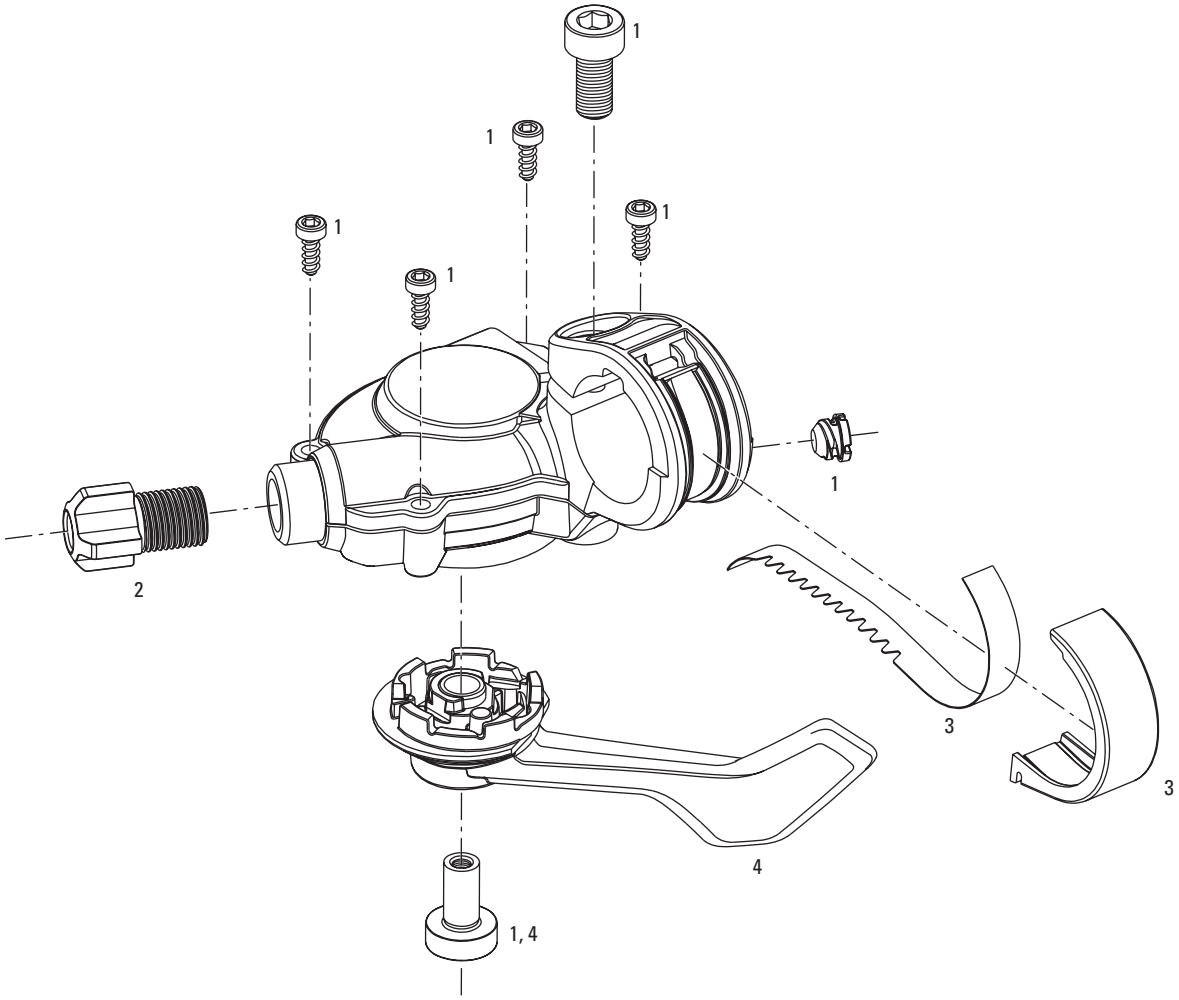

No.	Part Number	Description
1	00.0000.200.931	Trigger Bolt Kit Qty 1 - 06 X9 / 07-09 X7 / Rocket /Attack /07 SX5 / 08-09 X5 - XGen / Dualdrive
2	11.7015.025.000	06-07 X0 / 07 X9 Trigger Barrel Adj Qty 2 (M10, 2PC)
3	00.0000.200.933	Gear Indicator/Lens 9Spd Left/Right - 06 X9 / 07-09 X7 / Rocket /Attack / SX5 / X5 / XGen
4	00.0000.200.935	Pull Lever Assy, Left - 06 X9 / 07-09 X7 / Rocket
4	00.0000.200.938	Pull Lever Assy, Right - 06 X9 / 07-09 X7 / Rocket

SRAM X4 / SX4 / TRX - TRIGGER SHIFTER (2006-2011) 3x9

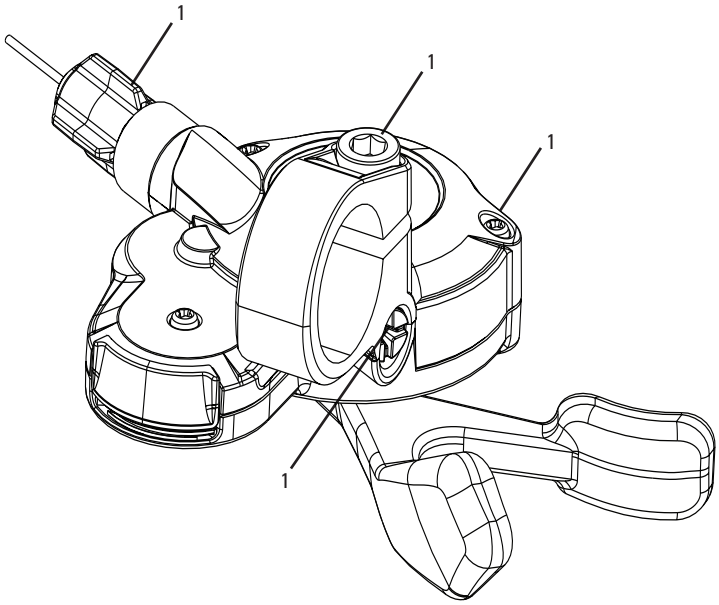

No.	Part Number	Description
1	11.7015.051.000	X.4 Trigger Spare Parts Kit, Qty 1
ns	11.7015.063.000	X4 X3 VIA Gear Indicator Lens w X4 X3 Via Backgrounds Left
ns	11.7015.063.010	X4 X3 VIA Gear Indicator Lens w X4 X3 Via Backgrounds Right

SRAM XX1 / XX / X01 / X0 GRIP SHIFT

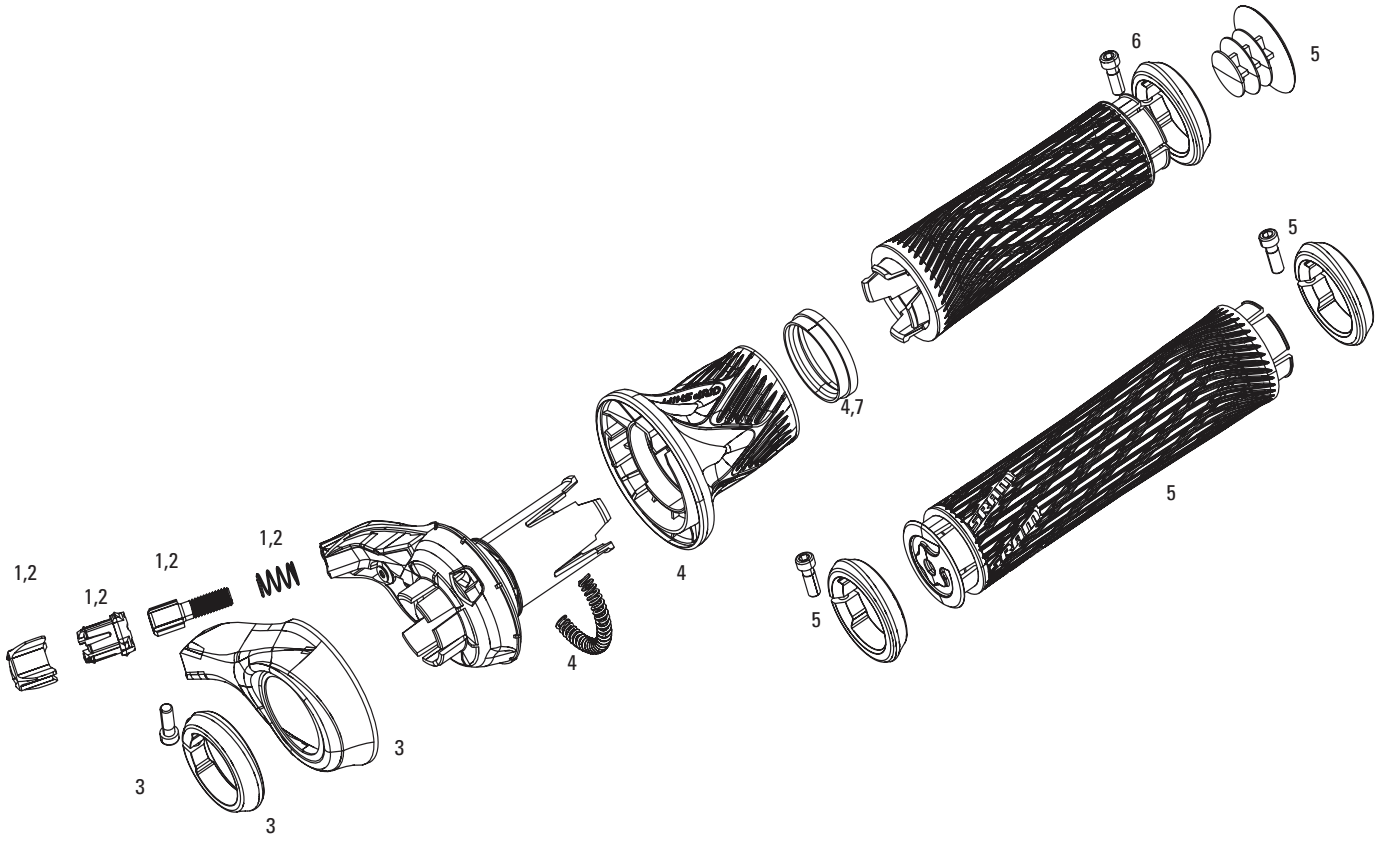

No.	Part Number	Description
1	11.7018.006.000	XX/X01/X0 Silver Grip Shift/Trigger Barrel Adjuster Kit Qty 1
2	11.7018.006.001	XX1/X0 Grip Shift Barrel Adjuster Kit Black Qty 1
3	11.7018.015.000	XX1 Grip Shift Cover/Clamp Kit, Right Qty 1
3	11.7018.034.000	X01 Grip Shift Cover/Clamp Kit Black, Right Qty 1
3	11.7018.034.001	X01 Grip Shift Cover/Clamp Kit Red, Right Qty 1
3	11.7018.007.000	XX Grip Shift Cover/Clamp Kit, Right Qty 1
3	11.7018.007.001	XX Grip Shift Cover/Clamp Kit, Left Qty 1
3	11.7018.008.000	X0 Grip Shift Silver Cover/Clamp Kit, Right Qty 1
3	11.7018.008.001	X0 Grip Shift Silver Cover/Clamp Kit, Left Qty 1
3	11.7018.008.002	X0 Grip Shift Red Cover/Clamp Kit, Right Qty 1
3	11.7018.008.003	X0 Grip Shift Red Cover/Clamp Kit, Left Qty 1
4	11.7018.010.000	XX/X0 Shift Grip F W Spring & Lockrings
4	11.7018.010.001	XX1/XX/X0/X01 Shift Grip Rear W Spring & Lockrings
5	00.7918.013.000	Locking Grips for Grip Shift Integrated 100mm with Silver Clamp and End Plug
5	00.7918.013.001	Locking Grips for Grip Shift Integrated 100mm with Black Clamp and End Plug
5	00.7918.013.002	Locking Grips for Grip Shift Full Length 122mm with Silver Clamps and End Plug
5	00.7918.013.003	Locking Grips for Grip Shift Full Length 122mm with Black Clamps and End Plug
5	00.7918.013.004	Locking Grips for XX1 Grip Shift 100mm and 122mm with Silver Clamps and End Plug
6	00.7918.013.005	Locking Grips for XX1 Grip Shift 100mm and 122mm with Black Clamps and End Plug
7	11.7018.017.000	XX1/XX/X0/X01 Grip Shift Discrete Lockrings to use with Non Lock On Grips Qty 2
7	11.7018.016.000	XX1/X01 Lock-On Grip Clamp and Bolt Black
7	11.7018.017.001	XX1/XX/X0/X01 Grip Shift Lockrings to use with Lock-On Grips Qty2

SRAM X0 / SRAM X9 / SRAM X7 / ROCKET / ATTACK - TWIST SHIFTER (2005-2011) 3x9

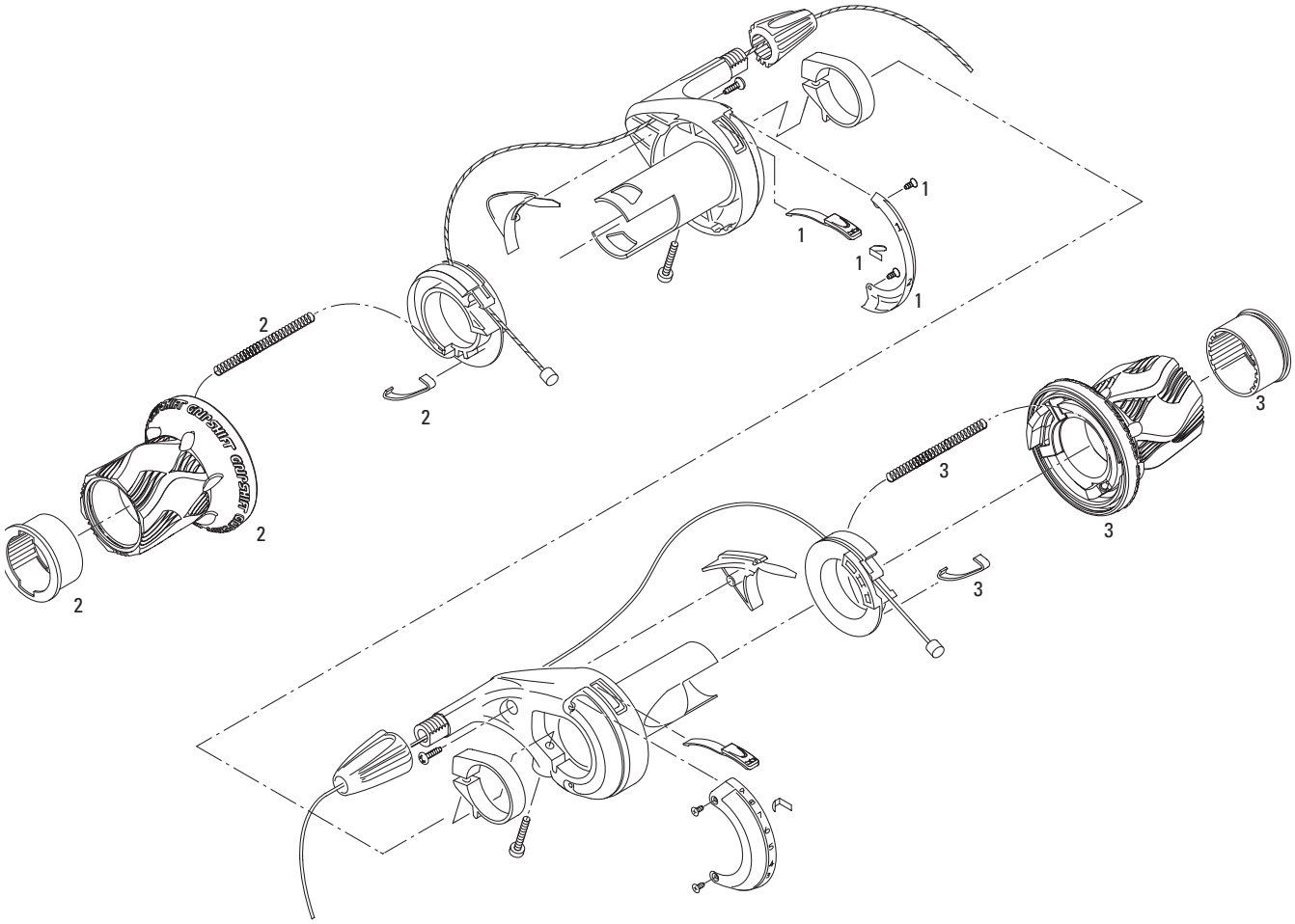

No.	Part Number	Description
1	00.0000.200.528	Rocket Gear Indicator Kit, Right, 9Spd
1	00.0000.200.561	X0 / X9 / X7 / Rocket Gear Indicator Kit, Left
2	00.0000.200.598	X0 Grip Assy, Left, Micro Adjust
2	00.0000.200.599	X0 Grip Assy, Left, Index
2	00.0000.200.562	X9 / Rocket Grip Assy, Left, Micro Adjust
2	00.0000.200.569	X9 / Rocket Grip Assy, Left, Index
2	00.0000.200.596	X7 / Attack Grip Assy, Left, Micro Adjust
2	00.0000.200.597	X7 / Attack Grip Assy, Left, Index
3	00.0000.200.610	X0 Grip Assy, Right, 8/9Spd
3	00.0000.200.606	X9 Grip Assy, Right, 8/9Spd
3	00.0000.200.608	X7 Grip Assy, Right, 8/9Spd
3	00.0000.200.609	Attack Grip Assy, Right

5.0 / CENTERA - TWIST SHIFTER 3x9

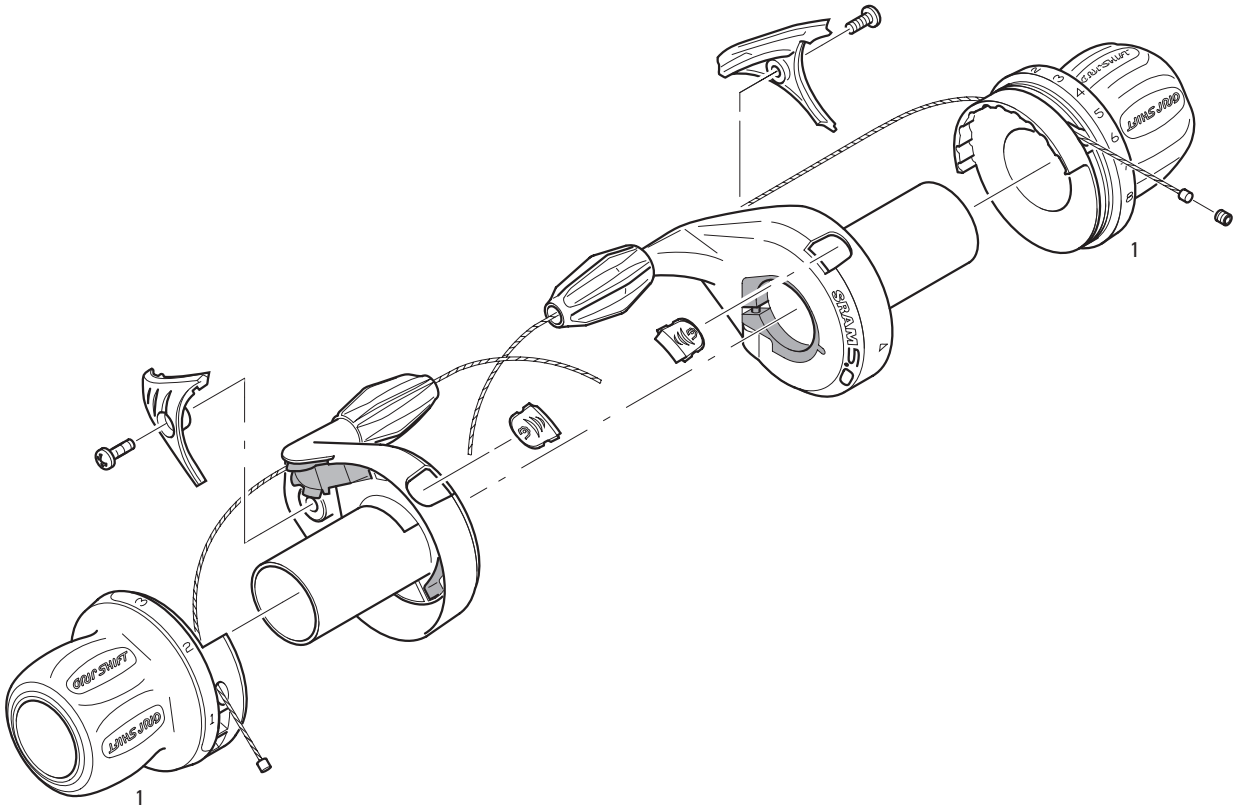

No.	Part Number	Description
1	00.0000.200.350	5.0/Centura Shorty Grips, Pair

3.0 COMP / 3.0 / MRX COMP / MRX - TWIST SHIFTER 3x9

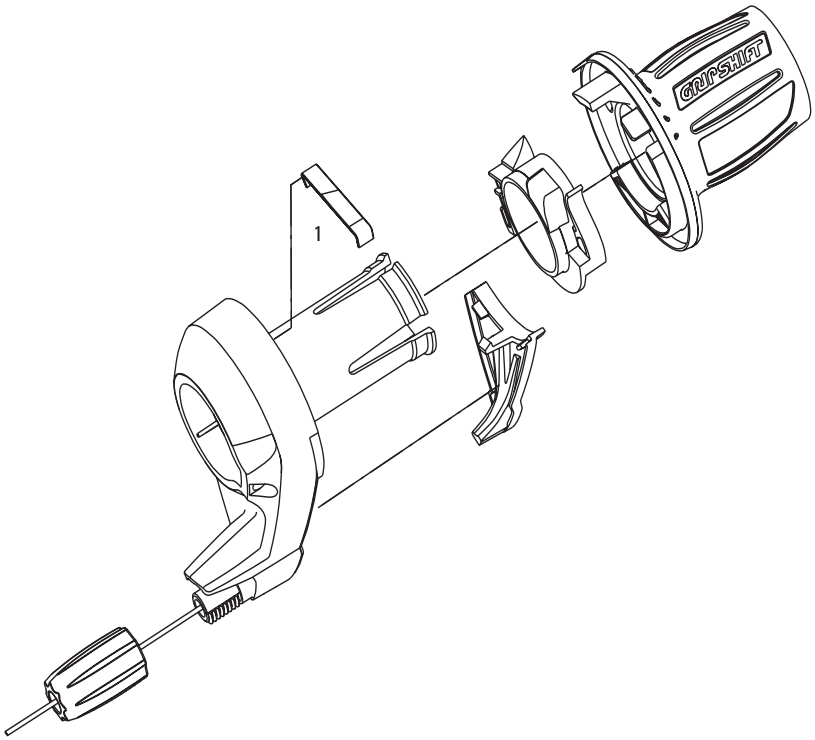

No.	Part Number	Description
1	11.7015.067.000	Indexing Spring 3.0 / MRX 10pcs

Part Number	Description
11.6118.005.000	XX1 Left Crank Arm GXP Q156 170
11.6118.005.001	XX1 Left Crank Arm GXP Q156 175
11.6118.005.002	XX1 Left Crank Arm GXP Q168 170
11.6118.005.003	XX1 Left Crank Arm GXP Q168 175
11.6918.001.000	XX1 Chain Ring Bolt Kit 4-arm Aluminum Zephyr Grey
11.6118.029.003	X01 Left Crank Arm GXP 175 Black
11.6118.029.002	X01 Left Crank Arm GXP 175 Red
11.6118.029.001	X01 Left Crank Arm GXP 170 Black
11.6118.029.000	X01 Left Crank Arm GXP 170 Red
11.6118.030.000	Left Arm X01DH GXP 165 Red
11.6118.030.001	Left Arm X01DH GXP 165 Black
11.6118.004.001	XX1 Spider with Chain Ring Bolts GXP 76BCD 11Speed Arctic Grey
11.6118.004.002	XX1 Spider with Chain Ring Bolts BB30 76BCD 11Speed Arctic Grey
11.6218.014.000	Spider X01 GXP for Guard 11speed 94bcd Nano Black
11.6218.014.001	Spider X01 GXP No Outer Position 11speed 94bcd Nano Black
11.6218.014.002	Spider X01 BB30 for Guard 11speed 94bcd Nano Black
11.6218.014.003	Spider X01 BB30 No Outer Position 11speed 94bcd Nano Black
11.6918.003.000	X01 Chainring Bolt Kit 4-arm Aluminum Black
11.6115.529.100	XX Left Crank Arm GXP Q156 170
11.6115.529.110	XX Left Crank Arm GXP Q156 175
11.6115.529.140	XX Left Crank Arm GXP Q166 170
11.6115.529.150	XX Left Crank Arm GXP Q166 175
11.6215.188.120	XX Chain Ring 25T S1 80 AL3 Tungsten Grey 10 speed
11.6215.188.130	XX Chain Ring 28T S1 80 AL3 Tungsten Grey 10 speed
11.6215.188.140	XX Chain Ring 39T S1 120 AL6 Tungsten Grey L-Pin GXP 10 speed
11.6215.188.150	XX Chain Ring 39T S1 120 AL6 Tungsten Grey S-Pin BB30 10 speed
11.6215.188.160	XX Chain Ring 39T S1 120 AL6 Tungsten Grey C-Pin Cannondale 10 speed
11.6215.188.170	XX Chain Ring 42T S1 120 AL6 Tungsten Grey L-Pin GXP 10 speed
11.6215.188.180	XX Chain Ring 42T S1 120 AL6 Tungsten Grey S-Pin BB30 10 speed
11.6215.188.190	XX Chain Ring 42T S1 120 AL6 Tungsten Grey C-Pin Cannondale 10 speed
11.6215.193.060	XX Chain Ring Bolt Kit 4x2
11.6415.001.000	Bottom Bracket Bearing Adjuster BB30 Press Fit 30
11.6900.002.160	Crank Arm Bolt M15/M25 Alloy Self-Extracting GXP Black Qty 1
11.6115.530.060	Crank Arm Bolt M18/M30 Alloy Self-Extracting BB30 Right Qty 1
11.2415.026.000	XX, PG1099, PG1080, PG999, PG990, PG970 OG1090, OG1070 Cassette Lockring 11T Aluminum
11.6415.004.000	GXP Drive Side Reducer Shield Qty 10
11.6118.026.000	Removeable Spider Torx25 Mounting Bolts Qty3

NOTE: XX crank is compatible with XX 10 speed cassette, XX front derailleur and XX rear derailleur only.
XX1 crank is compatible with XG-1199 11 speed cassette, XX1 shfiters and XX1 rear derailleur only.

TRUVATIV X0 CHAIN GUIDES - 2012

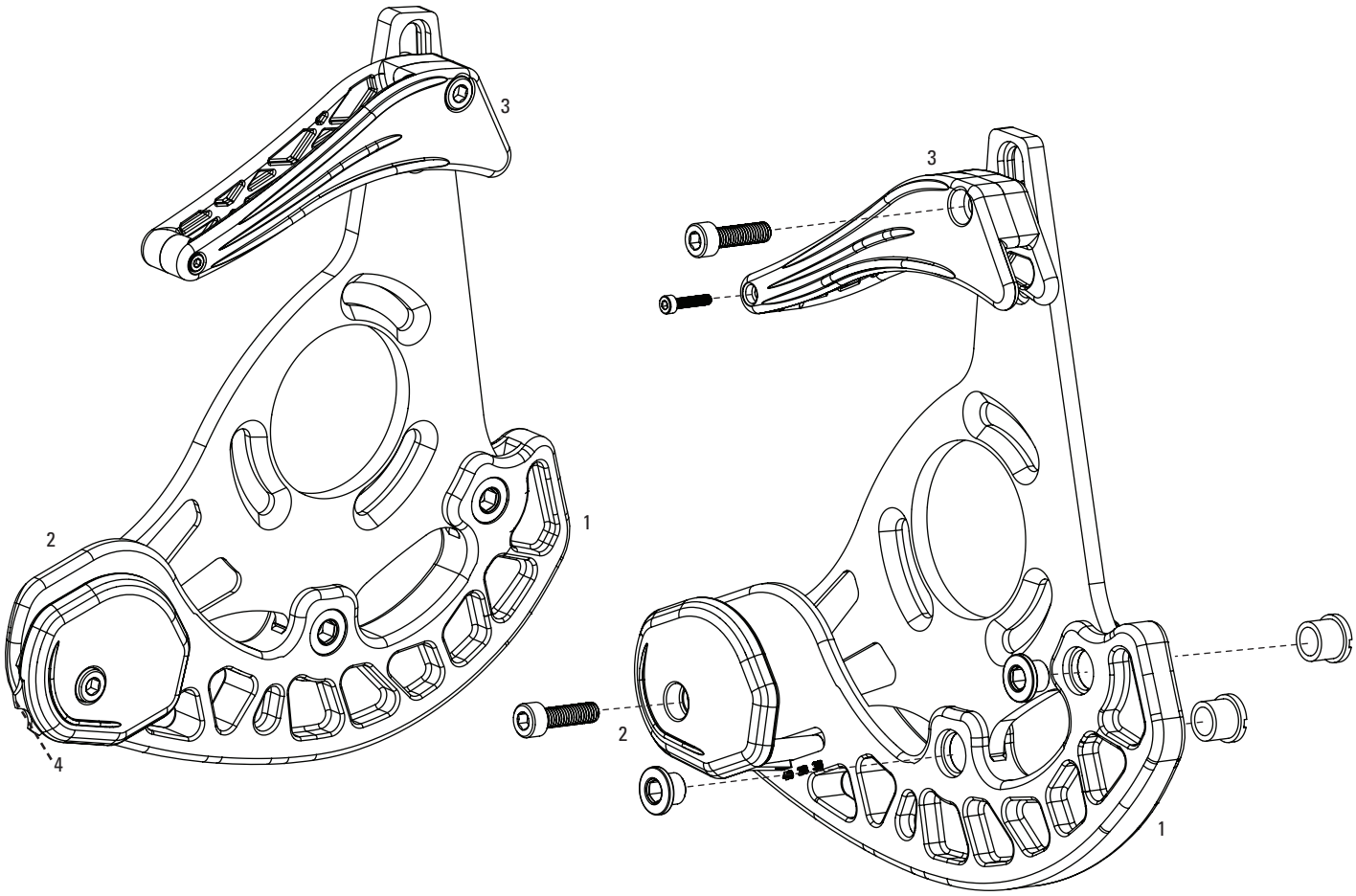

NOTE
1. All kits include hardware

No.	Part Number	Description
1	11.6315.032.000	Truvativ X0 Chain Guide 36-40T Black Skid Plate Kit
1	11.6315.032.020	Truvativ X0 Chain Guide 32-36T Black Skid Plate Kit
1	11.6315.032.030	Truvativ X0 Chain Guide 32-36T White Skid Plate Kit
2	11.6315.033.000	Truvativ X0 Chain Guide Black Lower Guide Kit
2	11.6315.033.010	Truvativ X0 Chain Guide White Lower Guide Kit
3	11.6315.033.020	Truvativ X0 Chain Guide Black Upper Guide Kit
4	11.6315.034.000	Truvativ X0 Chain Guide Pulley Kit

TRUVATIV 2X10 X-GUIDE CHAIN GUIDES - 2012

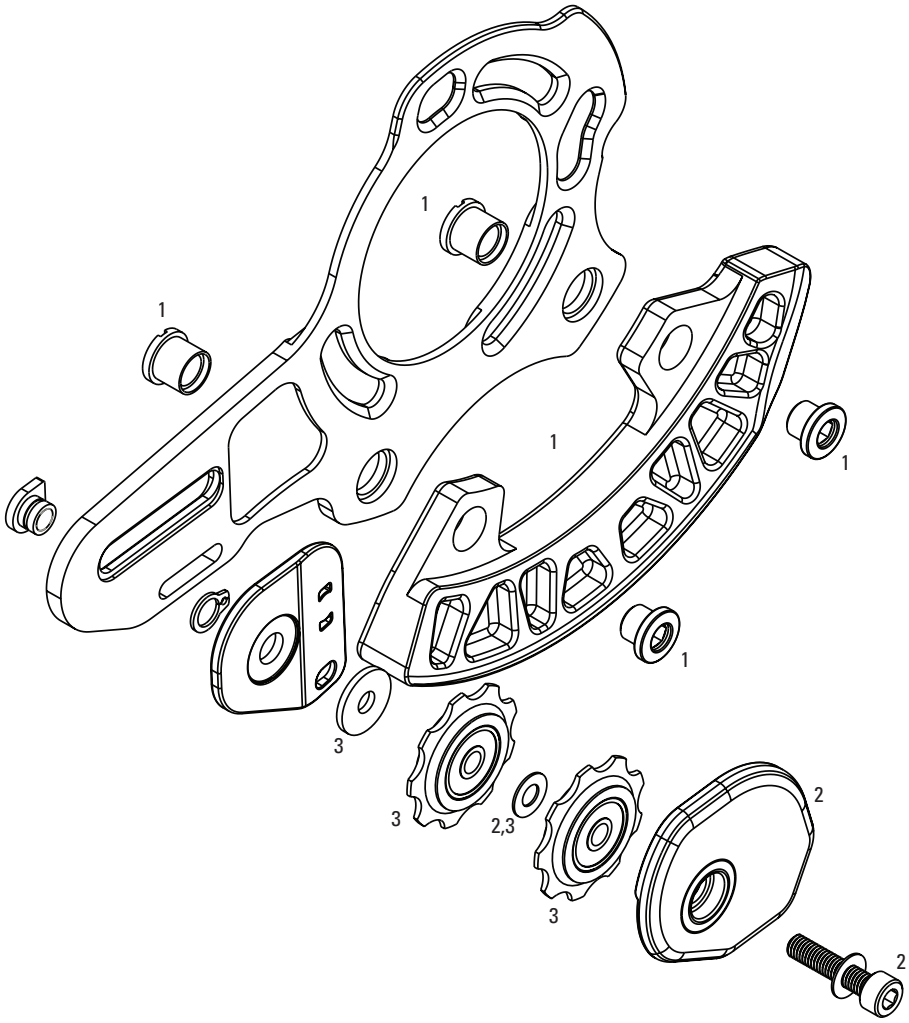

NOTE
1. All kits include hardware

No.	Part Number	Description
1	11.6318.000.000	Truvativ 2x10 X-Guide Black Skid Plate Kit
1	11.6318.000.001	Truvativ 2x10 X-Guide White Skid Plate Kit
2	11.6318.001.000	Truvativ 2x10 X-Guide Black Lower X-Guide Kit
2	11.6318.001.001	Truvativ 2x10 X-Guide White Lower X-Guide Kit
3	11.6318.002.000	Truvativ 2x10 X-Guide Pulley Kit

X0 / X9 / X7 SRAM - CRANK / CRANK CHAIN RINGS / CASSETTE / BOTTOM BRACKET

Part Number	Description
11.6115.543.080	Left Arm X0 GXP 170 Silver
11.6115.543.010	Left Arm X0 GXP 170 Red
11.6115.543.000	Left Arm X0 GXP 170 Black
11.6115.543.090	Left Arm X0 GXP 175 Silver
11.6115.543.050	Left Arm X0 GXP 175 Red
11.6218.008.000	Spider X0 GXP 10speed 120/80 Mirror Black
11.6218.008.001	Spider X0 BB30 10speed 120/80 Mirror Black
11.6115.550.000	Left Arm X0DH GXP 165 Red
11.6115.550.010	Left Arm X0DH GXP 170 Red
11.6115.550.020	Left Arm X0DH GXP 175 Red
11.6115.551.000	Spider X0DH 104/64 bcd Single Speed GXP Mirror Black
11.6115.551.010	Spider X0DH 104/64 bcd Single Speed BB30 Mirror Black
11.6115.544.000	Left Arm X9 GXP 170 Grey
11.6115.544.030	Left Arm X9 GXP 175 Grey
11.6115.544.060	Left Arm X9 GXP 180 Grey
11.6218.008.002	Spider X9 GXP 10speed 120/80 Blast Black
11.6218.008.003	Spider X9 BB30 10speed 120/80 Blast Black
11.6115.545.000	Left Arm X7 GXP 170 Storm Grey
11.6115.545.010	Left Arm X7 GXP 175 Storm Grey
11.6115.548.000	Left Arm X5 GXP 170 Black
11.6115.548.010	Left Arm X5 GXP 175 Black
11.6215.188.310	Chain Ring MTB 25T S1 80 AL3 Blast Black 2x10
11.6215.188.300	Chain Ring MTB 28T S1 80 AL3 Blast Black 2x10
11.6215.188.250	Chain Ring MTB 39T S2 120 AL6 White L-Pin GXP 2x10
11.6215.188.250	Chain Ring MTB 39T S2 120 AL6 Blast Black L-Pin GXP CNC 2x10
11.6215.188.270	Chain Ring MTB 39T S2 120 AL6 Blast Black S-Pin BB30 CNC 2x10
11.6215.188.220	Chain Ring MTB 42T S2 120 AL6 White L-Pin GXP 2x10
11.6215.188.230	Chain Ring MTB 42T S2 120 AL6 Blast Black S-Pin BB30 CNC 2x10
11.6215.188.240	Chain Ring MTB 42T S2 120 AL6 Blast Black L-Pin GXP CNC 2x10
11.6215.188.280	Chain Ring MTB 33T S1 104 AL5 Tungsten Grey 3x10
11.6215.188.290	Chain Ring MTB 33T S1 104 AL5 Blast Black 3x10
11.6215.188.200	Chain Ring MTB 44T S1 104 AL5 Blast Black L-Pin GXP CNC 3x10
11.6215.188.210	Chain Ring MTB 44T S1 104 AL5 Blast Black S-Pin BB30 CNC 3x10
11.6215.188.320	Chain Ring MTB 36T S1 104 AL3 Blast Black 2x10 (Specialized 36/24)
11.6215.188.370	Chainring MTB 22T S1 64 AL3 Blast Black 10 Speed
11.6215.193.070	Chainring Bolt Kit 4x2 Steel/Steel Black
11.6215.193.080	Chainring Bolt Kit 4x2 Aluminum/Steel Black
11.6900.002.160	Crank Arm Bolt M15/M25 Alloy Self-Extracting GXP Black Qty 1
11.6115.530.060	Crank Arm Bolt M18/M30 Alloy Self-Extracting BB30 Right Qty 1
11.6215.188.380	Chain Ring MTB 34T 104bcd AL4 Blast Black 1x10
11.6215.188.390	Chain Ring MTB 36T 104bcd AL4 Blast Black 1x10
11.6215.188.400	Chain Ring MTB 38T 104bcd AL4 Blast Black 1x10
11.6215.188.410	Chain Ring MTB 36T S1 104bcd 49 chainline AL5 Blast Black 2x10 No Pin (36/22)
11.6215.188.420	Chain Ring MTB 38T S1 104bcd 49 chainline AL5 Blast Black 2x10 No Pin (38/24)
11.6215.188.430	Chain Ring MTB 36T S1 104bcd 49 chainline AL5 Blast Black 2x10 Long Pin (36/22)
11.6215.188.440	Chain Ring MTB 38T S1 104bcd 49 chainline AL5 Blast Black 2x10 Long Pin (38/24)
11.6215.188.460	Chain Ring MTB 32T S1 64 Alum 3mm Falcon Grey (48-32)
11.6215.188.450	Chain Ring MTB 48T S1 104 AL5 Falcon Grey L-Pin 2x10 (48-32)
11.6218.007.007	Chain Ring MTB 38T S1 104 49 Alum 5mm Tungsten Grey CNC-After L-Pin 2x10 Specialized (38-24)
11.6118.025.000	Removeable Spider Torx25 Mounting Bolts Qty3
11.2415.022.000	Cassette Lockring Aluminum PG990, PG970 DH for 11T Red
11.2415.013.000	Cassette Lockring Aluminum OG1070, PG970 For 12T
11.2415.027.000	Cassette PG1050, PG1030, PG950 Lockring 11T Steel
11.2415.027.010	Cassette PG1050, PG950 Lockring 12T Steel
11.2415.025.000	XX, PG1099, PG1080, PG999, PG990, PG970 OG1090, OG1070 Cassette Lockring 11T Aluminum
00.0000.201.007	Cassette Spacer PG990, 970DH, Qty 1
11.6415.001.000	Bottom Bracket Bearing Adjuster BB30 Press Fit 30
11.6415.004.000	GXP Drive Side Reducer Shield Qty 10
11.6115.552.000	Wave Washer for GXP to PressFit Adapter 24.5mm QTY 5
11.6415.007.010	Bottom Bracket Shield and Wave Washer Assembly PressFit GXP MTB
11.6415.007.030	Bottom Bracket Shield and Wave Washer Assembly PressFit 30 Bearing
11.6415.007.040	Bottom Bracket Shield and Wave Washer Assembly Pressfit GXP Specialized 84.5
11.6115.533.000	Spindle Spacer, BB30 - DS 13
11.6115.533.010	Spindle Spacer, BB30 - Drive Side 9.11
11.6115.533.020	Spindle Spacer, BB30 - Drive Side 15.46
11.6415.005.000	BB30 Spacer Kit 2 X 2.5mm

GUIDE RSC - HYDRAULIC DISC BRAKE - LEVERS

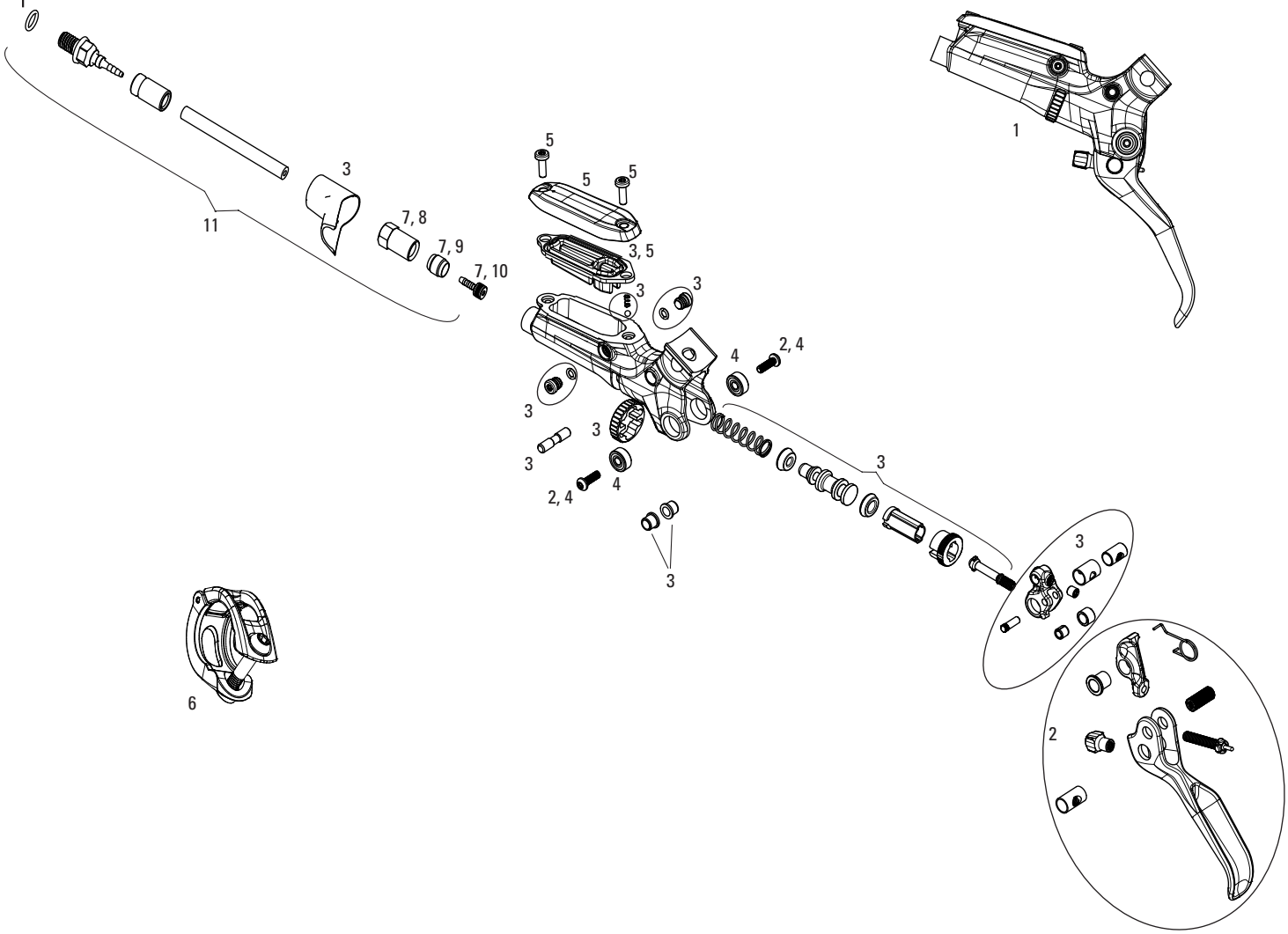

Notes:

1. Lever Internals kit is pre-assembled

No.	Part Number	Description
1	11.5018.004.028	Lever Assembly, Aluminum lever, Hinged Clamp/MMX compatible, Black Ano (assembled, no hose) - Guide RSC
1	11.5018.004.029	Lever Assembly, Aluminum lever, Hinged Clamp/MMX compatible, Silver Ano (assembled, no hose) - Guide RSC
2	11.5018.003.010	Lever Blade Aluminum Black - (includes cam guide) Guide RSC Qty 1
3	11.5018.005.005	Lever Internals Guide RSC Qty 1
4	11.5018.023.000	Lever Bearing Kit (includes two 1/8x3/8x5/32 bearings and hardware) - Guide RSC/X0 Trail
5	11.5018.022.000	Reservoir Cap Kit (includes reservoir cap, bladder and hardware) - Guide R/RS/RSC/DB5
6	11.5315.048.050	MMX Clamp, Silver, Lever (Stainless Steel Bolt T25) - Guide DB5 Elixir 9/7/CR Mag/X0/ XX, Qty 1
6	11.5315.048.060	MMX Clamp, Silver, Lever (Ti Bolt T25) - Guide DB5 Elixir 9/7/CR Mag/X0/ XX, Qty 1
6	11.5315.048.070	MMX Clamp, Black, Lever (Stainless Steel Bolt T25) - Guide DB5 Elixir 9/7/CR Mag/X0/ XX, Qty 1
6	11.5315.048.080	MMX Clamp, Black, Lever (Ti Bolt T25) - Guide DB5 Elixir 9/7/CR Mag/X0/ XX, Qty 1
7	11.5309.765.000	Hydraulic Disc Brake Hose Fitting Kit, Qty 1 (threaded hose barb, comp fitting, comp nut)
8	11.5309.766.000	Hydraulic Disc Brake Compression Hose Nut, Qty 5
9	11.5311.555.000	Hydraulic Disc Brake Compression Hose Fitting, Qty 10
10	11.5311.556.000	Hydraulic Disc Brake Hose Barb, Threaded, Qty 10
11	00.5016.168.130	Hydraulic Line Kit - GUIDE R/RS/RSC, DB5, 2000mm, Stainless, Black, Qty 1
11	00.5016.168.140	Hydraulic Line Kit - GUIDE R/RS/RSC, DB5, 2000mm, 2000mm, Stainless, White, Qty 1

GUIDE RSC - HYDRAULIC DISC BRAKE - CALIPERS

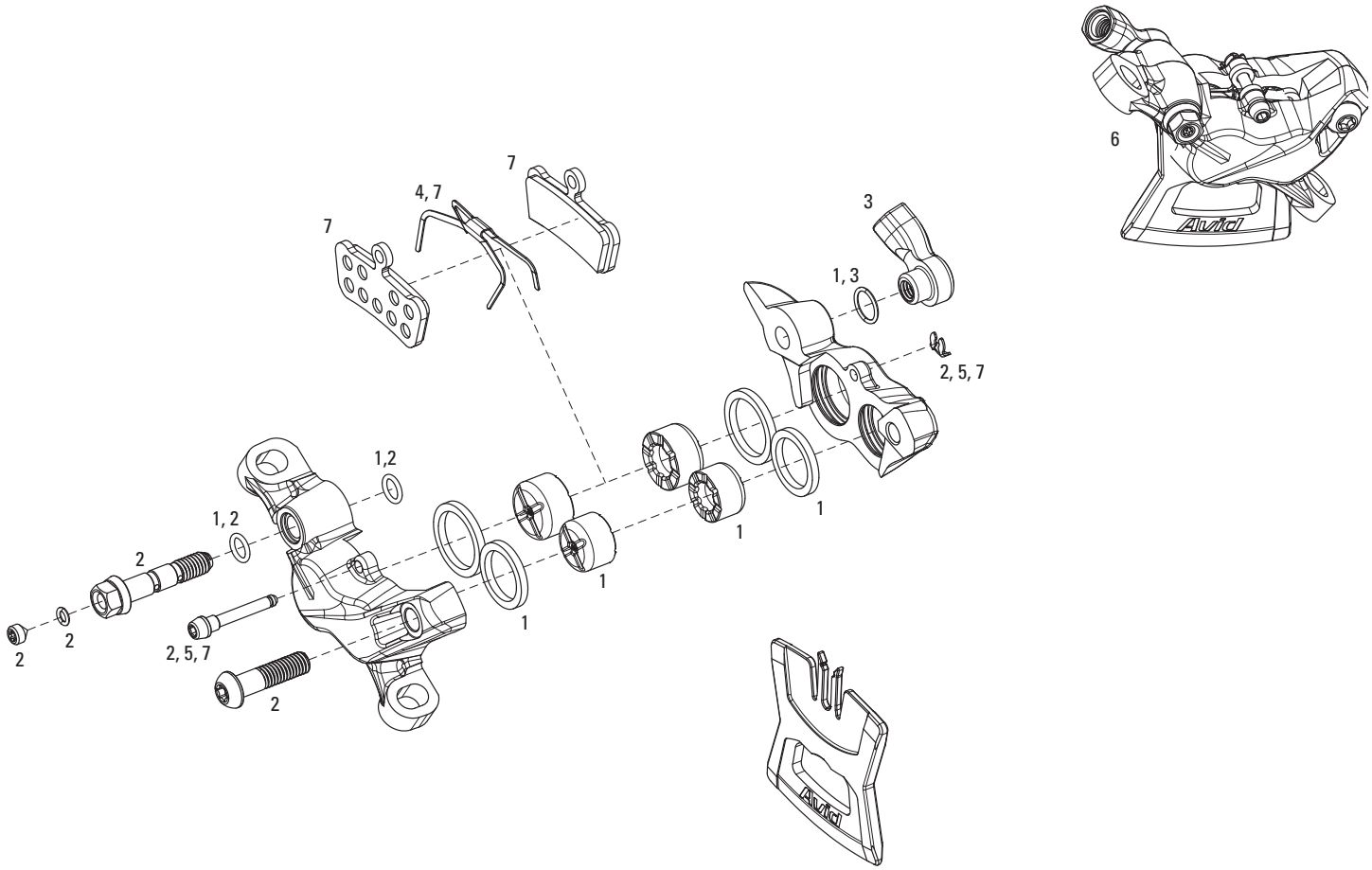

NOTES:
1. See lever pages for exploded view of Hydraulic Line kits

No.	Part Number	Description
1	11.5018.020.001	Caliper Piston Kit (includes 2-16mm & 2-14mm caliper pistons, seals & orings) - Guide R,RS,RSC
2	11.5018.021.002	Caliper Hardware Kit (includes stainless body bolt, banjo bolt, bleed screw, pad pin) - GUIDE RSC
3	11.5015.060.020	Banjo Kit, Black, Qty 1 -Elixir R/CR/CR Mag/X0/Elixir 9/Elixir 7/Guide R,RS,RSC
4	11.5018.006.000	Pad Spreader, Qty 2- Trail/Guide R,RS,RSC
5	11.5015.036.010	Pad Pin Kit, Silver, Steel, Qty 2 - Elixir/Code/Guide R,RS,RSC
5	11.5015.036.020	Pad Pin Kit, Black, Aluminum, Qty 2 - Elixir/Code/Guide R,RS,RSC
6	11.5018.008.022	Caliper Assembly Standard (non-CPS) Black Anodized (assembled, no hose) - GUIDE RSC
6	11.5018.008.023	Caliper Assembly Standard (non-CPS) Silver Anodized (assembled, no hose) - GUIDE RSC
7	00.5318.003.003	Disc Brake Pads Organic/Alum, (1 set) - Trail/Guide
7	00.5318.003.004	Disc Brake Pads Organic/Steel, (1 set) - Trail/Guide
7	00.5318.003.005	Disc Brake Pads Sintered/Steel, (1 set) - Trail/Guide
ns	00.5016.168.130	Hydraulic Line Kit - GUIDE R/RS/RSC, DB5, 2000mm, Stainless, Black, Qty 1
ns	00.5016.168.140	Hydraulic Line Kit - GUIDE R/RS/RSC, DB5, 2000mm, 2000mm, Stainless, White, Qty 1
ns	11.5309.765.000	Hydraulic Disc Brake Hose Fitting Kit, Qty 1 (threaded hose barb, comp fitting, comp nut)
ns	11.5309.766.000	Hydraulic Disc Brake Compression Hose Nut, Qty 5
ns	11.5311.555.000	Hydraulic Disc Brake Compression Hose Fitting, Qty 10
ns	11.5311.556.000	Hydraulic Disc Brake Hose Barb, Threaded, Qty 10

GUIDE RS - HYDRAULIC DISC BRAKE - LEVERS

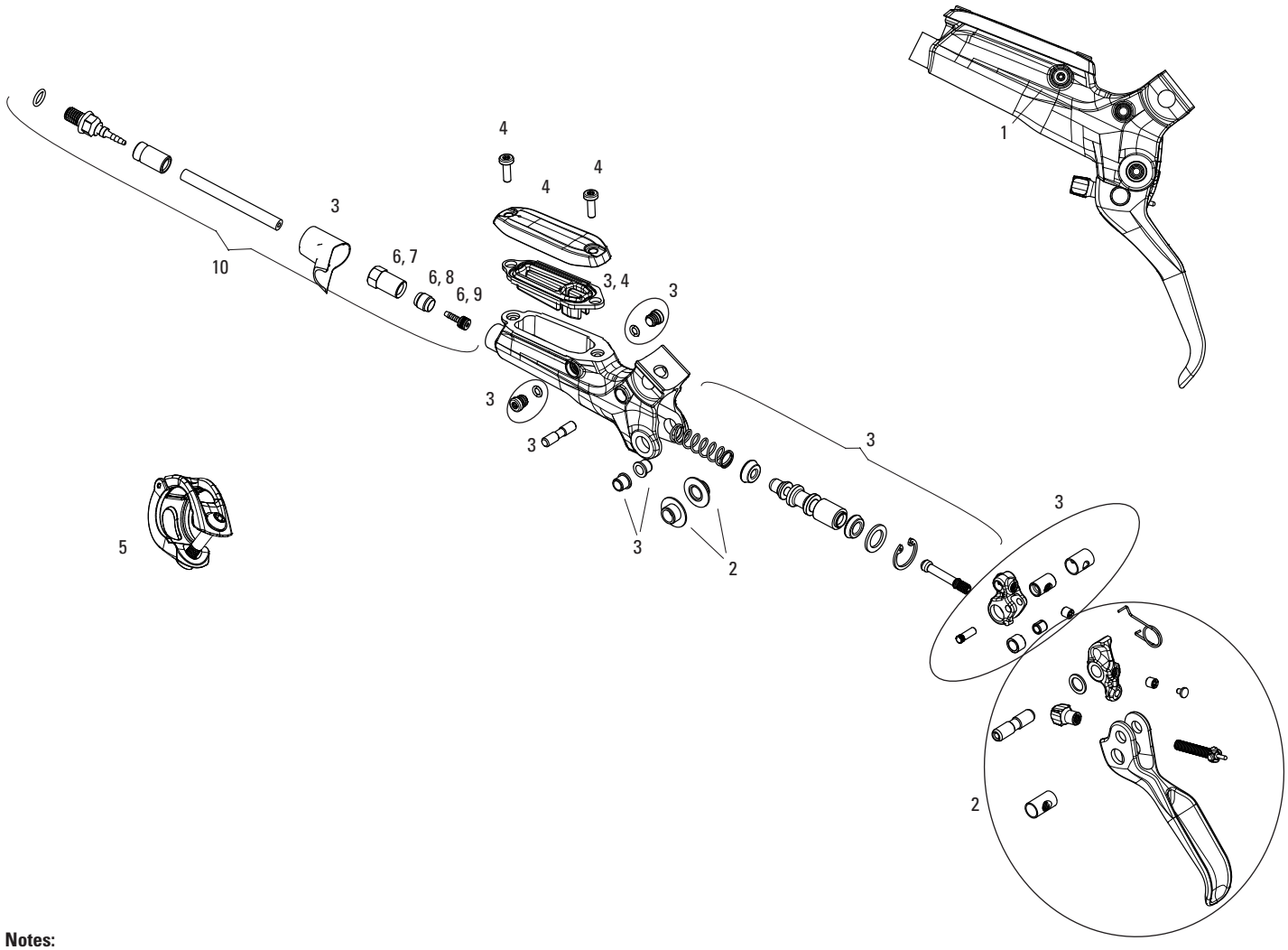

Notes:
1. Lever Internals kit is pre-assembled

No.	Part Number	Description
1	11.5018.004.026	Lever Assembly, Aluminum lever, Hinged Clamp/MMX compatible, Black (assembled, no hose) - Guide RS
1	11.5018.004.027	Lever Assembly, Aluminum lever, Hinged Clamp/MMX compatible, Grey (assembled, no hose) - Guide RS
2	11.5018.003.009	Lever Blade Aluminum Black - (includes cam guide) Guide RS Qty 1
3	11.5018.005.004	Lever Internals Guide RS Qty 1
4	11.5018.022.000	Reservoir Cap Kit (includes reservoir cap, bladder and hardware) - Guide R/RS/RSC/DB5
5	11.5315.048.050	MMX Clamp, Silver, Lever (Stainless Steel Bolt T25) - Guide DB5 Elixir 9/7/CR Mag/X0/ XX, Qty 1
5	11.5315.048.060	MMX Clamp, Silver, Lever (Ti Bolt T25) - Guide DB5 Elixir 9/7/CR Mag/X0/ XX, Qty 1
5	11.5315.048.070	MMX Clamp, Black, Lever (Stainless Steel Bolt T25) - Guide DB5 Elixir 9/7/CR Mag/X0/ XX, Qty 1
5	11.5315.048.080	MMX Clamp, Black, Lever (Ti Bolt T25) - Guide DB5 Elixir 9/7/CR Mag/X0/ XX, Qty 1
6	11.5309.765.000	Hydraulic Disc Brake Hose Fitting Kit, Qty 1 (threaded hose barb, comp fitting, comp nut)
7	11.5309.766.000	Hydraulic Disc Brake Compression Hose Nut, Qty 5
8	11.5311.555.000	Hydraulic Disc Brake Compression Hose Fitting, Qty 10
9	11.5311.556.000	Hydraulic Disc Brake Hose Barb, Threaded, Qty 10
10	00.5016.168.130	Hydraulic Line Kit - GUIDE R/RS/RSC, DB5, 2000mm, Stainless, Black, Qty 1
10	00.5016.168.140	Hydraulic Line Kit - GUIDE R/RS/RSC, DB5, 2000mm, 2000mm, Stainless, White, Qty 1

GUIDE R - HYDRAULIC DISC BRAKE - LEVERS

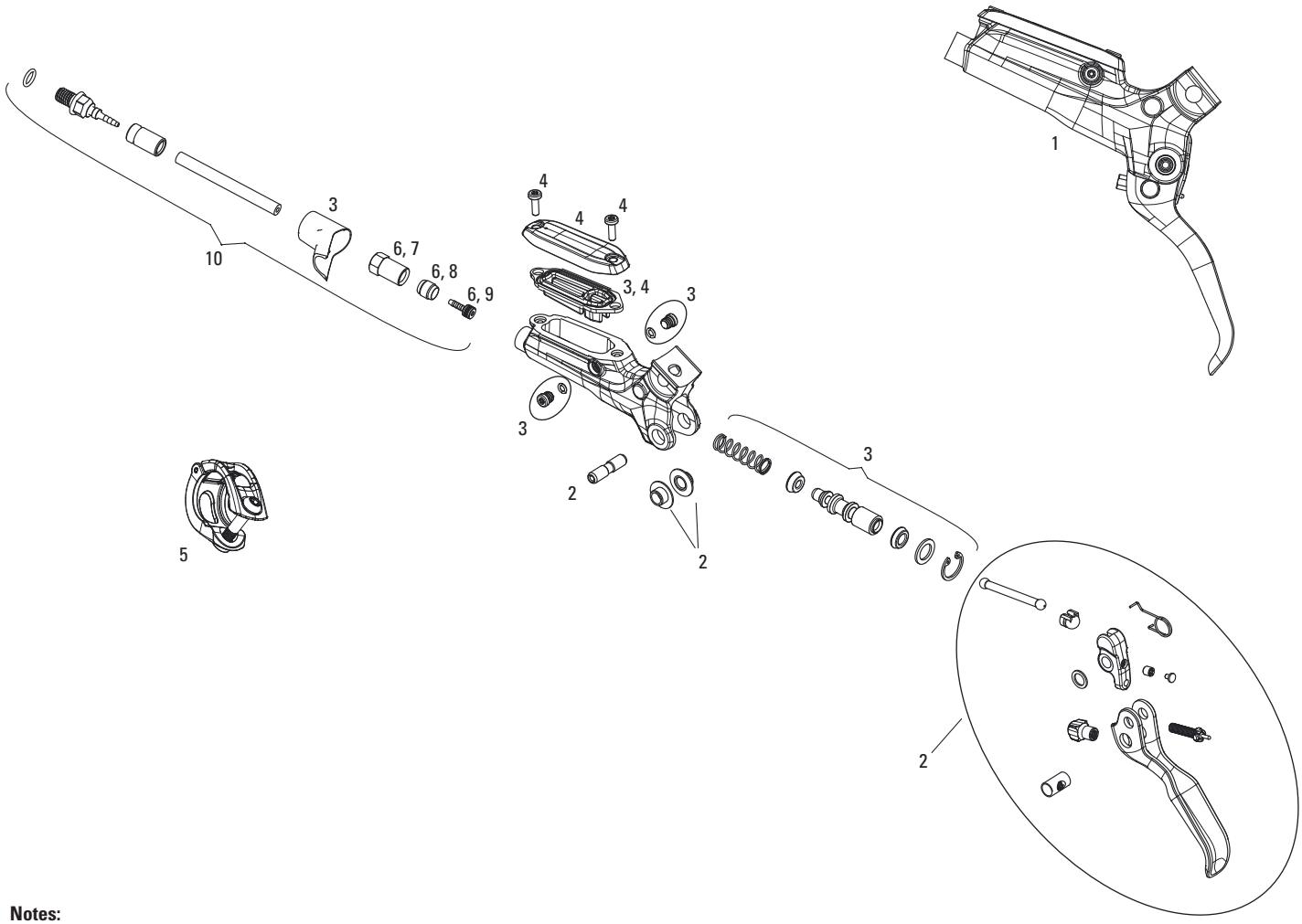

Notes:
1. Lever Internals kit is pre-assembled

No.	Part Number	Description
1	11.5018.004.024	Lever Assembly, Aluminum lever, Hinged Clamp/MMX compatible, Black (assembled, no hose) - Guide R
1	11.5018.004.025	Lever Assembly, Aluminum lever, Hinged Clamp/MMX compatible, Grey (assembled, no hose) - Guide R
2	11.5018.003.008	Lever Blade Aluminum Black (includes cam guide) - Guide R/DB5 Qty 1
3	11.5018.005.003	Lever Internals Guide R/DB5 Qty 1
4	11.5018.022.000	Reservoir Cap Kit (includes reservoir cap, bladder and hardware) - Guide R/RS/RSC/DB5
5	11.5315.048.050	MMX Clamp, Silver, Lever (Stainless Steel Bolt T25) - Guide DB5 Elixir 9/7/CR Mag/X0/ XX, Qty 1
5	11.5315.048.060	MMX Clamp, Silver, Lever (Ti Bolt T25) - Guide DB5 Elixir 9/7/CR Mag/X0/ XX, Qty 1
5	11.5315.048.070	MMX Clamp, Black, Lever (Stainless Steel Bolt T25) - Guide DB5 Elixir 9/7/CR Mag/X0/ XX, Qty 1
5	11.5315.048.080	MMX Clamp, Black, Lever (Ti Bolt T25) - Guide DB5 Elixir 9/7/CR Mag/X0/ XX, Qty 1
6	11.5309.765.000	Hydraulic Disc Brake Hose Fitting Kit, Qty 1 (threaded hose barb, comp fitting, comp nut)
7	11.5309.766.000	Hydraulic Disc Brake Compression Hose Nut, Qty 5
8	11.5311.555.000	Hydraulic Disc Brake Compression Hose Fitting, Qty 10
9	11.5311.556.000	Hydraulic Disc Brake Hose Barb, Threaded, Qty 10
10	00.5016.168.130	Hydraulic Line Kit - GUIDE R/RS/RSC, DB5, 2000mm, Stainless, Black, Qty 1
10	00.5016.168.140	Hydraulic Line Kit - GUIDE R/RS/RSC, DB5, 2000mm, 2000mm, Stainless, White, Qty 1

GUIDE R/RS - HYDRAULIC DISC BRAKE - CALIPERS

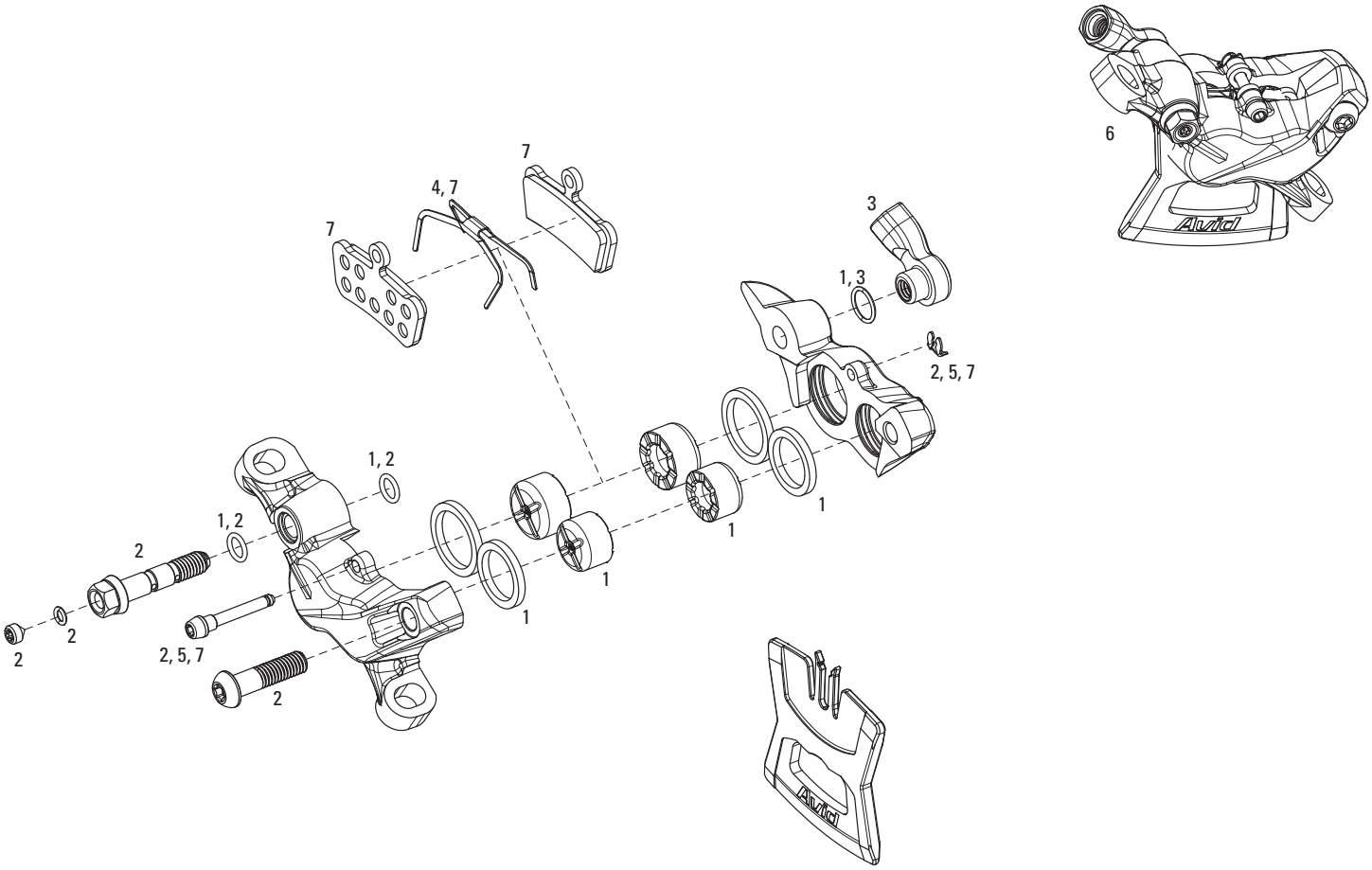

NOTES:
1. See lever pages for exploded view of Hydraulic Line kits

No.	Part Number	Description
1	11.5018.020.001	Caliper Piston Kit (includes 2-16mm & 2-14mm caliper pistons, seals & orings) - Guide R,RS,RSC
2	11.5018.021.001	Caliper Hardware Kit (includes black body bolt, banjo bolt, bleed screw, pad pin) - GUIDE R/RS
3	11.5015.060.020	Banjo Kit, Black, Qty 1 -Elixir R/CR/CR Mag/X0/Elixir 9/Elixir 7/Guide R,RS,RSC
4	11.5018.006.000	Pad Spreader, Qty 2- Trail/Guide R,RS,RSC
5	11.5015.036.010	Pad Pin Kit, Silver, Steel, Qty 2 - Elixir/Code/Guide R,RS,RSC
5	11.5015.036.020	Pad Pin Kit, Black, Aluminum, Qty 2 - Elixir/Code/Guide R,RS,RSC
6	11.5018.008.020	Caliper Assembly Standard (non-CPS) Black (assembled, no hose) - GUIDE R/RS
6	11.5018.008.021	Caliper Assembly Standard (non-CPS) Grey (assembled, no hose) - GUIDE R/RS
7	00.5318.003.003	Disc Brake Pads Organic/Alum, (1 set) - Trail/Guide
7	00.5318.003.004	Disc Brake Pads Organic/Steel, (1 set) - Trail/Guide
7	00.5318.003.005	Disc Brake Pads Sintered/Steel, (1 set) - Trail/Guide
ns	00.5016.168.130	Hydraulic Line Kit - GUIDE R/RS/RSC, DB5, 2000mm, Stainless, Black, Qty 1
ns	00.5016.168.140	Hydraulic Line Kit - GUIDE R/RS/RSC, DB5, 2000mm, 2000mm, Stainless, White, Qty 1
ns	11.5309.765.000	Hydraulic Disc Brake Hose Fitting Kit, Qty 1 (threaded hose barb, comp fitting, comp nut)
ns	11.5309.766.000	Hydraulic Disc Brake Compression Hose Nut, Qty 5
ns	11.5311.555.000	Hydraulic Disc Brake Compression Hose Fitting, Qty 10
ns	11.5311.556.000	Hydraulic Disc Brake Hose Barb, Threaded, Qty 10

XX (2010-2011) / XX WORLD CUP (2011-2014) - HYDRAULIC DISC BRAKE - LEVERS

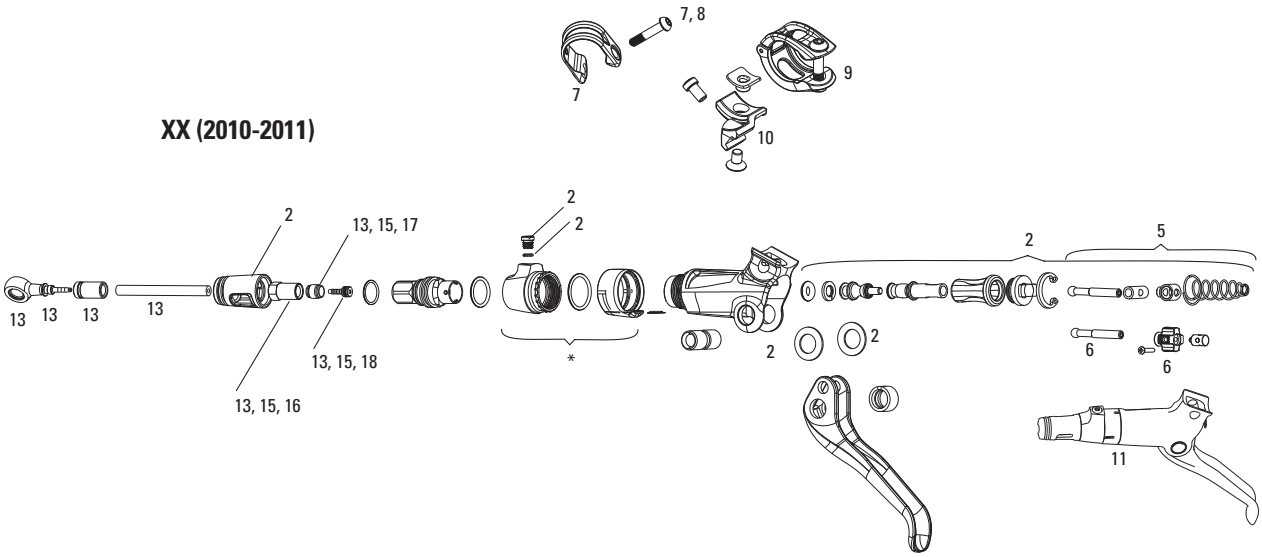

XX (2010-2011)

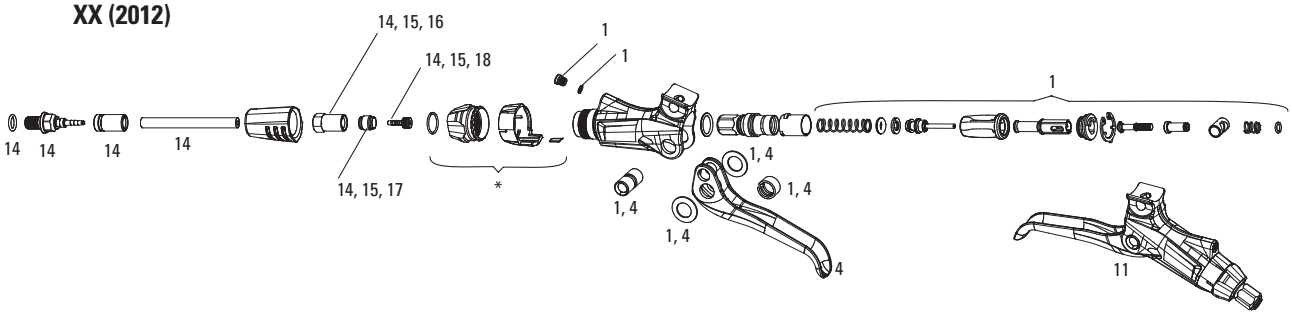

XX (2012)

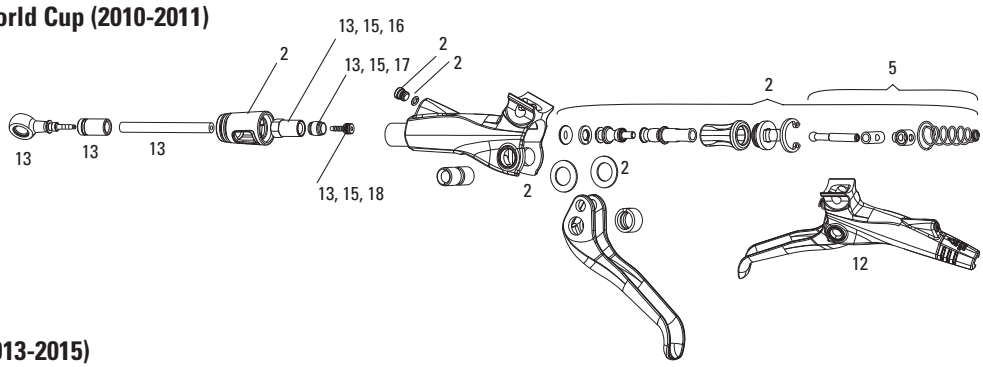

XX World Cup (2010-2011)

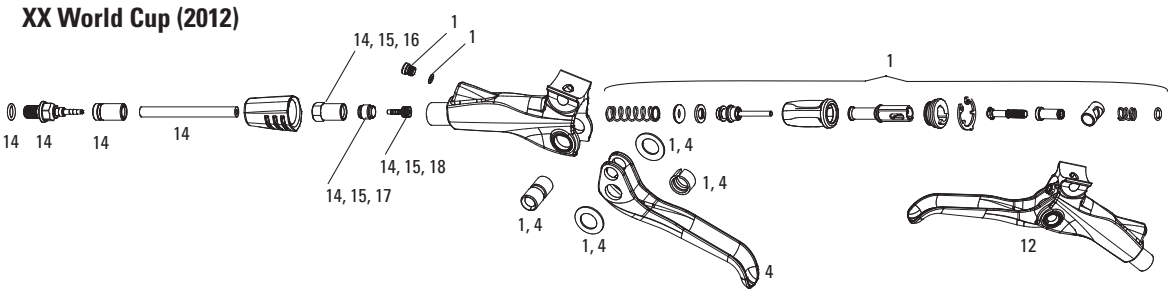

XX (2013-2015)
XX World Cup (2012)

Notes:
1. *Pad contact adjuster assembly and parts are not serviceable and are not replaceable. Damage to pad contact adjuster assembly or parts requires replacement of complete assembled lever assembly.
2. Lever Internals kit is pre-assembled

XX (2010-2011) / XX WORLD CUP (2011-2014) - HYDRAULIC DISC BRAKE - LEVERS

No.	Part Number	Description
1	11.5015.064.070	Lever Internals/Service kit Carbon Qty 1 - 2012-2015 XX/2012 XXWC/2013-2015 X0 GS
2	11.5015.064.080	Lever Internals/Service Kit - XX 2010-2011/X0 2011-2012/X0 MY12 (Produced after August 2011) Qty 1
4	11.5018.003.006	Lever Blade XX Carbon Black Qty 1 2012-2015
5	11.5015.057.000	Lever Pushrod/Cross Dowel/Return Spring - Elixir CR Mag/X0 Carbon/XX
6	11.5015.061.010	Lever External Reach Adjuster Knob/Pushrod Kit - Elixir CR Mag/XX
7	11.5315.048.010	Discrete Bar Clamp, Black, Lever (Stainless Steel Bolt T25) Elixir 9/7/CR Mag/X0/ XX, Qty 1
7	11.5315.048.020	Discrete Bar Clamp, Silver, Lever (Ti Bolt T25) - Elixir 9/7/CR Mag/X0/ XX, Qty 1
8	11.5315.048.030	Bolt, Bar Clamp Lever (Stainless Steel T25) - Elixir 9/7/CR Mag/X0/ XX, Qty 2
8	11.5315.048.040	Bolt, Bar Clamp Lever (Ti T25) - Elixir 9/7/CR Mag/X0/ XX, Qty 2
9	11.5315.048.050	MMX Clamp, Silver, Lever (Stainless Steel Bolt T25) - Guide DB5 Elixir 9/7/CR Mag/X0/ XX, Qty 1
9	11.5315.048.060	MMX Clamp, Silver, Lever (Ti Bolt T25) - Guide DB5 Elixir 9/7/CR Mag/X0/ XX, Qty 1
9	11.5315.048.070	MMX Clamp, Black, Lever (Stainless Steel Bolt T25) - Guide DB5 Elixir 9/7/CR Mag/X0/ XX, Qty 1
9	11.5315.048.080	MMX Clamp, Black, Lever (Ti Bolt T25) - Guide DB5 Elixir 9/7/CR Mag/X0/ XX, Qty 1
10	11.5315.049.010	MMX/Shifter Mounting Bracket, Left - Elixir CR Mag/X0/XX, Stainless Hardware
10	11.5315.049.020	MMX/Shifter Mounting Bracket, Right - Elixir CR Mag/X0/XX, Stainless Hardware
12	11.5018.004.021	Carbon Lever Assy XX Carbon (tooled reach adjust), Hinged Clamp/MMX compatible, Obsidian Black 2013-2014
13	00.5016.168.030	Hydraulic Line Kit - XX, Juicy Ultimate, Juicy 7, Juicy 5, 2000mm, Aluminum Banjo, Black, Qty 1
13	00.5016.168.040	Hydraulic Line Kit - XX, Juicy Ultimate, Juicy 7, Juicy 5, 2000mm, Aluminum Banjo, White, Qty 1
14	00.5016.168.050	Hydraulic Line Kit - Elixir 5, Elixir 7, Elixir 9, Elixir R,Elixir CR, Elixir X0, Elixir CR Mag, 2000mm, Stainless, Black, Qty 1
14	00.5016.168.060	Hydraulic Line Kit - Elixir 5, Elixir 7, Elixir 9, Elixir R,Elixir CR, Elixir X0, Elixir CR Mag, 2000mm, Stainless, White, Qty 1
15	11.5309.765.000	Hydraulic Disc Brake Hose Fitting Kit, Qty 1 (threaded hose barb, comp fitting, comp nut)
16	11.5309.766.000	Hydraulic Disc Brake Compression Hose Nut, Qty 5
17	11.5311.555.000	Hydraulic Disc Brake Compression Hose Fitting, Qty 10
18	11.5311.556.000	Hydraulic Disc Brake Hose Barb, Threaded, Qty 10
ns	11.5315.050.010	Elixir Lever Pivot Bearing Press Tool (required for 2010 Elixir CR Mag and XX)

XX / XX WORLD CUP - HYDRAULIC DISC BRAKE - CALIPERS

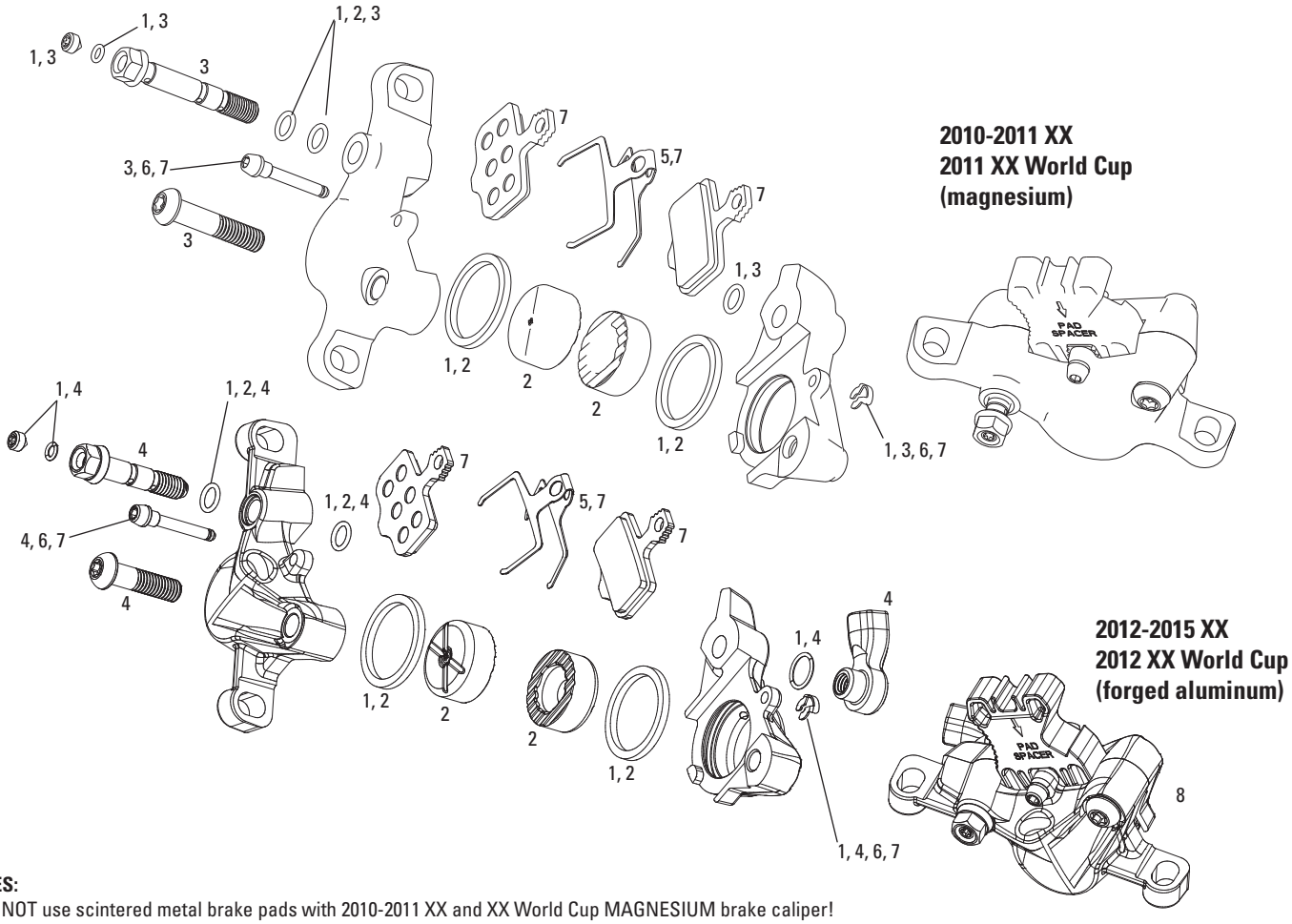

NOTES:

1. Do NOT use scintered metal brake pads with 2010-2011 XX and XX World Cup MAGNESIUM brake caliper!
2. See lever pages for exploded view of Hydraulic Line kits

No.	Part Number	Description
1	11.5015.031.000	Elixir Caliper Service Kit, Qty 1
2	11.5015.032.000	Elixir Caliper Piston Kit, Qty 1
3	11.5015.033.020	XX/XXWC Caliper Hardware Kit (titanium torx - banjo bolt, caliper bolt, pad pin) 2010-2011
4	11.5015.033.070	XX Caliper Hardware Kit, Ti, Qty 1 (banjo bolt, caliper bolt, pad pin) 2012-2015
5	11.5015.035.000	Elixir/DB Pad Spreader Kit, Qty 2
6	11.5015.036.020	Pad Pin Kit, Black, Aluminum, Qty 2 - Elixir/Code/Guide R,RS,RSC
7	00.5315.035.010	Disc Brake Pads Metal Scintered/Steel- Elixir/DB (1 set)
7	00.5315.035.020	Disc Brake Pads Organic/Alum- Elixir/DB (1 set)
7	00.5315.035.030	Disc Brake Pads Organic/Steel- Elixir/DB (1 set)
8	11.5015.037.360	Caliper Assemby (assembled, no hose) - XX World Cup 2012-2013
8	11.5015.037.350	Caliper Assemby (assembled, no hose) - XX 2012-2015
		USE WITH 2010-2011 XX and XX WORLD CUP CALIPER
ns	00.5016.168.030	Hydraulic Line Kit - XX, Juicy Ultimate, Juicy 7, Juicy 5, 2000mm, Aluminum Banjo, Black, Qty 1
ns	00.5016.168.040	Hydraulic Line Kit - XX, Juicy Ultimate, Juicy 7, Juicy 5, 2000mm, Aluminum Banjo, White, Qty 1
		USE WITH 2012-2015 XX and 2012 XX WORLD CUP CALIPER
ns	00.5016.168.050	Hydraulic Line Kit - Elixir 5, Elixir 7, Elixir 9, Elixir R,Elixir CR, Elixir X0, Elixir CR Mag, 2000mm, Stainless, Black, Qty 1
ns	00.5016.168.060	Hydraulic Line Kit - Elixir 5, Elixir 7, Elixir 9, Elixir R,Elixir CR, Elixir X0, Elixir CR Mag, 2000mm, Stainless, White, Qty 1

2013-2015 X0
aluminum lever blade

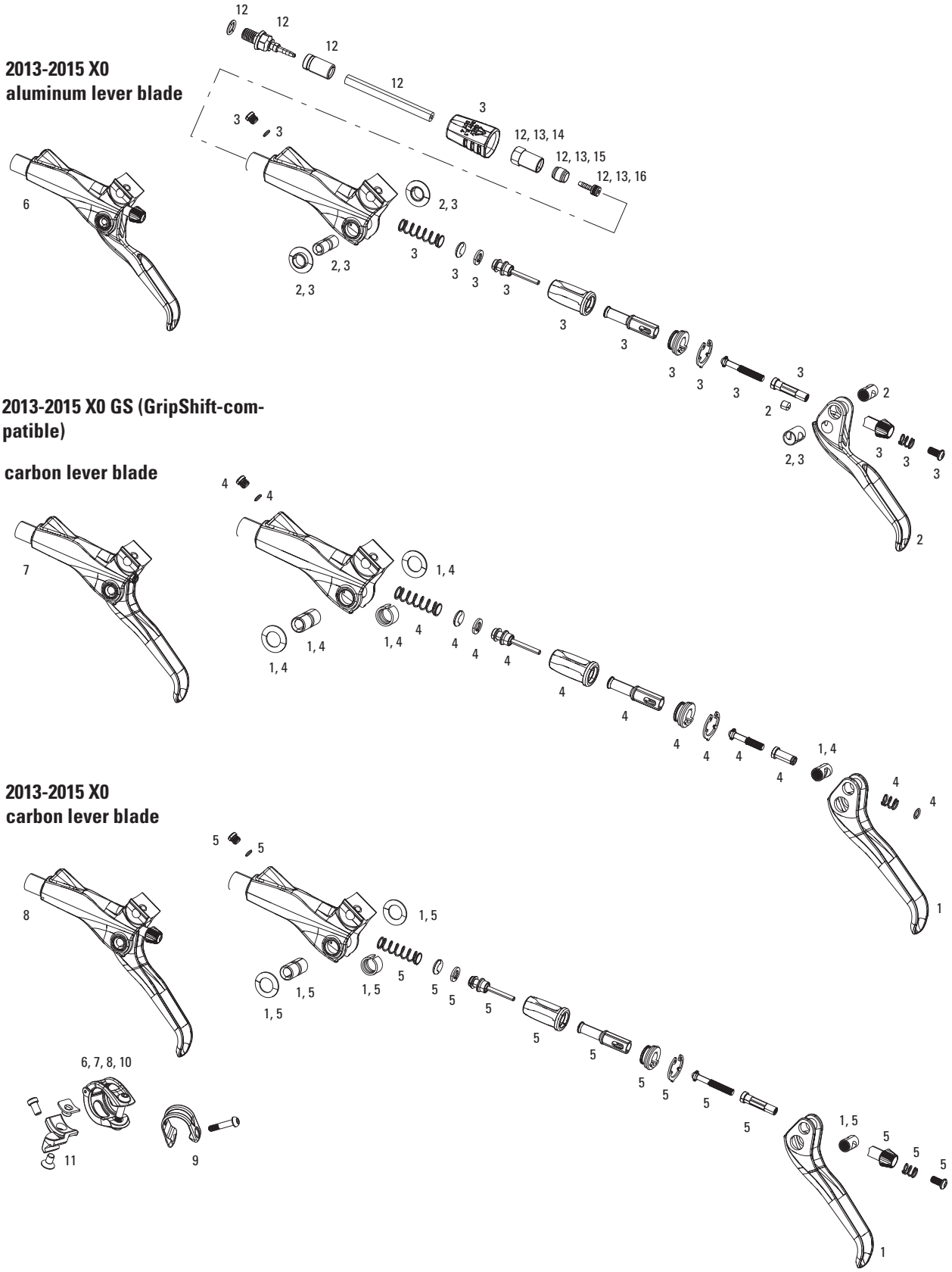

2013-2015 X0 GS (GripShift-compatible)

carbon lever blade

2013-2015 X0
carbon lever blade

Notes:
1. Lever Internals kit is pre-assembled

X0 (2013-2015) - HYDRAULIC DISC BRAKE - LEVERS

No.	Part Number	Description
1	11.5018.003.004	Lever Blade Carbon - X0 Qty 1 B1 (2012-2015)
2	11.5018.003.005	Lever Blade Aluminum Black - X0 Black Qty 1 B1 (2012-2015)
3	11.5015.064.050	Lever Internals/Service Kit, Aluminum Blade - Elixir 9/ Elixir 7/ Elixir 7 Trail Elixir Code-R/X0 2013-2015
4	11.5015.064.070	Lever Internals/Service kit Carbon Qty 1 - 2012-2015 XX/XXWC/2013-2015 X0 GS
5	11.5015.064.060	Lever Internals/Service Kit, Carbon Blade -'Elixir 9/Elixir 7/Elixir 7 Trail/Code-R /X0 2013-2015
6	11.5018.004.010	Lever Assy X0 Aluminum w/External Reach Adjuster, Hinged Clamp/MMX compatible, Black/Red, Aluminum Lever (assembled, no hose, includes hinged clamp) 2013-2015
6	11.5018.004.011	Lever Assy X0 Aluminum w/External Reach Adjuster, Hinged Clamp/MMX compatible, Black/Black, Aluminum Lever (assembled, no hose, includes hinged clamp) 2013-2015
6	11.5018.004.012	Lever Assy X0 Aluminum w/External Reach Adjuster, Hinged Clamp/MMX compatible, Polished Silver, Aluminum Lever (assembled, no hose, includes hinged clamp) 2013-2015
7	11.5018.004.007	Lever Assy X0 GS Carbon (tooled reach adjust), Hinged Clamp/MMX compatible, Black/Red, Carbon Lever (assembled, no hose, includes hinged clamp) 2013-2015
7	11.5018.004.008	Lever Assy X0 GS Carbon (tooled reach adjust), Hinged Clamp/MMX compatible, Black/Black, Carbon Lever (assembled, no hose, includes hinged clamp) 2013-2015
7	11.5018.004.009	Lever Assy X0 GS Carbon (tooled reach adjust), Hinged Clamp/MMX compatible, Polished Silver, Carbon Lever (assembled, no hose, includes hinged clamp) 2013-2015
8	11.5018.004.004	Lever Assy X0 Carbon w/External Reach Adjuster, Hinged Clamp/MMX compatible, Black/Red, Carbon Lever (assembled, nohose, includes hinged clamp) 2013-2015
8	11.5018.004.005	Lever Assy X0 Carbon w/External Reach Adjuster, Hinged Clamp/MMX compatible, Black/Black, Carbon Lever (assembled, no hose, includes hinged clamp) 2013-2015
8	11.5018.004.006	Lever Assy X0 Carbon w/External Reach Adjuster, Hinged Clamp/MMX compatible, Polished Silver, Carbon Lever (assembled, no hose, includes hinged clamp) 2013-2015
9	11.5315.048.010	Discrete Bar Clamp, Black, Lever (Stainless Steel Bolt T25) Elixir 9/7/CR Mag/X0/ XX, Qty 1
9	11.5315.048.020	Discrete Bar Clamp, Silver, Lever (Ti Bolt T25) - Elixir 9/7/CR Mag/X0/ XX, Qty 1
9	11.5315.048.090	Discrete Bar Clamp, Black, Lever (Ti Bolt T25) - XX World Cup, Qty 1
9	11.5315.048.100	Discrete Bar Clamp, Black, Lever (Ti Bolt T25) - XX World Cup, Qty 2
10	11.5315.048.050	MMX Clamp, Silver, Lever (Stainless Steel Bolt T25) - Guide DB5 Elixir 9/7/CR Mag/X0/ XX, Qty 1
10	11.5315.048.060	MMX Clamp, Silver, Lever (Ti Bolt T25) - Guide DB5 Elixir 9/7/CR Mag/X0/ XX, Qty 1
10	11.5315.048.070	MMX Clamp, Black, Lever (Stainless Steel Bolt T25) - Guide DB5 Elixir 9/7/CR Mag/X0/ XX, Qty 1
10	11.5315.048.080	MMX Clamp, Black, Lever (Ti Bolt T25) - Guide DB5 Elixir 9/7/CR Mag/X0/ XX, Qty 1
11	11.5315.049.010	MMX/Shifter Mounting Bracket, Left - Elixir CR Mag/X0/XX, Stainless Hardware
11	11.5315.049.020	MMX/Shifter Mounting Bracket, Right - Elixir CR Mag/X0/XX, Stainless Hardware
12	00.5016.168.050	Hydraulic Line Kit - Elixir 5, Elixir 7, Elixir 9, Elixir R,Elixir CR, Elixir X0, Elixir CR Mag, 2000mm, Stainless, Black, Qty 1
12	00.5016.168.060	Hydraulic Line Kit - Elixir 5, Elixir 7, Elixir 9, Elixir R,Elixir CR, Elixir X0, Elixir CR Mag, 2000mm, Stainless, White, Qty 1
13	11.5309.765.000	Hydraulic Disc Brake Hose Fitting Kit, Qty 1 (threaded hose barb, comp fitting, comp nut)
14	11.5309.766.000	Hydraulic Disc Brake Compression Hose Nut, Qty 5
15	11.5311.555.000	Hydraulic Disc Brake Compression Hose Fitting, Qty 10
16	11.5311.556.000	Hydraulic Disc Brake Hose Barb, Threaded, Qty 10

X0 - HYDRAULIC DISC BRAKE - CALIPERS

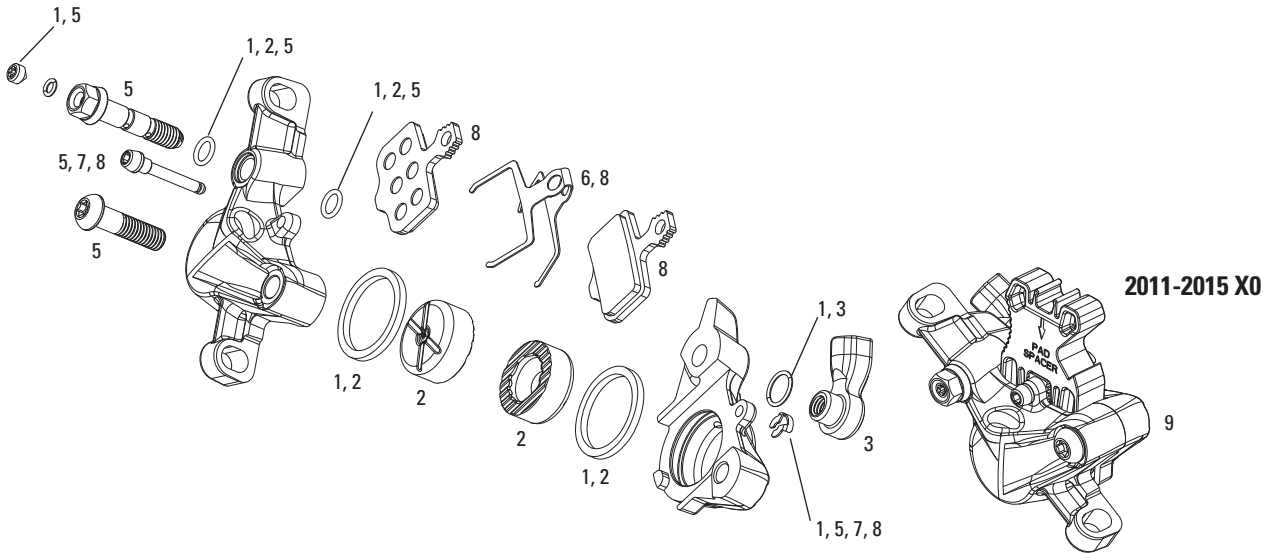

NOTES:
1. See lever pages for exploded view of Hydraulic Line kits

No.	Part Number	Description
1	11.5015.031.000	Elixir Caliper Service Kit, Qty 1
2	11.5015.032.000	Elixir Caliper Piston Kit, Qty 1
3	11.5015.060.020	Banjo Kit, Black, Qty 1 -Elixir R/CR/CR Mag/X0/Elixir 9/Elixir 7/Guide R,RS,RSC
5	11.5015.033.030	X0 Caliper Hardware Kit (stainless torx - banjo bolt, caliper bolt, pad pin)
6	11.5015.035.000	Elixir/DB Pad Spreader Kit, Qty 2
7	11.5015.036.010	Pad Pin Kit, Silver, Steel, Qty 2 - Elixir/Code/Guide R,RS,RSC
8	00.5315.035.010	Disc Brake Pads Metal Scintered/Steel- Elixir/DB (1 set)
8	00.5315.035.020	Disc Brake Pads Organic/Alum- Elixir/DB (1 set)
8	00.5315.035.030	Disc Brake Pads Organic/Steel- Elixir/DB (1 set)
9	11.5015.037.210	Caliper Assembly (CPS) Red/Black - X0 (assembled, no hose)
9	11.5015.037.230	Caliper Assembly (CPS) Black/Black - X0 (assembled, no hose)
9	11.5015.037.340	Caliper Assembly (CPS) Silver - X0 (assembled, no hose)
9	11.5018.008.006	Caliper Assembly X0 Standard (non-CPS) Black/Red (assembled,no hose) 2013-2015
9	11.5018.008.007	Caliper Assembly X0 Standard (non-CPS) Black/Black (assembled, no hose) 2013-2015
9	11.5018.008.008	Caliper Assembly X0 Standard (non-CPS) Polished Silver (assembled, no hose) 2013-2015
ns	00.5016.168.050	Hydraulic Line Kit - Elixir 5, Elixir 7, Elixir 9, Elixir R,Elixir CR, Elixir X0, Elixir CR Mag, 2000mm, Stainless, Black, Qty 1
ns	00.5016.168.060	Hydraulic Line Kit - Elixir 5, Elixir 7, Elixir 9, Elixir R,Elixir CR, Elixir X0, Elixir CR Mag, 2000mm, Stainless, White, Qty 1

DB5 - HYDRAULIC DISC BRAKE - LEVERS

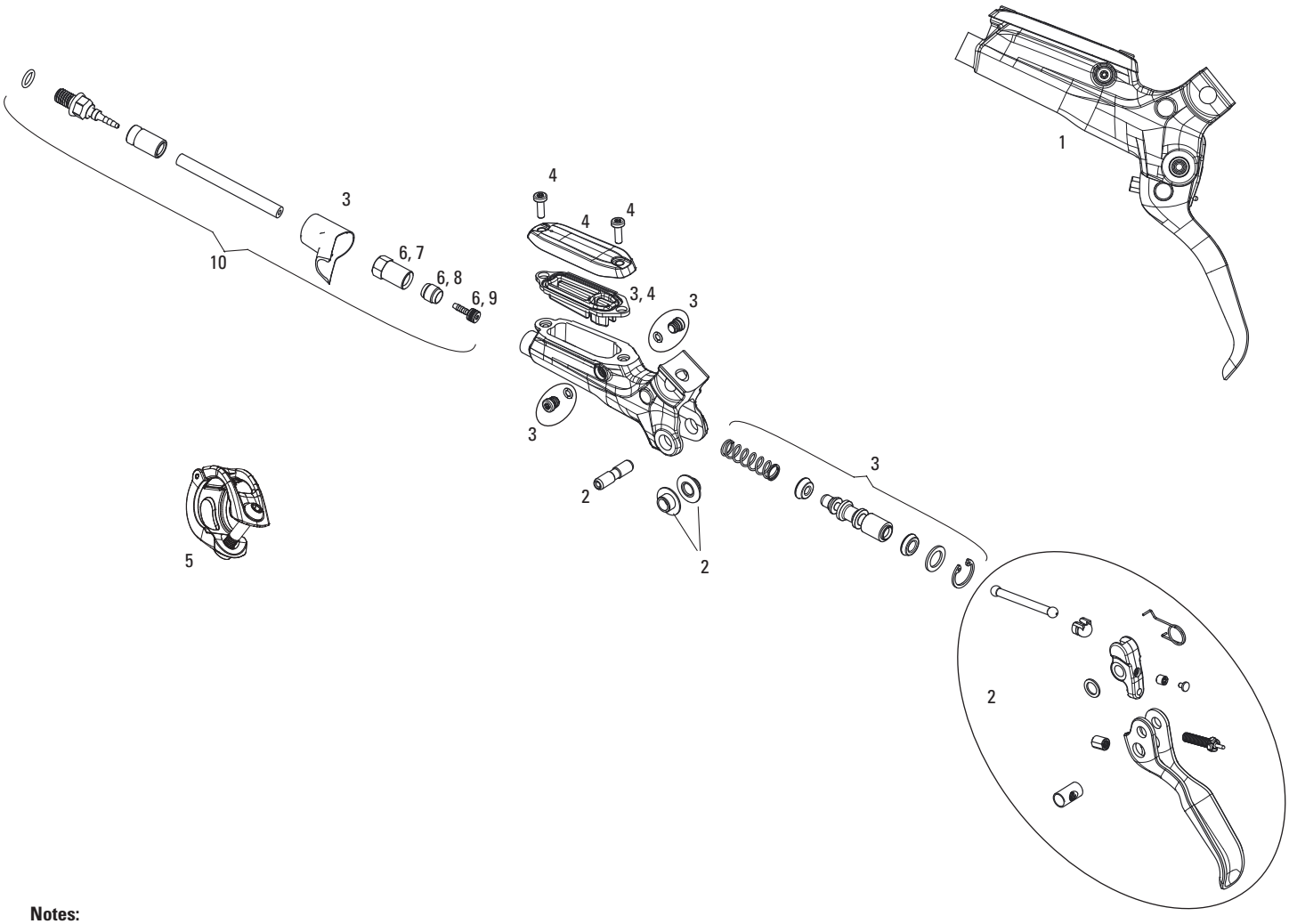

Notes:

1. Lever Internals kit is pre-assembled

No.	Part Number	Description
1	11.5018.004.022	Lever Assembly, Aluminum lever, Hinged Clamp/MMX compatible, Black (assembled, no hose) - DB5
1	11.5018.004.023	Lever Assembly, Aluminum lever, Hinged Clamp/MMX compatible, White (assembled, no hose) - DB5
2	11.5018.003.008	Lever Blade Aluminum Black (includes cam guide) - Guide R/DB5 Qty 1
3	11.5018.005.003	Lever Internals Guide R/DB5 Qty 1
4	11.5018.022.000	Reservoir Cap Kit (includes reservoir cap, bladder and hardware) - Guide R/RS/RSC/DB5
5	11.5315.048.050	MMX Clamp, Silver, Lever (Stainless Steel Bolt T25) - Guide DB5 Elixir 9/7/CR Mag/X0/ XX, Qty 1
5	11.5315.048.060	MMX Clamp, Silver, Lever (Ti Bolt T25) - Guide DB5 Elixir 9/7/CR Mag/X0/ XX, Qty 1
5	11.5315.048.070	MMX Clamp, Black, Lever (Stainless Steel Bolt T25) - Guide DB5 Elixir 9/7/CR Mag/X0/ XX, Qty 1
5	11.5315.048.080	MMX Clamp, Black, Lever (Ti Bolt T25) - Guide DB5 Elixir 9/7/CR Mag/X0/ XX, Qty 1
6	11.5309.765.000	Hydraulic Disc Brake Hose Fitting Kit, Qty 1 (threaded hose barb, comp fitting, comp nut)
7	11.5309.766.000	Hydraulic Disc Brake Compression Hose Nut, Qty 5
8	11.5311.555.000	Hydraulic Disc Brake Compression Hose Fitting, Qty 10
9	11.5311.556.000	Hydraulic Disc Brake Hose Barb, Threaded, Qty 10
10	00.5016.168.130	Hydraulic Line Kit - GUIDE R/RS/RSC, DB5, 2000mm, Stainless, Black, Qty 1
10	00.5016.168.140	Hydraulic Line Kit - GUIDE R/RS/RSC, DB5, 2000mm, 2000mm, Stainless, White, Qty 1

DB 5 - HYDRAULIC DISC BRAKE - CALIPERS

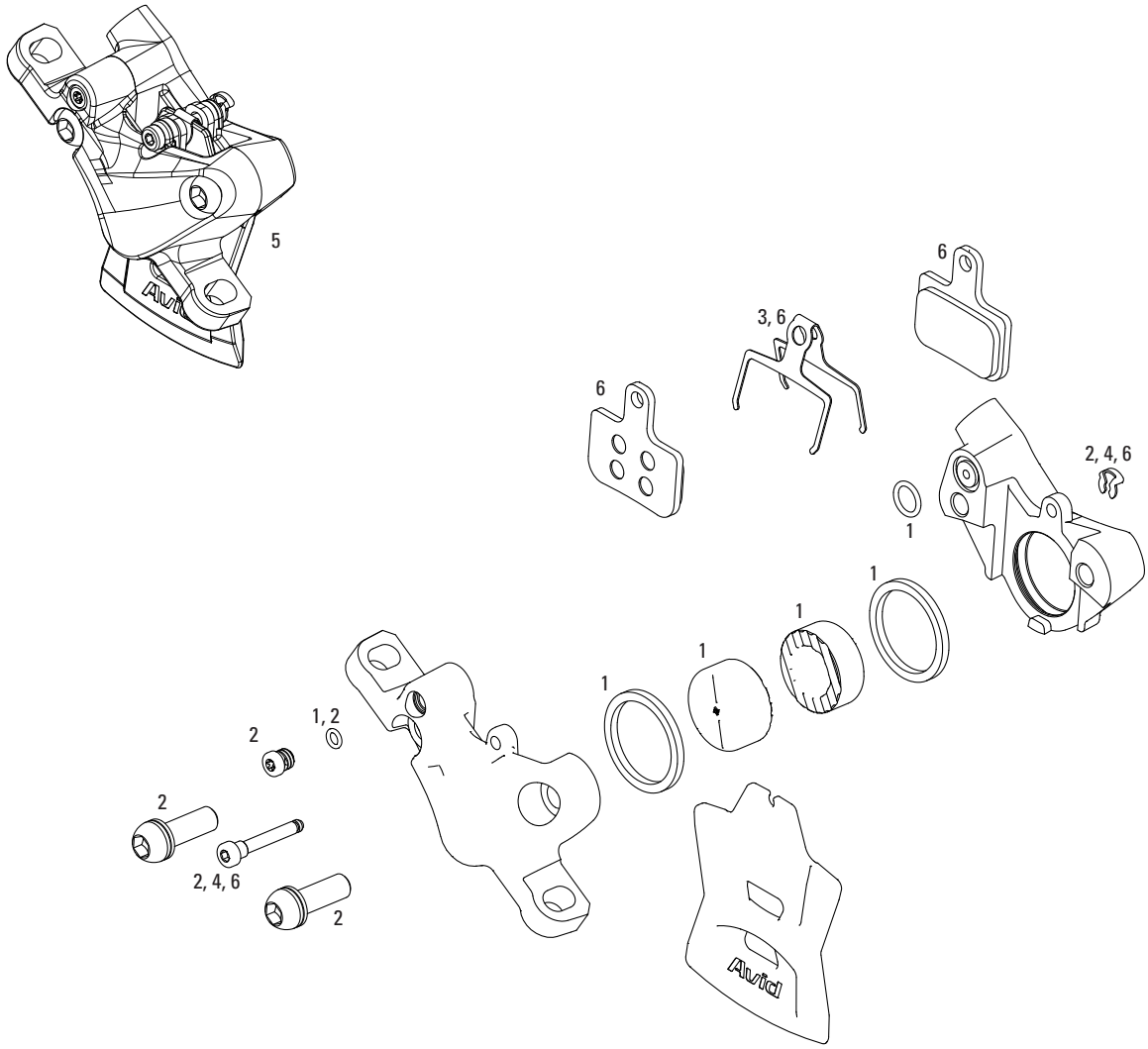

NOTES:
1. See lever pages for exploded view of Hydraulic Line kits

No.	Part Number	Description
1	11.5018.020.000	Caliper Piston Kit (includes 2-21mm caliper pistons, seals & orings) - DB5
2	11.5018.021.000	Caliper Hardware Kit (includes body bolts, bleed screw, pad pin) - DB5
3	11.5015.035.000	Elixir/DB Pad Spreader Kit, Qty 2
4	11.5015.036.000	Pad Pin Kit, Black Qty 2 - Elixir
5	11.5018.008.018	Caliper Assembly Standard (non-CPS) Black (assembled, no hose) - DB5
5	11.5018.008.019	Caliper Assembly Standard (non-CPS) White (assembled, no hose) - DB5
6	00.5315.035.010	Disc Brake Pads Metal Scintered/Steel- Elixir/DB (1 set)
6	00.5315.035.020	Disc Brake Pads Organic/Alum- Elixir/DB (1 set)
6	00.5315.035.030	Disc Brake Pads Organic/Steel- Elixir/DB (1 set)
ns	00.5016.168.130	Hydraulic Line Kit - GUIDE R/RS/RSC, DB5, 2000mm, Stainless, Black, Qty 1
ns	00.5016.168.140	Hydraulic Line Kit - GUIDE R/RS/RSC, DB5, 2000mm, 2000mm, Stainless, White, Qty 1
ns	11.5309.765.000	Hydraulic Disc Brake Hose Fitting Kit, Qty 1 (threaded hose barb, comp fitting, comp nut)
ns	11.5309.766.000	Hydraulic Disc Brake Compression Hose Nut, Qty 5
ns	11.5311.555.000	Hydraulic Disc Brake Compression Hose Fitting, Qty 10
ns	11.5311.556.000	Hydraulic Disc Brake Hose Barb, Threaded, Qty 10

Centerline

140mm

160mm

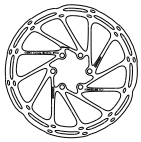

170mm

180mm

200mm

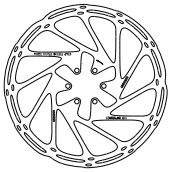

NOTES:
1. All rotors pictured are for reference; available if listed below.

Part Number	Description
00.5018.037.000	Rotor Centerline 140mm
00.5018.037.001	Rotor Centerline 160mm
00.5018.037.002	Rotor Centerline 170mm
00.5018.037.003	Rotor Centerline 180mm
00.5018.037.004	Rotor Centerline 200mm
11.5363.012.300	Rotor Bolt Kit (Qty 6)
11.5315.043.000	Rotor Bolt Kit, Ti (Qty 6)
11.5315.040.000	AVID Rotor/Hub Shim

SRAM Disc Brake Caliper Mounting Bracket and Spacer Configurations

Use the chart below to identify the parts you intend to use, then reference the chart on the reverse side to determine the correct bracket and/or spacers. Consult your retailer for the proper rotor sizes for your bicycle.

Fork/Frame Mount

The mounting specification is determined by the fork/frame manufacturer and is not a reference to the rotor size. Consult your manufacturer for the proper mounting specification.

Fork	140 Post (road)
	160 IS
	160 Post
	200 Post (BoXXer 27.5)
	203 Post (Totem)

Frame	140 IS
	140 Post
	160 Post
	180 Post

Rotor Size (mm)
140, 160, 170, 180, 200, or 203

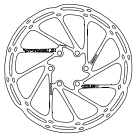

IS Mount

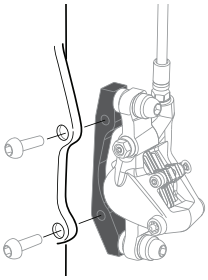

IS Bracket (IS)

Converts IS to Post Mount, required for all IS frames/forks.

Post Mount

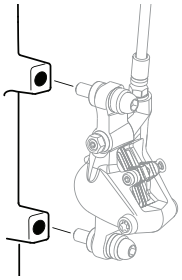

Direct Mount (Direct)

No bracket or spacers needed.

Post Brackets (P)

Post Spacers (S)

CPS

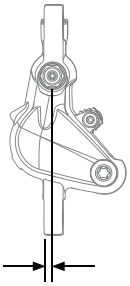

Inline tabs

CPS washers are needed between caliper and mount.

Standard

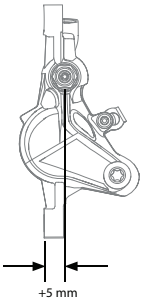

Offset tabs

No CPS washers are needed between caliper and mount (unless otherwise specified).

⚠WARNING - CRASH HAZARD

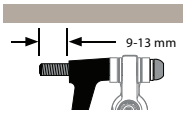

There must be 9-13 mm of mounting bolt thread engagement when mounting brake calipers to forks and frames either with or without brackets and/or spacers. Riding a bike with improper bolt engagement can allow the brakes to disengage from the bicycle, which can lead to a crash and serious injury or death to the rider.

Notes:

Forks explained

- 140 Post (Road)
- 160 IS (Mountain)
- 160 Post (BoXXer 26" and Current Mountain)
- 200 Post (BoXXer 27.5")
- 203 Post (Totem)

SRAM Disc Brake Caliper Mounting Bracket and Spacer Configurations

	Rotor Size (mm)						
Fork/Frame	140 mm	160 mm	170 mm	180 mm	185 mm	200 mm	203 mm
140 IS	0 IS	20 IS	30 IS	40 IS	45 IS	60 IS	-
140 Post	0 Direct	20 S/20 P*	30 P	40 P	-	-	-
160 IS	-	0 IS	-	20 IS	25 IS	40 IS	-
160 Post	-	Direct	10 S	20 S/20 P*	25 S	40 P	-
180 Post	-	-	-	Direct	-	20 S/20 P*	-
200 Post (BXR 27)	-	-	-	-	-	Direct	3 S
203 Post (Totem)	-	-	-	-	-	-	Direct

*20 P is only available on products from the Original Equipment bicycle Manufacturer (OEM)

CPS

Direct

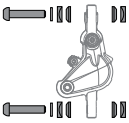

Upper Bolt: 29 mm
Upper Spacer: N/A
Lower Bolt: 29 mm
Lower Spacer: N/A
Direct Post Mount

10 S

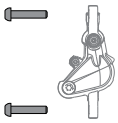

Upper Bolt: 37.5 mm
Upper Spacer: 12.5 mm
Lower Bolt: 32 mm
Lower Spacer: 7.5 mm
10 Post Spacer

20 S/20 P*

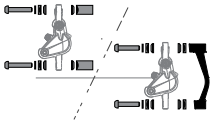

Upper Bolt: 43 mm
Upper Spacer: 17.5 mm (20 P: N/A)
Lower Bolt: 37.5 mm
Lower Spacer: 12.5 mm (20 P: N/A)
20 Post Spacer/20 Post Bracket

25 S

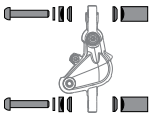

Upper Bolt: 46 mm
Upper Spacer: 20.5 mm
Lower Bolt: 40.5 mm
Lower Spacer: 15 mm
25 Post Spacer

30 P

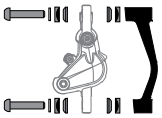

Upper Bolt: 50 mm
Upper Spacer: N/A
Lower Bolt: 43 mm
Lower Spacer: N/A
30 Post Bracket

40 P

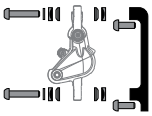

Upper Bolt: 29 mm
Upper Spacer: N/A
Lower Bolt: 29 mm
Lower Spacer: N/A
40 Post Bracket

IS

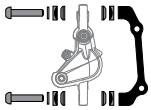

Upper Bolt: 29 mm
Upper Spacer: N/A
Lower Bolt: 29 mm
Lower Spacer: N/A
0 IS, 20 IS, 30 IS, 40 IS, 60 IS

Standard

Direct

Upper Bolt: 16.8 mm
Upper Spacer: N/A
Lower Bolt: 16.8 mm
Lower Spacer: N/A
Direct Post Mount

3 S

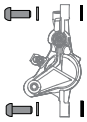

Upper Bolt: TBD mm
Upper Spacer: TBD mm
Lower Bolt: TBD mm
Lower Spacer: TBD mm
3 Post Spacer

10 S

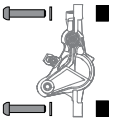

Upper Bolt: 24 mm
Upper Spacer: 6 mm
Lower Bolt: 24 mm
Lower Spacer: 6 mm
10 Post Spacer

20 S/20 P*

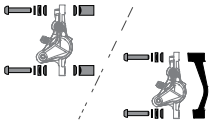

Upper Bolt: 37.5 mm
Upper Spacer: 12.5 mm (20 P: N/A)
Lower Bolt: 32 mm
Lower Spacer: 7.5 mm (20 P: N/A)
20 Post Spacer/20 Post Bracket

25 S

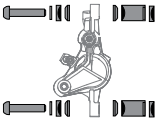

Upper Bolt: 43 mm
Upper Spacer: 17.5 mm
Lower Bolt: 37.5 mm
Lower Spacer: 10 mm
25 Post Spacer

30 P

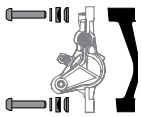

Upper Bolt: 46 mm
Upper Spacer: N/A
Lower Bolt: 37.5 mm
Lower Spacer: N/A
30 Post Bracket

40 P

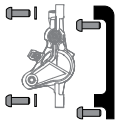

Upper Bolt: 16.8 mm
Upper Spacer: N/A
Lower Bolt: 16.8 mm
Lower Spacer: N/A
40 Post Bracket

IS

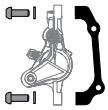

Upper Bolt: 16.8 mm
Upper Spacer: N/A
Lower Bolt: 16.8 mm
Lower Spacer: N/A
0 IS, 20 IS, 30 IS, 40 IS, 60 IS

MOUNTING BRACKETS & TOWERS/SPACERS / HARDWARE

Standard: GUIDE, TRAIL, DB, Road Hydraulic & (XX, X0 &E1 2013 +)

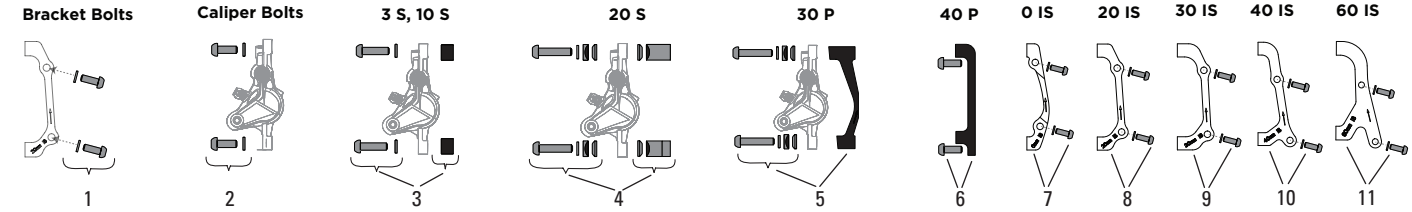

No.	Part Number	Description
1	00.5318.005.000	Bracket Mounting Bolts - Stainless (2 pcs)
1	00.5318.005.001	Bracket Mounting Bolts - Titanium T25 (2 pcs)
2	00.5318.006.000	Caliper Mounting Hardware (also Direct Mount) Stainless - Includes Caliper Mounting Bolts & washers (CPS & Standard)
2	00.5318.006.001	Caliper Mounting Hardware (also Direct Mount) Titanium T25 -Includes Caliper Mounting Bolts & washers (Standard)
3	00.5318.008.005	Post Spacer Set - 3 S (Front 203 BoXXer 27.5”), Includes Stainless Caliper Mounting Bolts (Standard)
3	00.5318.008.000	Post Spacer Set - 10 S (Front 170), Includes Stainless Caliper Mounting Bolts (CPS & Standard)
3	00.5318.008.001	Post Spacer Set - 10 S (Front 170), Includes Titanium T25 Caliper Mounting Bolts (Standard)
4	00.5318.008.003	Post Spacer Set - 20 S (Front 180/Rear 160), Includes Stainless Caliper Mounting Bolts (CPS & Standard)
4	00.5318.008.004	Post Spacer Set - 20 S (Front 180/Rear 160), Includes Titanium T25 Caliper Mounting Bolts (Standard)
4	00.5318.008.005	Post Spacer Set - 20 S (Front 180/Rear 160), Includes Titanium T25 Caliper Mounting Bolts (CPS)
5	00.5318.007.001	Post Bracket - 30 P (Rear 170), Includes Titanium T25 Caliper Mounting Bolts (Standard)
6	00.5318.007.003	Post Bracket - 40 P (Front 200/Rear 180), Includes StainlessBracket Mounting Bolts
7	00.5318.009.000	IS Bracket - 0 IS (Front 160/Rear 140) Includes Stainless Bracket Mounting Bolts
8	00.5318.009.001	IS Bracket - 20 IS (Front 180/Rear 160) Includes Stainless Bracket Mounting Bolts
9	00.5318.009.002	IS Bracket - 30 IS (Rear 170) Includes Stainless Bracket Mounting Bolts
10	00.5318.009.003	IS Bracket - 40 IS (Front 200/Rear 180) Includes Stainless Bracket Mounting Bolts
11	00.5318.009.004	IS Bracket - 60 IS (Rear 200) Includes Stainless Bracket Mounting Bolts

CPS: Code, Code R, X0, E9, E7, E5, E3, BB7, BB5, JUICY & (XX, X0 & E1 PRE 2013)

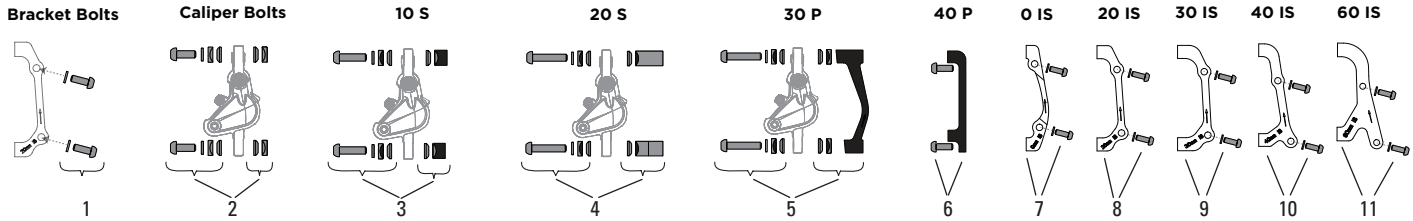

No.	Part Number	Description
1	00.5318.005.000	Bracket Mounting Bolts - Stainless (2 pcs)
1	00.5318.005.001	Bracket Mounting Bolts - Titanium T25 (2 pcs)
2	00.5318.006.000	Caliper Mounting Hardware (also Direct Mount) Stainless - Includes Caliper Mounting Bolts & washers (CPS & Standard)
2	00.5318.006.002	Caliper Mounting Hardware (also Direct Mount) Titanium T25 CPS - Includes Caliper Mounting Bolts & washers (CPS)
3	00.5318.008.000	Post Spacer Set - 10 S (Front 170), Includes Stainless Caliper Mounting Bolts (CPS & Standard)
3	00.5318.008.002	Post Spacer Set - 10 S (Front 170), Includes Titanium T25Caliper Mounting Bolts (CPS)
4	00.5318.008.003	Post Spacer Set - 20 S (Front 180/Rear 160), Includes Stainless Caliper Mounting Bolts (CPS & Standard)
4	00.5318.008.005	Post Spacer Set - 20 S (Front 180/Rear 160), Includes Titanium T25 Caliper Mounting Bolts (CPS)
5	00.5318.007.000	Post Bracket - 30 P (Rear 170), Includes Stainless Caliper Mounting Bolts (CPS & Standard)
5	00.5318.007.002	Post Bracket - 30 P (Rear 170), Includes Titanium T25 Caliper Mounting Bolts (CPS)
6	00.5318.007.003	Post Bracket - 40 P (Front 200/Rear 180), Includes StainlessBracket Mounting Bolts
7	00.5318.009.000	IS Bracket - 0 IS (Front 160/Rear 140) Includes Stainless Bracket Mounting Bolts
8	00.5318.009.001	IS Bracket - 20 IS (Front 180/Rear 160) Includes Stainless Bracket Mounting Bolts
9	00.5318.009.002	IS Bracket - 30 IS (Rear 170) Includes Stainless Bracket Mounting Bolts
10	00.5318.009.003	IS Bracket - 40 IS (Front 200/Rear 180) Includes Stainless Bracket Mounting Bolts
11	00.5318.009.004	IS Bracket - 60 IS (Rear 200) Includes Stainless Bracket Mounting Bolts

NOTES:
1. CPS = Caliper Positioning System. CPS caliper requires CPS hardware
2. Non-CPS/Standard caliper requires non-CPS/Standard hardware.
3. 170mm (Fork-10S, Frame-30P), 180mm (Fork-20P/20IS, Frame-40P/40IS), 200mm (Fork-40P/40IS, Frame-60IS)

MATCHMAKER / BRAKE PADS / HYDRAULIC LINES & FITTINGS

MATCHMAKER / MATCHMAKER X

No.	Part Number	Description
1	00.5315.006.000	Matchmaker Pair
2	00.5315.018.030	MatchMaker X, Pair, Black (compatible with all SRAM MM-compatible shifters)- Guide DB5 Elixir 9/7/CR Mag/X0/ XX
3	00.5315.018.040	MatchMaker X, Single Left, Black (compatible with all SRAM MM-compatible shifters)- Guide DB5 Elixir 9/7/CR Mag/X0/ XX
3	00.5315.018.050	MatchMaker X, Single Right, Black (compatible with all SRAM MM-compatible shifters)- Guide DB5 Elixir 9/7/CR Mag/X0/ XX
4	11.5315.039.000	Matchmaker Hardware Kit
5	11.4315.007.000	PushLoc / Match Maker / Trigger Adaptor Knuckle (L & R)
6	11.5315.048.050	MMX Clamp, Silver, Lever (Stainless Steel Bolt T25) - Guide DB5 Elixir 9/7/CR Mag/X0/ XX, Qty 1
6	11.5315.048.060	MMX Clamp, Silver, Lever (Ti Bolt T25) - Guide DB5 Elixir 9/7/CR Mag/X0/ XX, Qty 1
6	11.5315.048.070	MMX Clamp, Black, Lever (Stainless Steel Bolt T25) - Guide DB5 Elixir 9/7/CR Mag/X0/ XX, Qty 1
6	11.5315.048.080	MMX Clamp, Black, Lever (Ti Bolt T25) - Guide DB5 Elixir 9/7/CR Mag/X0/ XX, Qty 1
7	11.5315.049.010	MMX/Shifter Mounting Bracket, Left - Elixir CR Mag/X0/XX, Stainless Hardware
7	11.5315.049.020	MMX/Shifter Mounting Bracket, Right - Elixir CR Mag/X0/XX, Stainless Hardware

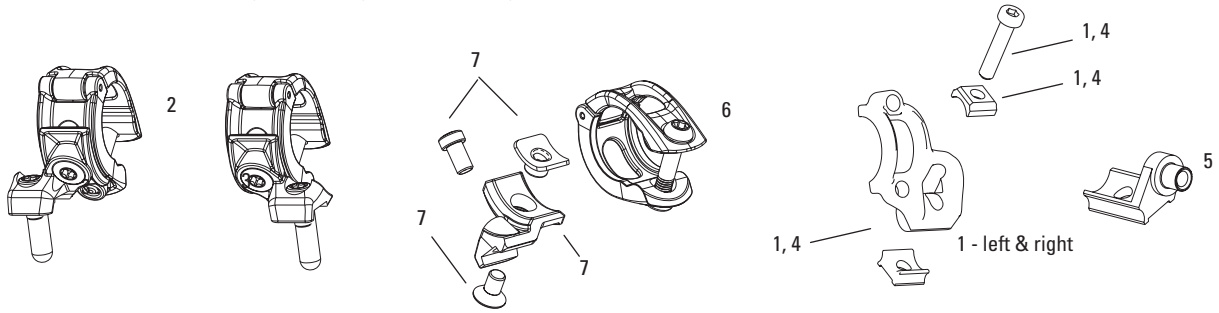

BRAKE PADS

00.5315.035.010	Disc Brake Pads Metal Scintered/Steel- Elixir/DB (1 set)
00.5315.035.020	Disc Brake Pads Organic/Alum- Elixir/DB (1 set)
00.5315.035.030	Disc Brake Pads Organic/Steel- Elixir/DB (1 set)
00.5318.003.003	Disc Brake Pads Organic/Alum, (1 set) - Trail/Guide
00.5318.003.004	Disc Brake Pads Organic/Steel, (1 set) - Trail/Guide
00.5318.003.005	Disc Brake Pads Sintered/Steel, (1 set) - Trail/Guide

HYDRAULIC LINES & FITTINGS

00.5016.168.010	Hydraulic Line Kit - Code, Code R, Elixir 3, Elixir 1, Juicy3, DB 3/1, 2000mm, Black, Qty 1
00.5016.168.020	Hydraulic Line Kit - Code, Code R, Elixir 3, Elixir 1, Juicy3, DB 3/1, 2000mm, White, Qty 1
00.5016.168.030	Hydraulic Line Kit - XX, Juicy Ultimate, Juicy 7, Juicy 5, 2000mm, Aluminum Banjo, Black, Qty 1
00.5016.168.040	Hydraulic Line Kit - XX, Juicy Ultimate, Juicy 7, Juicy 5, 2000mm, Aluminum Banjo, White, Qty 1
00.5016.168.050	Hydraulic Line Kit - Elixir 5, Elixir 7, Elixir 9, Elixir R,Elixir CR, Elixir X0, Elixir CR Mag, 2000mm, Stainless, Black, Qty 1
00.5016.168.060	Hydraulic Line Kit - Elixir 5, Elixir 7, Elixir 9, Elixir R,Elixir CR, Elixir X0, Elixir CR Mag, 2000mm, Stainless, White, Qty 1
11.5309.765.000	Hydraulic Disc Brake Hose Fitting Kit, Qty 1 (threaded hose barb, comp fitting, comp nut)
11.5311.555.000	Hydraulic Disc Brake Compression Hose Fitting, Qty 10
11.5311.556.000	Hydraulic Disc Brake Hose Barb, Threaded, Qty 10
11.5309.766.000	Hydraulic Disc Brake Compression Hose Nut, Qty 5
00.5016.168.130	Hydraulic Line Kit - GUIDE R/RS/RSC, DB5, 2000mm, Stainless, Black, Qty 1
00.5016.168.140	Hydraulic Line Kit - GUIDE R/RS/RSC, DB5, 2000mm, 2000mm, Stainless, White, Qty 1

BLEED KITS / TOOLS / BRAKE FLUID / GREASE

BLEED KITS, TOOLS, GREASE AND DOT FLUID (for use refer to manuals at sram.com/service)

Part Number	Description
00.5315.017.000	Avid Disc Brake Bleed Kit (DOT 5.1)
00.5315.025.010	Avid Professional Bleed Kit (DOT 5.1)
00.5315.033.010	Avid Bleed Kit Standard (DOT fluid not included)
00.5315.033.020	Avid Professional Bleed Kit (DOT fluid not included)
11.5315.053.010	O-ring Kit - Pro Bleed Syringe - Fitting O-ring and CouplingO-ring - Qty 2 each
11.5315.053.020	O-ring Kit - Pro Bleed Syringe - Fitting O-ring and CouplingO-ring - Qty 10 each
11.5315.053.030	O-ring Kit - Pro Bleed Syringe - Fitting O-ring and CouplingO-ring - Qty 20 each
00.5015.366.000	AVID Hydraulic Hose Cutter Tool
00.5315.028.010	Hydraulic Hose Cutter Tool, Hand-Held - Avid
00.5315.028.020	Hydraulic Hose Barb Driver Tool, Hand-Held - Avid (works with threaded and barbed)
11.5012.874.000	Avid 5.1 DOT Hydraulic Brake Fluid 4oz
11.5315.045.000	Avid DOT Assembly Grease 1oz
11.5364.102.000	Rotor Torx Wrench (T25, T10)
11.5378.801.000	Bleed Kit Hose Clamp Quantity 10
11.5015.014.030	Bleed Block Elixir/DB
11.5015.014.050	Bleed Block Guide/Trail
11.5315.046.020	Pad Spreader Tool - Elixir/DB Caliper Qty 2
11.5315.046.040	Pad Spreader Tool - Guide/Trail/Code Caliper Qty 2

NOTES

COPYRIGHT
This publication includes trademarks and registered trademarks of SRAM LLC designated by the symbols ™ and ®, respectively.

Copyright © 2014 SRAM LLC

www.sram.com

world headquarters
SRAM LLC
1333 n. kingsbury st., 4th fl
chicago, il 60642
phone +1-312-664-8800
fax +1-312-664-8826

european headquarters
SRAM europe
paasbosweg 14-16
3862ZS nijkerk
the netherlands
phone +31-33-450-6060
fax +31-33-457-0200

asian headquarters
SRAM taiwan
no. 1598-8 chung shan rd
shen kang hsiang, taichung
county road 49 taiwan r.o.c.
phone +886-4-2564-3678
fax +886-4-2561-3686