SRAM

2020

ROCKSHOX

SRAM® ORIGINAL PARTS

CAUTION:

The SRAM Warranty policy does not cover damages caused by the use of non-SRAM parts.

Use only SRAM parts with SRAM components.

Installation of parts and accessories not originally intended could result in less than optimal performance and/or injury.

For in-depth service information on SRAM products, refer to our website at www.sram.com/service. Contact your local SRAM distributor or dealer for ordering information.

Information contained in this publication is subject to change at any time without prior notice. Your product's appearance may vary from the diagrams contained in this catalog.

Copyright© 2020 SRAM LLC
Information may be enhanced
without prior notice.

Rev J, Released Sept 2020

TABLE OF CONTENTS

SEAT POSTS

5-6 Reverb™ AXS™
7-17 Reverb™

SUSPENSION FORKS

18-19 Paragon™
20-21 XC28/DART
22-25 XC30

26-29 30 Silver
30-31 30 Gold

32-33 Judy TK B1
34-35 Judy™ Silver
36-37 Judy™ Gold
38-39 XC32

40-43 Recon
44-51 Recon Silver
52-57 Recon Gold

58-59 Sektor™ RL
60-63 Sektor™ Silver
64-65 Sektor™ Gold
66-67 35 Gold
68-69 35 Silver
70-71 Bluto™

72-73 Reba 26
74-82 Reba®

83-84 SID® 35mm
85-86 SID® SL 32mm
87-91 SID® 32mm/RLC/XX/RL
92-94 SID® B
95-96 SID® A
97-100 RS-1™
101-102 Revelation™ 35mm
103-105 Revelation™ 32mm

106-107 Pike® Select/Select+/Ultimate
108-109 Pike® RCT3/RCT/RC
110-112 Pike® A1-A3
113-114 Pike® Boost
115-116 Pike® 29+ RCT3/RC
117-118 Pike® DJ

SUSPENSION FORKS

119-120 Domain™
121-122 Domain™ Dual Crown
123-124 Yari™

125-126 Lyrik™ Select/Select+/Ultimate
127-129 Lyrik™ RCT3/RC/RC2
130-131 Lyrik™A1-A2
132-133 Argyle™
134-135 ZEB A1
136-137 BoXXer® Select/Ultimate
138-139 BoXXer® 35mm C1
140-141 BoXXer® 35mm B1-B2
142-143 BoXXer® 35mm A1-A2

REAR SUSPENSION

144-147 Monarch XX™
148-156 Monarch™
157-162 Monarch Plus™
163-164 Kage™

165-169 Vivid™ Coil
170-174 Vivid™ Air
175-176 Mounting Hardware 1/2" x 1/2"

177-178 SidLuxe™

179-180 Deluxe™
181-182 Deluxe™ Re:Aktiv
183-184 Deluxe™ Re:Aktiv Thrushaft

185-186 Super Deluxe Thrushaft C1
187-188 Super Deluxe™
189-190 Super Deluxe™ Coil

MISCELLANEOUS

191 Metric Hardware
192-193 Maxle™
194 Decals
195 Fenders
196 OneLoc™ /PushLoc™/TwistLoc/PopLoc
197-199 XLoc™
200 Bulk Spares
201-202 Service Kits
203 Upgrade Kits
204 Tools / Lubricants
205-208 Travel Change Guide
209-211 Damper Upgrade Charts
212-214 Spring Upgrade Charts
215-216 Air Can Upgrade Charts

Notes:
Rider's Right / Drive Side = R
Rider's Left / Non-Drive Side = L

ns = not shown

Year denotes model year

Determining date from serial number:
25T3XXXXXXX -
'25' is the week of the year in which the product was made
'T' is an abbreviation for factory location
'3' is the last digit of the year in which it was made (2013 in this case)

For fork model identification via serial number please refer to online guide: https://trailhead.rockshox.com/en/
or download the RockShox Trailhead App from the iTunes Store.

Refer to the www.sram.com/service for service instructions, oil volumes and torque values.

REVERB AXS A1 (2020-2021)

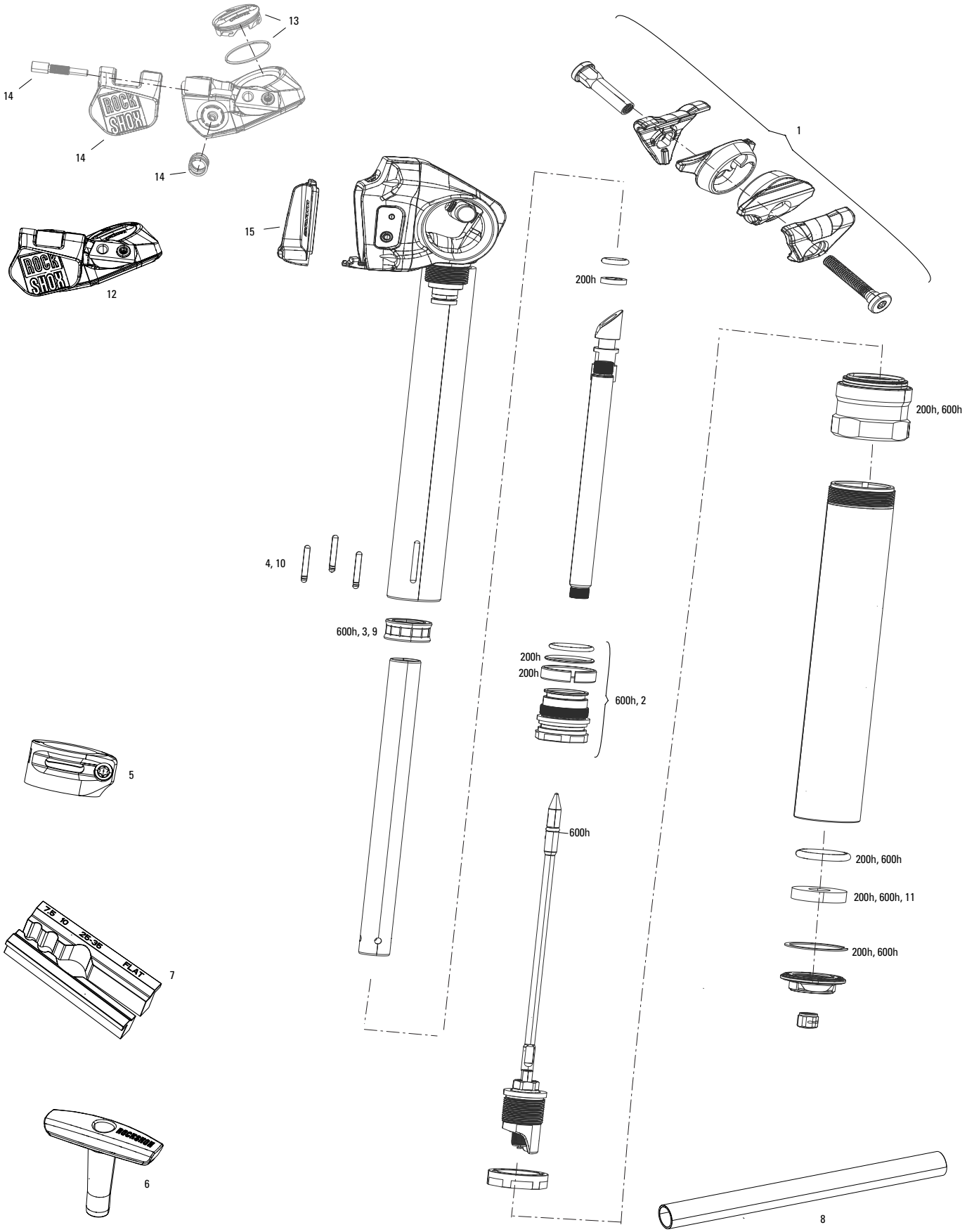

Note:
1. Reverb AXS uses Serene Fluid

REVERB AXS A1 (2020-2021)

200h	11.6818.051.000	SEATPOST SERVICE KIT - 200 HOUR/1 YEAR SERVICE (INCLUDES FOAM RING, TOPCAP ASSEMBLY, INNER SEALHEAD BUSHING, & O-RINGS) - REVERB AXS
600h	11.6818.051.001	SEATPOST SERVICE KIT - 600 HOUR/3 YEAR SERVICE (INCLUDES IFP, SEALHEAD ASSEMBLY, AND TOPCAP ASSEMBLY; REQUIRES OIL HEIGHT TOOL & IFP HEIGHT TOOL) REVERB AXS
	SPARES	
1	11.6818.054.000	SEATPOST POST CLAMP KIT - (INCLUDES CLAMP, NUTS & BOLTS) - REVERB AXS A1 (2020)
2	11.6818.033.000	SEATPOST INNER SEALHEAD - (CONTAINS SEALHEAD WITH BUSHINGS, O-RINGS, WIPER SEAL, RETAINING RING) - REVERB STEALTH B1(2017), REVERB AXS (2020+)
3	11.6818.053.000	SEATPOST IFP - GREY (INTERNAL FLOATING PISTON (QTY 1) - REVERB/REVERB STEALTH A1-C1, REVERB AXS A1
4	11.6818.037.000	SEATPOST BRASS KEYS - SIZE 0 (QTY 3) - REVERB/REVERB STEALTH A1- B1, REVERB AXS (2020+)
4	11.6818.037.001	SEATPOST BRASS KEYS - SIZE 3 (QTY 3) - REVERB/REVERB STEALTH A1- B1, REVERB AXS (2020+)
4	11.6818.037.002	SEATPOST BRASS KEYS - SIZE 4 (QTY 3) - REVERB/REVERB STEALTH A1- B1, REVERB AXS (2020+)
4	11.6818.037.003	SEATPOST BRASS KEYS - SIZE 5 (QTY 3) - REVERB/REVERB STEALTH A1- B1, REVERB AXS (2020+)
4	11.6818.037.004	SEATPOST BRASS KEYS - SIZE 6 (QTY 3) - REVERB/REVERB STEALTH A1- B1, REVERB AXS (2020+)
5	00.6818.006.000	REVERB ENDURO HEIGHT COLLAR SILVER
	TOOLS/GREASE/FLUIDS	
ns	00.4318.008.002	GREASE ROCKSHOX DYNAMIC SEAL GREASE (PTFE) 1OZ - RECOMMENDED FOR SERVICING REAR SHOCKS & FORKS
ns	00.4318.008.004	GREASE ROCKSHOX DYNAMIC SEAL GREASE 500ML - RECOMMENDED FOR SERVICING REAR SHOCKS & FORKS
ns	11.4115.094.050	MAXIMA SEAT POST FLUID SERENE, 16 OZ BOTTLE - REVERB (FOR USE IN SERVICING REVERB SEAT POST ONLY, NOT FOR USE IN REMOTE)
ns	00.4315.023.010	HIGH-PRESSURE FORK/SHOCK PUMP (300 PSI MAX) ROCKSHOX
ns	00.4315.022.010	REAR SHOCK SCHRADER VALVE REMOVAL TOOL ROCKSHOX
6	00.6818.044.000	SEATPOST VENT VALVE TOOL - REVERB AXS/REVERB C1
7	00.6818.045.000	SEATPOST VICE BLOCKS - 7.5MM,10MM, 25-35MM (USED FOR REVERB SERVICE) - REVERB AXS/REVERB A1-B1/REVERB STEALTH A2-C1
8	00.6818.043.000	SEATPOST IFP HEIGHT TOOL (210MM LENGTH) - REVERB AXS/REVERB A1-B1/REVERB STEALTH A2-C1
	TACKLEBOX AND BULK SPARES	
9	11.6818.053.001	SEATPOST IFP - GREY (INTERNAL FLOATING PISTON (QTY 10) - REVERB/REVERB STEALTH A1-C1, REVERB AXS A1
10	11.6818.035.000	SEATPOST BRASS KEYS - SIZE 0 (QTY 12) - REVERB/REVERB STEALTH A1- B1, REVERB AXS (2020+)
10	11.6818.035.001	SEATPOST BRASS KEYS - SIZE 3 (QTY 12) - REVERB/REVERB STEALTH A1- B1, REVERB AXS (2020+)
10	11.6818.035.002	SEATPOST BRASS KEYS - SIZE 4 (QTY 12) - REVERB/REVERB STEALTH A1- B1, REVERB AXS (2020+)
10	11.6818.035.003	SEATPOST BRASS KEYS - SIZE 5 (QTY 12) - REVERB/REVERB STEALTH A1- B1, REVERB AXS (2020+)
10	11.6818.035.004	SEATPOST BRASS KEYS - SIZE 6 (QTY 12) - REVERB/REVERB STEALTH A1- B1, REVERB AXS (2020+)
11	11.6818.035.005	SEATPOST FOAM RING - (QTY 10) - REVERB/REVERB STEALTH A1- B1, REVERB AXS (2020+)
	REMOTE	
12	00.3018.254.000	EC AXS ROCKSHOX LEFT HAND 1 BUTTON CONTROLLER(INCLUDES DISCRETE CLAMP) - REVERB AXS A1+ (2020+)
13	11.7018.076.001	ELECTRONIC CONTROLLER BATTERY HATCH AND O-RING XX1, X01 EAGLE AXS AND REVERB AXS
ns	11.7018.076.002	ELECTRONIC CONTROLLER DISCRETE CLAMP EAGLE / REVERB AXS (INCLUDING 2 BOLTS)
ns	00.3018.102.000	SRAM ETAP/AXS BATTERY QTY 1
ns	00.3018.117.000	SRAM ETAP/AXS BATTERY CHARGER AND CORD
14	11.6818.052.000	SEATPOST LEVER KIT- ROCKSHOX LEFT, SINGLE (INCLUDES SPRING AND PIN) REVERB AXS
15	11.7618.008.000	BATTERY BLOCK FOR ETAP/AXS FRONT & REAR DERAILLEUR AND EAGLE AXS RD, REVERB AXS QTY 1

REVERB STEALTH C1 (2020-2021)

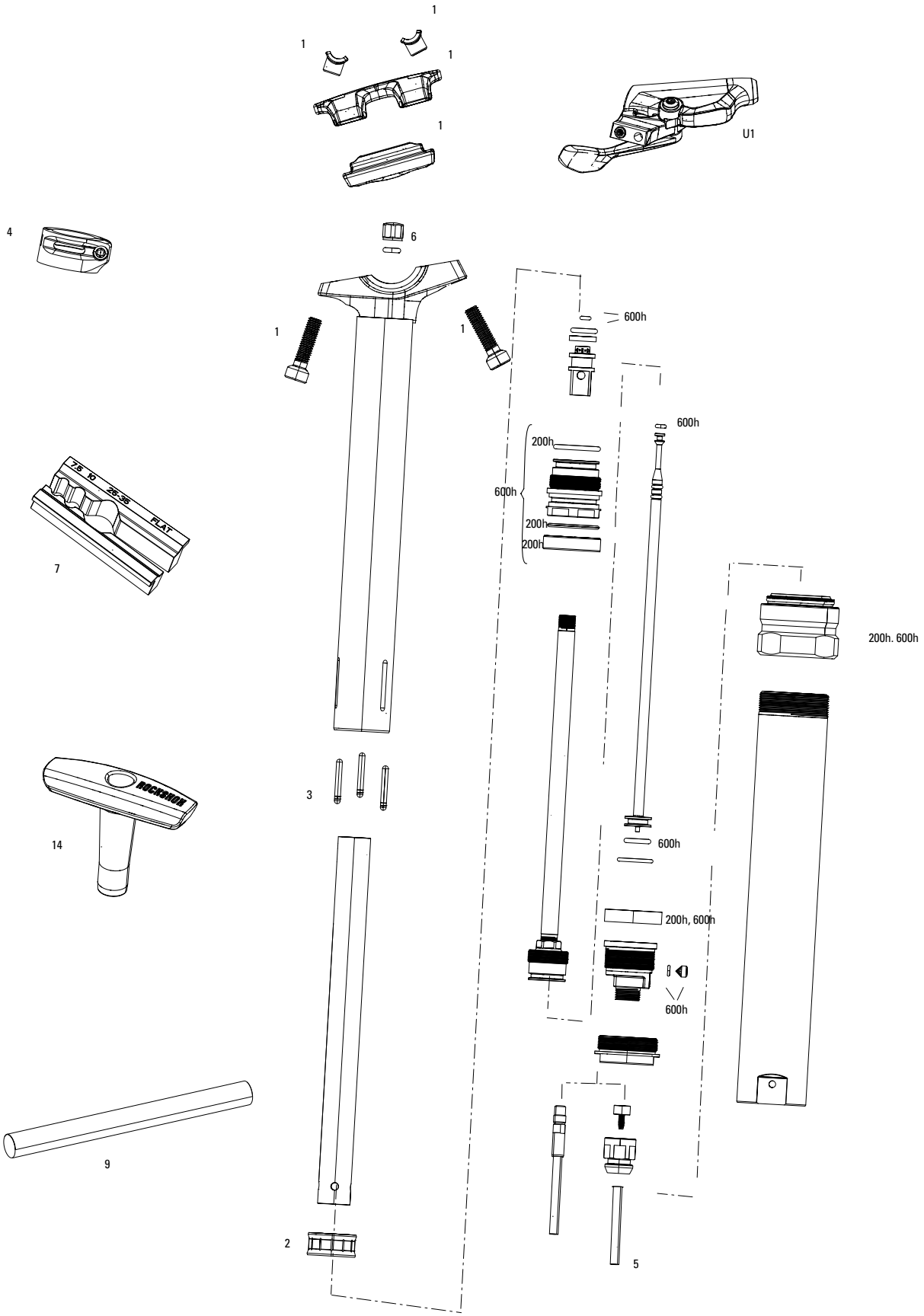

1. Discard bar, o-ring and sleeve when using 11.6815.025.030 seatpost hydraulic hose for Reverb Stealth C1 post
2. Seatpost uses Serene Fluid
3. Remote uses Reverb Fluid

REVERB STEALTH C1 (2020-2021)

	UPGRADES	
U1	00.6818.029.000	REMOTE UPGRADE KIT - LEFT/BELOW (INCLUDES REMOTE, BLEEDING EDGE FITTING, DISCRETE CLAMP, MMX CLAMP) - REVERB A2-C1 (2013+)
	SERVICE	
200h	11.6818.051.002	SEATPOST SERVICE KIT - 200 HOUR/1 YEAR SERVICE (INCLUDES FOAM RING, COLLAR, INNER SEALHEAD BUSHING, & O-RING) - REVERB STEALTH C1
600h	11.6818.051.003	SEATPOST SERVICE KIT - 600 HOUR/3 YEAR SERVICE (INCLUDES IFP, SEALHEAD ASSEMBLY, AND COLLAR ASSEMBLY; REQUIRES OIL HEIGHT TOOL & IFP HEIGHT TOOL) REVERB STEALTH C1
	SPARES	
1	11.6818.054.001	SEATPOST POST CLAMP KIT - (INCLUDES CLAMP, NUTS & BOLTS) - REVERB STEALTH C1 (2020)
2	11.6818.053.000	SEATPOST IFP - GREY (INTERNAL FLOATING PISTON (QTY 1) - REVERB/REVERB STEALTH A1-C1, REVERB AXS A1
BULK	11.6818.053.001	SEATPOST IFP - GREY (INTERNAL FLOATING PISTON (QTY 10) - REVERB/REVERB STEALTH A1-C1, REVERB AXS A1
3	11.6818.037.000	SEATPOST BRASS KEYS - SIZE 0 (QTY 3) - REVERB/REVERB STEALTH A1- B1, REVERB AXS (2020+)
3	11.6818.037.001	SEATPOST BRASS KEYS - SIZE 3 (QTY 3) - REVERB/REVERB STEALTH A1- B1, REVERB AXS (2020+)
3	11.6818.037.002	SEATPOST BRASS KEYS - SIZE 4 (QTY 3) - REVERB/REVERB STEALTH A1- B1, REVERB AXS (2020+)
3	11.6818.037.003	SEATPOST BRASS KEYS - SIZE 5 (QTY 3) - REVERB/REVERB STEALTH A1- B1, REVERB AXS (2020+)
3	11.6818.037.004	SEATPOST BRASS KEYS - SIZE 6 (QTY 3) - REVERB/REVERB STEALTH A1- B1, REVERB AXS (2020+)
4	00.6818.006.000	REVERB ENDURO HEIGHT COLLAR SILVER
5	11.6815.025.030	SEATPOST HYDRAULIC HOSE - (2000MM) CONNECTAMAJIG KIT (USE ONLY WITH CONNECTAMAJIG POST) - REVERB A2+
	GREASE/FLUIDS	
ns	00.4318.008.002	GREASE ROCKSHOX DYNAMIC SEAL GREASE (PTFE) 1OZ - RECOMMENDED FOR SERVICING REAR SHOCKS & FORKS
ns	00.4318.008.004	GREASE ROCKSHOX DYNAMIC SEAL GREASE 500ML - RECOMMENDED FOR SERVICING REAR SHOCKS & FORKS
ns	11.4315.021.070	ROCKSHOX REVERB HYDRAULIC FLUID, 120ML BOTTLE - REVERB/SPRINT REMOTE
ns	11.4015.354.040	ROCKSHOX REVERB HYDRAULIC FLUID, 1 LITER BOTTLE - REVERB/SPRINT REMOTE
ns	11.4115.094.050	MAXIMA SEAT POST FLUID SERENE, 16 OZ BOTTLE - REVERB (FOR USE IN SERVICING REVERB SEAT POST ONLY, NOT FOR USE IN REMOTE)
	TOOLS	
ns	00.4318.007.001	ROCKSHOX STANDARD BLEED KIT (INCLUDES 2 SYRINGES/FITTINGS, REVERB HYDRAULIC FLUID, 120ML BOTTLE NEW)
ns	00.4315.023.010	HIGH-PRESSURE FORK/SHOCK PUMP (300 PSI MAX) ROCKSHOX
ns	00.4315.022.010	REAR SHOCK SCHRADER VALVE REMOVAL TOOL ROCKSHOX
7	00.6818.045.000	SEATPOST VICE BLOCKS - 7.5MM,10MM, 25-35MM (USED FOR REVERB SERVICE) - REVERB AXS/REVERB A1-B1/REVERB STEALTH A2-C1
9	00.6818.043.000	SEATPOST IFP HEIGHT TOOL (210MM LENGTH) - REVERB AXS/REVERB A1-B1/REVERB STEALTH A2-C1
14	00.6818.044.000	SEATPOST VENT VALVE TOOL - REVERB AXS/REVERB C1
	TACKLEBOX AND BULK SPARES	
BULK	11.6818.035.000	SEATPOST BRASS KEYS - SIZE 0 (QTY 12) - REVERB/REVERB STEALTH A1- B1, REVERB AXS (2020+)
BULK	11.6818.035.001	SEATPOST BRASS KEYS - SIZE 3 (QTY 12) - REVERB/REVERB STEALTH A1- B1, REVERB AXS (2020+)
BULK	11.6818.035.002	SEATPOST BRASS KEYS - SIZE 4 (QTY 12) - REVERB/REVERB STEALTH A1- B1, REVERB AXS (2020+)
BULK	11.6818.035.003	SEATPOST BRASS KEYS - SIZE 5 (QTY 12) - REVERB/REVERB STEALTH A1- B1, REVERB AXS (2020+)
BULK	11.6818.035.004	SEATPOST BRASS KEYS - SIZE 6 (QTY 12) - REVERB/REVERB STEALTH A1- B1, REVERB AXS (2020+)
BULK	11.6818.035.005	SEATPOST FOAM RING - (QTY 10) - REVERB/REVERB STEALTH A1- B1, REVERB AXS (2020+)
BULK	11.6818.055.000	SEATPOST BLEED SCREW - REVERB STEALTH & REVERB REMOTE (INCLUDES BLEED SCREWS & O-RINGS) (QTY 10) REVERB REMOTE A1-A2, REVERB STEALTH A1-C1 (2011-2020)

REVERB STEALTH B1 (2017-2019)

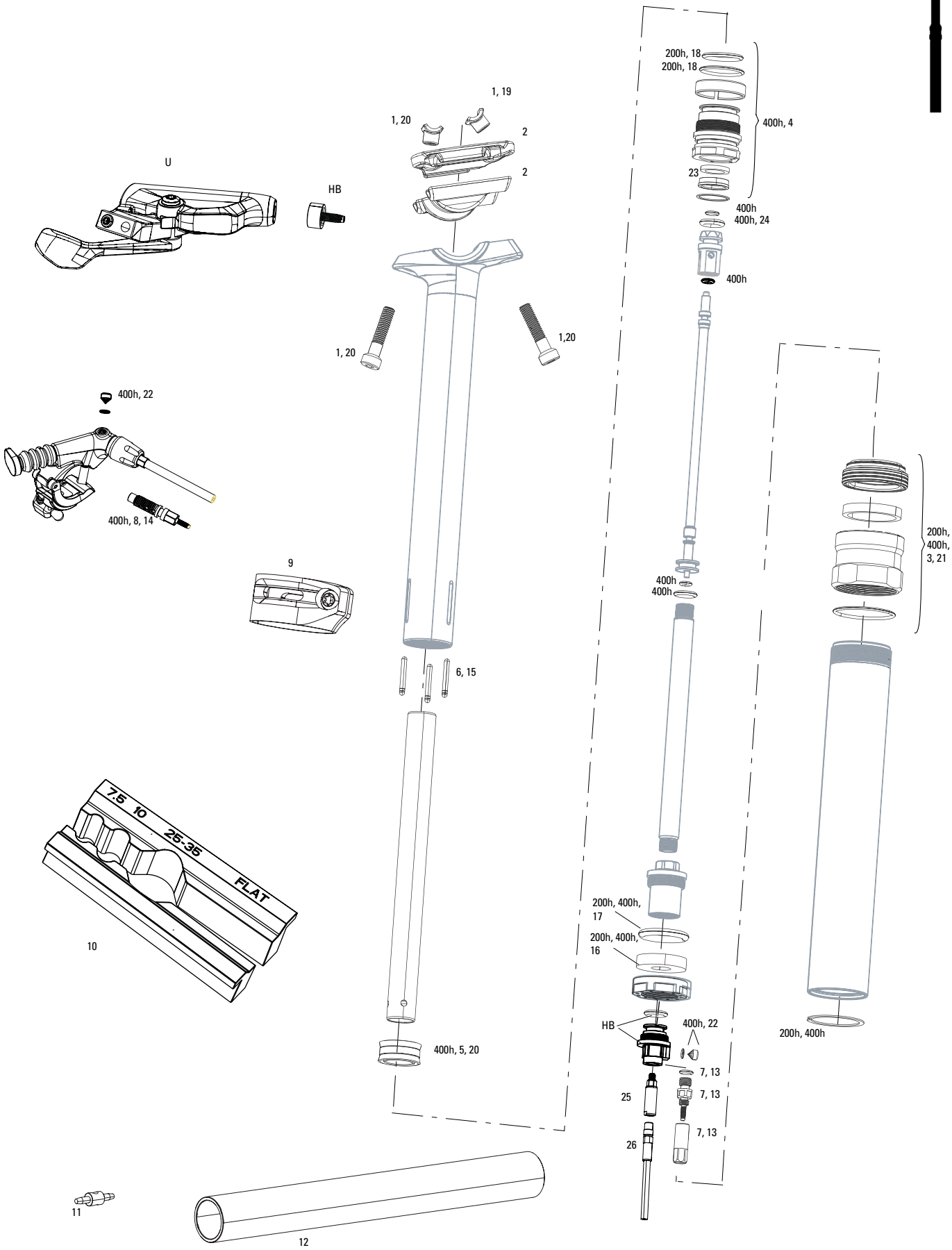

REVERB STEALTH B1 (2017-2019)

	UPGRADES	
U	00.6818.029.000	REMOTE UPGRADE KIT - LEFT/BELOW (INCLUDES REMOTE, BLEEDING EDGE FITTING, DISCRETE CLAMP, MMX CLAMP) - REVERB A2-C1 (2013+)
	SERVICE	
200h	11.6818.031.000	SEATPOST SERVICE KIT - 200 HOUR/1 YEAR SERVICE (INCLUDES FOAM RING, INNER SEALHEAD BUSHING & O-RINGS) - REVERB B1/REVERB STEALTH B1(2017-2019)
400h	11.6818.031.001	SEATPOST SERVICE KIT - 400 HOUR/2 YEAR SERVICE (INCLUDES NEW, UPGRADED IFP; REQUIRES POST BLEED TOOL, OIL HEIGHT TOOL & IFP HEIGHT TOOL) REVERB STEALTH B1 (2017-2019)
	SPARES	
1	11.6818.032.000	SEATPOST POST CLAMP KIT - (INCLUDES CLAMP NUTS & BOLTS ONLY) - REVERB/REVERB STEALTH A1-B1
2	11.6818.032.001	SEATPOST POST CLAMP KIT - (INCLUDES UPPER/LOWER CLAMP PLATES) - REVERB/REVERB STEALTH B1
3	11.6818.030.000	SEATPOST TOP CAP KIT - BLACK (INCLUDES DUST WIPER, TOP CAP & BUSHING) - REVERB/REVERB STEALTH A1-B1
4	11.6818.033.000	SEATPOST INNER SEALHEAD - (CONTAINS SEALHEAD WITH BUSHINGS, O-RINGS, WIPER SEAL, RETAINING RING) - REVERB STEALTH B1(2017), REVERB AXS (2020+)
5	11.6818.053.000	SEATPOST IFP - GREY (INTERNAL FLOATING PISTON (QTY 1) - REVERB/REVERB STEALTH A1-C1, REVERB AXS A1
6	11.6818.037.000	SEATPOST BRASS KEYS - SIZE 0 (QTY 3) - REVERB/REVERB STEALTH A1- B1, REVERB AXS (2020+)
6	11.6818.037.001	SEATPOST BRASS KEYS - SIZE 3 (QTY 3) - REVERB/REVERB STEALTH A1- B1, REVERB AXS (2020+)
6	11.6818.037.002	SEATPOST BRASS KEYS - SIZE 4 (QTY 3) - REVERB/REVERB STEALTH A1- B1, REVERB AXS (2020+)
6	11.6818.037.003	SEATPOST BRASS KEYS - SIZE 5 (QTY 3) - REVERB/REVERB STEALTH A1- B1, REVERB AXS (2020+)
6	11.6818.037.004	SEATPOST BRASS KEYS - SIZE 6 (QTY 3) - REVERB/REVERB STEALTH A1- B1, REVERB AXS (2020+)
7	11.6815.022.010	SEATPOST HOSE BARB - REVERB POST (QTY 1) - REVERB
HB	11.6818.049.000	SEATPOST HOSE BARB - SHORT (INCLUDES 1 SHORT BARB ASSY CREATING A SHORTER CONNECTION) - REVERB STEALTH B1
8	11.6815.022.030	REMOTE HOSE BARB - REVERB REMOTE (QTY 1) - REVERB
9	00.6818.006.000	REVERB ENDURO HEIGHT COLLAR SILVER
22	11.6818.055.000	SEATPOST BLEED SCREW - REVERB STEALTH & REVERB REMOTE (INCLUDES BLEED SCREWS & O-RINGS) (QTY 10) REVERB REMOTE A1-A2, REVERB STEALTH A1-C1 (2011-2020)
25	11.4318.005.000	REMOTE CONNECTAMAJIG COLLAR - BLACK - REVERB/XLOC FULL SPRINT
26	11.6815.025.030	SEATPOST HYDRAULIC HOSE - (2000MM) CONNECTAMAJIG KIT (USE ONLY WITH CONNECTAMAJIG POST) - REVERB A2+
	TOOLS/GREASE/FLUIDS	
ns	00.4318.008.000	GREASE SRAM BUTTER 20ML SYRINGE, FRICTION REDUCING GREASE BYSLICKOLEUM - DOUBLE TIME HUB PAWLS, FORKS & REVERB SERVICE
ns	00.4318.008.001	GREASE SRAM BUTTER 1OZ CONTAINER, FRICTION REDUCING GREASE BY SLICKOLEUM - DOUBLE TIME HUB PAWLS, FORKS & REVERB SERVICE
ns	00.4318.008.003	GREASE SRAM BUTTER 500ML CONTAINER, FRICTION REDUCING GREASEBY SLICKOLEUM - RECOMMENDED FOR SRAM DOUBLE TIME HUBS & WHEELS, ROCKSHOX FORKS AND REVERB SERVICE
ns	11.4315.021.070	ROCKSHOX REVERB HYDRAULIC FLUID, 120ML BOTTLE - REVERB/SPRINT REMOTE
ns	11.4015.354.040	ROCKSHOX REVERB HYDRAULIC FLUID, 1 LITER BOTTLE - REVERB/SPRINT REMOTE
ns	00.4318.007.001	ROCKSHOX STANDARD BLEED KIT (INCLUDES 2 SYRINGES/FITTINGS, REVERB HYDRAULIC FLUID, 120ML BOTTLE NEW)
ns	00.4315.023.010	HIGH-PRESSURE FORK/SHOCK PUMP (300 PSI MAX) ROCKSHOX
ns	00.4315.022.010	REAR SHOCK SCHRADER VALVE REMOVAL TOOL ROCKSHOX
ns	00.5315.027.000	CABLE HOUSING/HYDRAULIC LINE ROTATING HOOKS, SRAM QTY 4
10	00.6818.045.000	SEATPOST VICE BLOCKS - 7.5MM,10MM, 25-35MM (USED FOR REVERB SERVICE) - REVERB AXS/REVERB A1-B1/REVERB STEALTH A2-C1
11	00.6815.066.030	SEATPOST BARB CONNECTOR - REVERB STEALTH
12	00.6818.043.000	SEATPOST IFP HEIGHT TOOL (210MM LENGTH) - REVERB AXS/REVERB A1-B1/REVERB STEALTH A2-C1
ns	00.4318.012.008	OIL LEVEL ADJUSTER (FOR CHECKING AND ADJUSTING OIL LEVEL) -REVERB/MOTION CONTROL DAMPERS /TURNKEY DAMPERS
ns	11.4115.094.050	MAXIMA SEAT POST FLUID SERENE, 16 OZ BOTTLE - REVERB (FOR USE IN SERVICING REVERB SEAT POST ONLY, NOT FOR USE IN REMOTE)
	TACKLEBOX AND BULK SPARES	
ns	11.6818.036.000	SEATPOST TACKLE BOX - REVERB A2,B1
13	11.6815.022.020	SEATPOST HOSE BARB - REVERB POST (QTY 10) - REVERB
14	11.6815.022.040	REMOTE HOSE BARB - REVERB REMOTE (QTY 10) - REVERB
BULK	11.6818.035.000	SEATPOST BRASS KEYS - SIZE 0 (QTY 12) - REVERB/REVERB STEALTH A1- B1, REVERB AXS (2020+)
BULK	11.6818.035.001	SEATPOST BRASS KEYS - SIZE 3 (QTY 12) - REVERB/REVERB STEALTH A1- B1, REVERB AXS (2020+)
BULK	11.6818.035.002	SEATPOST BRASS KEYS - SIZE 4 (QTY 12) - REVERB/REVERB STEALTH A1- B1, REVERB AXS (2020+)
BULK	11.6818.035.003	SEATPOST BRASS KEYS - SIZE 5 (QTY 12) - REVERB/REVERB STEALTH A1- B1, REVERB AXS (2020+)
BULK	11.6818.035.004	SEATPOST BRASS KEYS - SIZE 6 (QTY 12) - REVERB/REVERB STEALTH A1- B1, REVERB AXS (2020+)
BULK	11.6818.035.005	SEATPOST FOAM RING - (QTY 10) - REVERB/REVERB STEALTH A1- B1, REVERB AXS (2020+)
17	11.6818.035.006	SEATPOST BOTTOM OUT O-RING - (QTY 10) - REVERB/REVERB STEALTH A2-B1
18	11.6818.035.007	SEATPOST INNER SEALHEAD BUSHING/O-RING - (INCLUDES 10 BUSHINGS & 10 O-RINGS) - REVERB/REVERB STEALTH B1
19	11.6818.035.008	SEATPOST POST CLAMP KIT - (INCLUDES CLAMP NUTS & BOLTS ONLY) (QTY 6) - REVERB/REVERB STEALTH A1-B1
20	11.6818.053.001	SEATPOST IFP - GREY (INTERNAL FLOATING PISTON (QTY 10) - REVERB/REVERB STEALTH A1-C1, REVERB AXS A1
21	11.6818.035.010	SEATPOST TOP CAP KIT - BLACK (INCLUDES DUST WIPER, TOP CAP & BUSHING) (QTY 5) - REVERB/REVERB STEALTH A1-B1
BULK	11.6818.055.000	SEATPOST BLEED SCREW - REVERB STEALTH & REVERB REMOTE (INCLUDES BLEED SCREWS & O-RINGS) (QTY 10) REVERB REMOTE A1-A2, REVERB STEALTH A1-C1 (2011-2020)
23	11.6818.035.015	SEATPOST INNER SEALHEAD U-CUP - (INCLUDES U-CUP & TOPOUT BUMPER) (QTY 10) - REVERB STEALTH A2 & B1
24	11.6818.035.018	SEATPOST MAIN PISTON SEAL - O-RING SEAL (QTY 10) - REVERB/REVERB STEALTH A2 & B1

REVERB B1 (2017-2019)

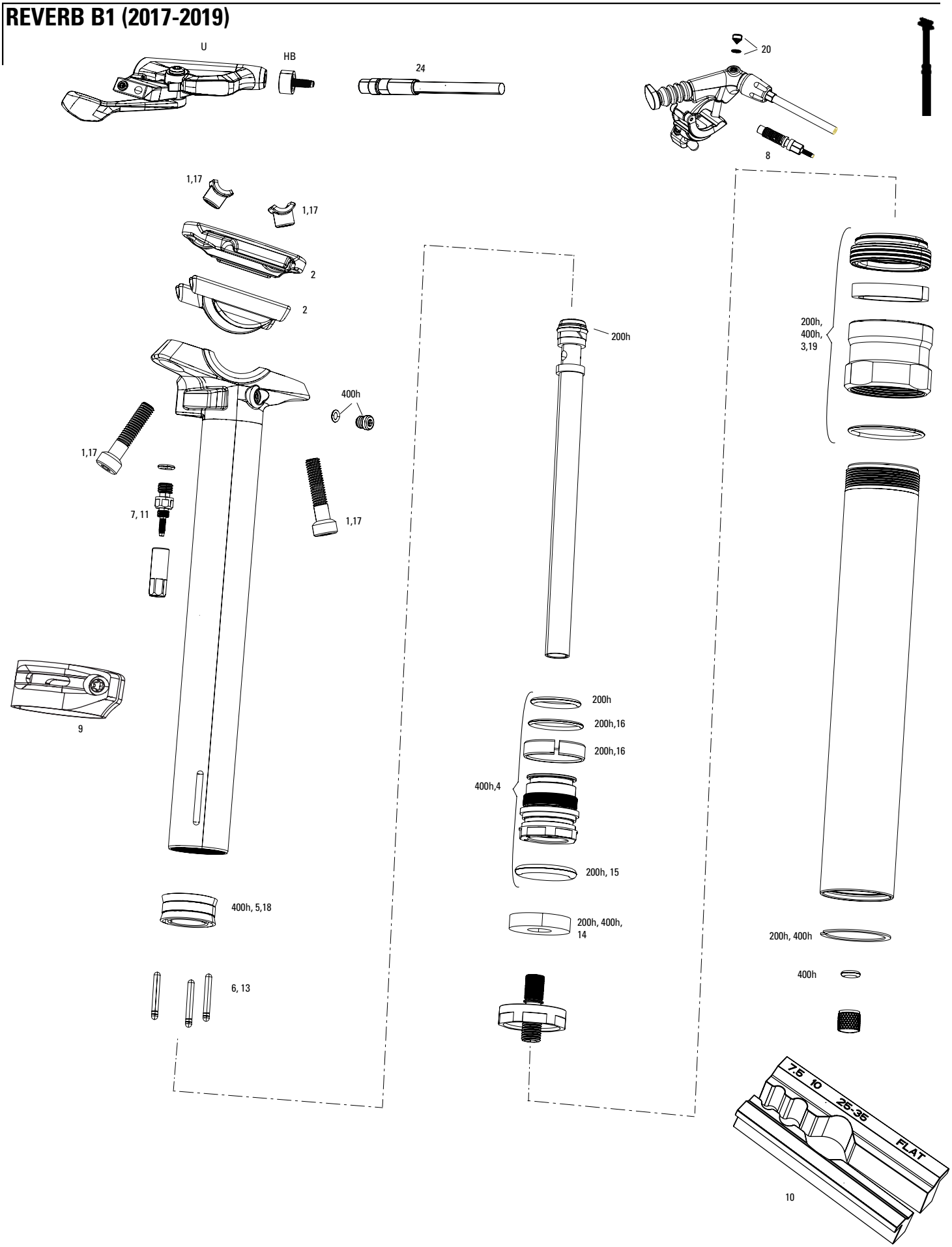

REVERB B1 (2017-2019)

	UPGRADES	
U	00.6818.029.000	REMOTE UPGRADE KIT - LEFT/BELOW (INCLUDES REMOTE, BLEEDING EDGE FITTING, DISCRETE CLAMP, MMX CLAMP) - REVERB A2-C1 (2013+)
	SERVICE	
200h	11.6818.031.000	SEATPOST SERVICE KIT - 200 HOUR/1 YEAR SERVICE (INCLUDES FOAM RING, INNER SEALHEAD BUSHING & O-RINGS) - REVERB B1/REVERB STEALTH B1(2017-2019)
400h	11.6818.031.002	SEATPOST SERVICE KIT - 400 HOUR/2 YEAR SERVICE (INCLUDES NEW, UPGRADED IFP; REQUIRES POST BLEED TOOL, OIL HEIGHT TOOL & IFP HEIGHT TOOL) REVERB B1(2017-2019)
	SPARES	
1	11.6818.032.000	SEATPOST POST CLAMP KIT - (INCLUDES CLAMP NUTS & BOLTS ONLY) - REVERB/REVERB STEALTH A1-B1
2	11.6818.032.001	SEATPOST POST CLAMP KIT - (INCLUDES UPPER/LOWER CLAMP PLATES) - REVERB/REVERB STEALTH B1
3	11.6818.030.000	SEATPOST TOP CAP KIT - BLACK (INCLUDES DUST WIPER, TOP CAP & BUSHING) - REVERB/REVERB STEALTH A1-B1
4	11.6818.033.001	SEATPOST INNER SEALHEAD - (INCLUDES SEALHEAD WITH BUSHINGS, O-RINGS, WIPER SEAL, RETAINING RING) - REVERB B1(2017)
5	11.6818.053.000	SEATPOST IFP - GREY (INTERNAL FLOATING PISTON (QTY 1) - REVERB/REVERB STEALTH A1-C1, REVERB AXS A1
6	11.6818.035.000	SEATPOST BRASS KEYS - SIZE 0 (QTY 12) - REVERB/REVERB STEALTH A1- B1, REVERB AXS (2020+)
6	11.6818.035.001	SEATPOST BRASS KEYS - SIZE 3 (QTY 12) - REVERB/REVERB STEALTH A1- B1, REVERB AXS (2020+)
6	11.6818.035.002	SEATPOST BRASS KEYS - SIZE 4 (QTY 12) - REVERB/REVERB STEALTH A1- B1, REVERB AXS (2020+)
6	11.6818.035.003	SEATPOST BRASS KEYS - SIZE 5 (QTY 12) - REVERB/REVERB STEALTH A1- B1, REVERB AXS (2020+)
6	11.6818.035.004	SEATPOST BRASS KEYS - SIZE 6 (QTY 12) - REVERB/REVERB STEALTH A1- B1, REVERB AXS (2020+)
7	11.6815.022.010	SEATPOST HOSE BARB - REVERB POST (QTY 1) - REVERB
8	11.6815.022.030	REMOTE HOSE BARB - REVERB REMOTE (QTY 1) - REVERB
9	00.6818.006.000	REVERB ENDURO HEIGHT COLLAR SILVER
HB	11.6818.049.000	SEATPOST HOSE BARB - SHORT (INCLUDES 1 SHORT BARB ASSY CREATING A SHORTER CONNECTION) - REVERB STEALTH B1
24	11.6815.025.010	SEATPOST HYDRAULIC HOSE - (2000MM) KIT (INCLUDES NEW HOSE, NEW STRAIN RELIEF, NEW BARB) - REVERB A1-B1
	GREASE/FLUIDS	
ns	00.4318.008.000	GREASE SRAM BUTTER 20ML SYRINGE, FRICTION REDUCING GREASE BYSLICKOLEUM - DOUBLE TIME HUB PAWLS, FORKS & REVERB SERVICE
ns	00.4318.008.001	GREASE SRAM BUTTER 1OZ CONTAINER, FRICTION REDUCING GREASE BY SLICKOLEUM - DOUBLE TIME HUB PAWLS, FORKS & REVERB SERVICE
ns	00.4318.008.003	GREASE SRAM BUTTER 500ML CONTAINER, FRICTION REDUCING GREASEBY SLICKOLEUM - RECOMMENDED FOR SRAM DOUBLE TIME HUBS & WHEELS, ROCKSHOX FORKS AND REVERB SERVICE
ns	11.4315.021.070	ROCKSHOX REVERB HYDRAULIC FLUID, 120ML BOTTLE - REVERB/SPRINT REMOTE
ns	11.4015.354.040	ROCKSHOX REVERB HYDRAULIC FLUID, 1 LITER BOTTLE - REVERB/SPRINT REMOTE
	TOOLS	
ns	00.4318.007.001	ROCKSHOX STANDARD BLEED KIT (INCLUDES 2 SYRINGES/FITTINGS, REVERB HYDRAULIC FLUID, 120ML BOTTLE NEW)
ns	00.4315.023.010	HIGH-PRESSURE FORK/SHOCK PUMP (300 PSI MAX) ROCKSHOX
ns	00.4315.022.010	REAR SHOCK SCHRADER VALVE REMOVAL TOOL ROCKSHOX
ns	00.5315.027.000	CABLE HOUSING/HYDRAULIC LINE ROTATING HOOKS, SRAM QTY 4
10	00.6818.045.000	SEATPOST VICE BLOCKS - 7.5MM,10MM, 25-35MM (USED FOR REVERB SERVICE) - REVERB AXS/REVERB A1-B1/REVERB STEALTH A2-C1
ns	00.6815.066.020	SEATPOST BLEED TOOL - REVERB
ns	00.6815.066.010	SEATPOST OIL HEIGHT TOOL - REVERB
ns	00.6818.043.000	SEATPOST IFP HEIGHT TOOL (210MM LENGTH) - REVERB AXS/REVERB A1-B1/REVERB STEALTH A2-C1
	TACKLEBOX AND BULK SPARES	
ns	11.6818.036.000	SEATPOST TACKLE BOX - REVERB A2,B1
11	11.6815.022.020	SEATPOST HOSE BARB - REVERB POST (QTY 10) - REVERB
12	11.6815.022.040	REMOTE HOSE BARB - REVERB REMOTE (QTY 10) - REVERB
BULK	11.6818.035.000	SEATPOST BRASS KEYS - SIZE 0 (QTY 12) - REVERB/REVERB STEALTH A1- B1, REVERB AXS (2020+)
BULK	11.6818.035.001	SEATPOST BRASS KEYS - SIZE 3 (QTY 12) - REVERB/REVERB STEALTH A1- B1, REVERB AXS (2020+)
BULK	11.6818.035.002	SEATPOST BRASS KEYS - SIZE 4 (QTY 12) - REVERB/REVERB STEALTH A1- B1, REVERB AXS (2020+)
BULK	11.6818.035.003	SEATPOST BRASS KEYS - SIZE 5 (QTY 12) - REVERB/REVERB STEALTH A1- B1, REVERB AXS (2020+)
BULK	11.6818.035.004	SEATPOST BRASS KEYS - SIZE 6 (QTY 12) - REVERB/REVERB STEALTH A1- B1, REVERB AXS (2020+)
BULK	11.6818.035.005	SEATPOST FOAM RING - (QTY 10) - REVERB/REVERB STEALTH A1- B1, REVERB AXS (2020+)
15	11.6818.035.006	SEATPOST BOTTOM OUT O-RING - (QTY 10) - REVERB/REVERB STEALTH A2-B1
16	11.6818.035.007	SEATPOST INNER SEALHEAD BUSHING/O-RING - (INCLUDES 10 BUSHINGS & 10 O-RINGS) - REVERB/REVERB STEALTH B1
17	11.6818.035.008	SEATPOST POST CLAMP KIT - (INCLUDES CLAMP NUTS & BOLTS ONLY) (QTY 6) - REVERB/REVERB STEALTH A1-B1
18	11.6818.053.001	SEATPOST IFP - GREY (INTERNAL FLOATING PISTON (QTY 10) - REVERB/REVERB STEALTH A1-C1, REVERB AXS A1
19	11.6818.035.010	SEATPOST TOP CAP KIT - BLACK (INCLUDES DUST WIPER, TOP CAP & BUSHING) (QTY 5) - REVERB/REVERB STEALTH A1-B1
20	11.6818.055.000	SEATPOST BLEED SCREW - REVERB STEALTH & REVERB REMOTE (INCLUDES BLEED SCREWS & O-RINGS) (QTY 10) REVERB REMOTE A1-A2, REVERB STEALTH A1-C1 (2011-2020)
23	11.6818.035.017	SEATPOST INNER SEALHEAD SEAL - INTERNAL O-RING (QTY 10) - REVERB B1

REVERB / REVERB STEALTH A1 - A2 (2011-2016)

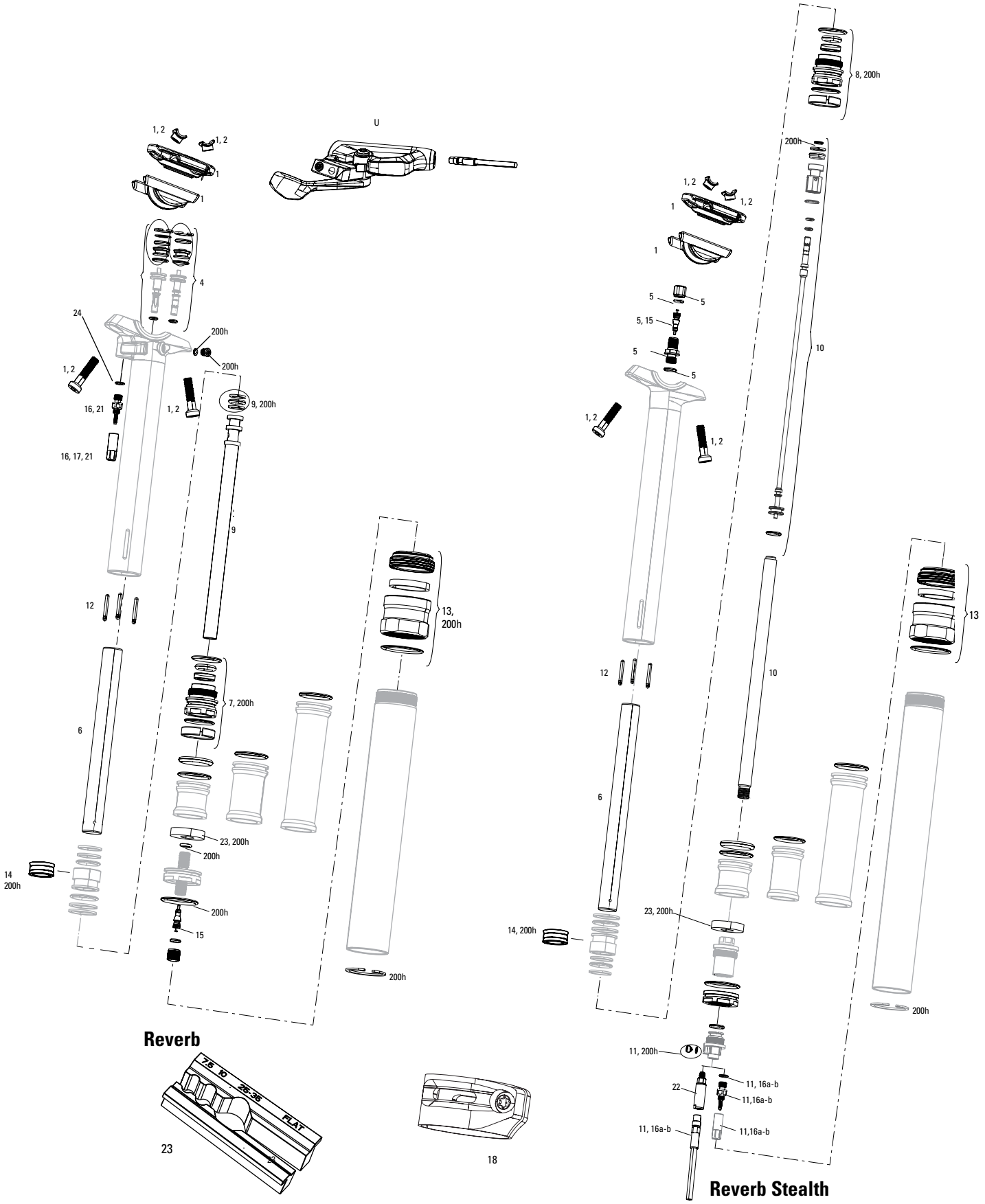

REVERB / REVERB STEALTH A1-A2 (2011-2016)

	UPGRADES	
U	00.6818.029.000	REMOTE UPGRADE KIT - LEFT/BELOW (INCLUDES REMOTE, BLEEDING EDGE FITTING, DISCRETE CLAMP, MMX CLAMP) - REVERB A2-C1 (2013+)
	SERVICE	
200h	11.6818.031.004	SEATPOST SERVICE KIT - 200 HOUR/1 YEAR SERVICE (INCLUDES NEW, UPGRADED IFP; REQUIRES OIL LEVEL ADJUSTER) - REVERB STEALTHA2 (2013-2016)
200h	11.6818.031.005	SEATPOST SERVICE KIT - 200 HOUR/1 YEAR SERVICE (INCLUDES NEW, UPGRADED IFP; REQUIRES POST BLEED TOOL, OIL HEIGHT TOOL &OIL LEVEL ADJUSTER) - REVERB A2 (2013-2016)
ns	00.4318.012.005	SEATPOST TOOL BLEED EDGE (WORKS WITH ROCKSHOX BLEED KITS) - REVERB 1X REMOTE
	SPARES	
1	11.6815.006.010	SEATPOST POST CLAMP KIT - (INCLUDES UPPER/LOWER CLAMP PLATES/CLAMP NUTS/CLAMP BOLTS) REVERB
2	11.6818.032.000	SEATPOST POST CLAMP KIT - (INCLUDES CLAMP NUTS & BOLTS ONLY) - REVERB/REVERB STEALTH A1-B1
2	11.6815.007.010	SEATPOST POST CLAMP KIT - (INCLUDES NUTS & BOLTS) - REVERB A1
4	11.6818.013.010	SEATPOST POPPET KIT - (USE WITH A2 UPPER ASSEMBLY & A2 REMOTE ONLY) - REVERB A2
5	11.6818.014.000	SEATPOST AIR VALVE KIT - REVERB STEALTH AIR VALVE ASSEMBLY
6	11.6818.016.030	SEATPOST IFP TUBE - 100MM (INCLUDES V3 IFP) - REVERB/REVERB STEALTH A1-A2
6	11.6818.016.040	SEATPOST IFP TUBE - 125MM (INCLUDES V3 IFP) - REVERB/REVERB STEALTH A1-A2
6	11.6818.016.050	SEATPOST IFP TUBE - 150MM (INCLUDES V3 IFP) - REVERB/REVERB STEALTH A1-A2
7	11.6818.017.000	SEATPOST INNER SEALHEAD - REVERB A1-A2
8	11.6818.017.020	SEATPOST INNER SEALHEAD - REVERB STEALTH A1-A2
9	11.6818.018.000	SEATPOST MAIN PISTON/SHAFT - 355X100MM/380X125MM - REVERB A1-A2
9	11.6818.018.010	SEATPOST MAIN PISTON/SHAFT - 420X100MM - REVERB A1-A2
9	11.6818.018.020	SEATPOST MAIN PISTON/SHAFT - 420X125MM - REVERB A1-A2
10	11.6818.019.030	SEATPOST MAIN PISTON/POPPET KIT - 355X100MM/380X125MM(USE WITH A2 UPPER ASSEMBLY & A2 REMOTE ONLY) - REVERB STEALTH A2
10	11.6818.019.050	SEATPOST MAIN PISTON/POPPET KIT - 420X125MM (USE WITHA2 UPPER ASSEMBLY & A2 REMOTE ONLY) - REVERB STEALTH A2
10	11.6818.019.060	SEATPOST MAIN PISTON/POPPET KIT - 430X150MM - REVERB STEALTH A2
11	11.6815.030.010	SEATPOST LOWER HOSE BARB ASSEMBLY KIT - REVERB STEALTH A1-A2 (2011-2016)
12	11.6818.037.000	SEATPOST BRASS KEYS - SIZE 0 (QTY 3) - REVERB/REVERB STEALTH A1- B1, REVERB AXS (2020+)
12	11.6818.037.001	SEATPOST BRASS KEYS - SIZE 3 (QTY 3) - REVERB/REVERB STEALTH A1- B1, REVERB AXS (2020+)
12	11.6818.037.002	SEATPOST BRASS KEYS - SIZE 4 (QTY 3) - REVERB/REVERB STEALTH A1- B1, REVERB AXS (2020+)
12	11.6818.037.003	SEATPOST BRASS KEYS - SIZE 5 (QTY 3) - REVERB/REVERB STEALTH A1- B1, REVERB AXS (2020+)
12	11.6818.037.004	SEATPOST BRASS KEYS - SIZE 6 (QTY 3) - REVERB/REVERB STEALTH A1- B1, REVERB AXS (2020+)
13	11.6818.030.000	SEATPOST TOP CAP KIT - BLACK (INCLUDES DUST WIPER, TOP CAP & BUSHING) - REVERB/REVERB STEALTH A1-B1
14	11.6818.053.000	SEATPOST IFP - GREY (INTERNAL FLOATING PISTON (QTY 1) - REVERB/REVERB STEALTH A1-C1, REVERB AXS A1
15	11.4308.327.002	AIR VALVE KIT - SCHRADER CORE (QTY 2) - FORKS/SHOCKS/REVERB
16a	11.6815.025.010	SEATPOST HYDRAULIC HOSE - (2000MM) KIT (INCLUDES NEW HOSE, NEW STRAIN RELIEF, NEW BARB) - REVERB A1-B1
16b	11.6815.025.030	SEATPOST HYDRAULIC HOSE - (2000MM) CONNECTAMAJIG KIT (USE ONLY WITH CONNECTAMAJIG POST) - REVERB A2+
17	11.6815.028.010	SEATPOST HYDRAULIC HOSE STRAIN RELIEF - REVERB A1-A2
18	00.6818.006.000	REVERB ENDURO HEIGHT COLLAR SILVER
19	11.6815.022.010	SEATPOST HOSE BARB - REVERB POST (QTY 1) - REVERB
19	11.6815.022.020	SEATPOST HOSE BARB - REVERB POST (QTY 10) - REVERB
20	11.6815.022.030	REMOTE HOSE BARB - REVERB REMOTE (QTY 1) - REVERB
20	11.6815.022.040	REMOTE HOSE BARB - REVERB REMOTE (QTY 10) - REVERB
	TOOLS/GREASE/FLUIDS/BULK	
BULK	11.6818.035.000	SEATPOST BRASS KEYS - SIZE 0 (QTY 12) - REVERB/REVERB STEALTH A1- B1, REVERB AXS (2020+)
BULK	11.6818.035.001	SEATPOST BRASS KEYS - SIZE 3 (QTY 12) - REVERB/REVERB STEALTH A1- B1, REVERB AXS (2020+)
BULK	11.6818.035.002	SEATPOST BRASS KEYS - SIZE 4 (QTY 12) - REVERB/REVERB STEALTH A1- B1, REVERB AXS (2020+)
BULK	11.6818.035.003	SEATPOST BRASS KEYS - SIZE 5 (QTY 12) - REVERB/REVERB STEALTH A1- B1, REVERB AXS (2020+)
BULK	11.6818.035.004	SEATPOST BRASS KEYS - SIZE 6 (QTY 12) - REVERB/REVERB STEALTH A1- B1, REVERB AXS (2020+)
BULK	11.6818.035.005	SEATPOST FOAM RING - (QTY 10) - REVERB/REVERB STEALTH A1- B1, REVERB AXS (2020+)
BULK	11.6818.055.000	SEATPOST BLEED SCREW - REVERB STEALTH & REVERB REMOTE (INCLUDES BLEED SCREWS & O-RINGS) (QTY 10) REVERB REMOTE A1-A2, REVERB STEALTH A1-C1 (2011-2020)
BULK	11.6818.053.001	SEATPOST IFP - GREY (INTERNAL FLOATING PISTON (QTY 10) - REVERB/REVERB STEALTH A1-C1, REVERB AXS A1
ns	00.6815.066.010	SEATPOST OIL HEIGHT TOOL - REVERB
ns	00.6815.066.020	SEATPOST BLEED TOOL - REVERB
ns	00.6815.066.030	SEATPOST BARB CONNECTOR - REVERB STEALTH
ns	00.6818.043.000	SEATPOST IFP HEIGHT TOOL (210MM LENGTH) - REVERB AXS/REVERB A1-B1/REVERB STEALTH A2-C1
22	11.4318.005.000	REMOTE CONNECTAMAJIG COLLAR - BLACK - REVERB/XLOC FULL SPRINT
23	00.6818.045.000	SEATPOST VICE BLOCKS - 7.5MM,10MM, 25-35MM (USED FOR REVERB SERVICE) - REVERB AXS/REVERB A1-B1/REVERB STEALTH A2-C1
ns	00.4318.008.000	
ns	00.4318.008.001	GREASE SRAM BUTTER 1OZ CONTAINER, FRICTION REDUCING GREASE BY SLICKOLEUM - DOUBLE TIME HUB PAWLS, FORKS & REVERB SERVICE
ns	11.4315.021.070	ROCKSHOX REVERB HYDRAULIC FLUID, 120ML BOTTLE - REVERB/SPRINT REMOTE
ns	00.4318.007.001	ROCKSHOX STANDARD BLEED KIT (INCLUDES 2 SYRINGES/FITTINGS, REVERB HYDRAULIC FLUID, 120ML BOTTLE NEW)
ns	11.4115.094.050	MAXIMA SEAT POST FLUID SERENE, 16 OZ BOTTLE - REVERB (FOR USE IN SERVICING REVERB SEAT POST ONLY, NOT FOR USE IN REMOTE)
ns	00.4315.023.010	HIGH-PRESSURE FORK/SHOCK PUMP (300 PSI MAX) ROCKSHOX
ns	00.4315.022.010	REAR SHOCK SCHRADER VALVE REMOVAL TOOL ROCKSHOX
ns	00.5315.027.000	CABLE HOUSING/HYDRAULIC LINE ROTATING HOOKS, SRAM QTY 4

REVERB 1X REMOTE - A2-B1 (2013 -2021)

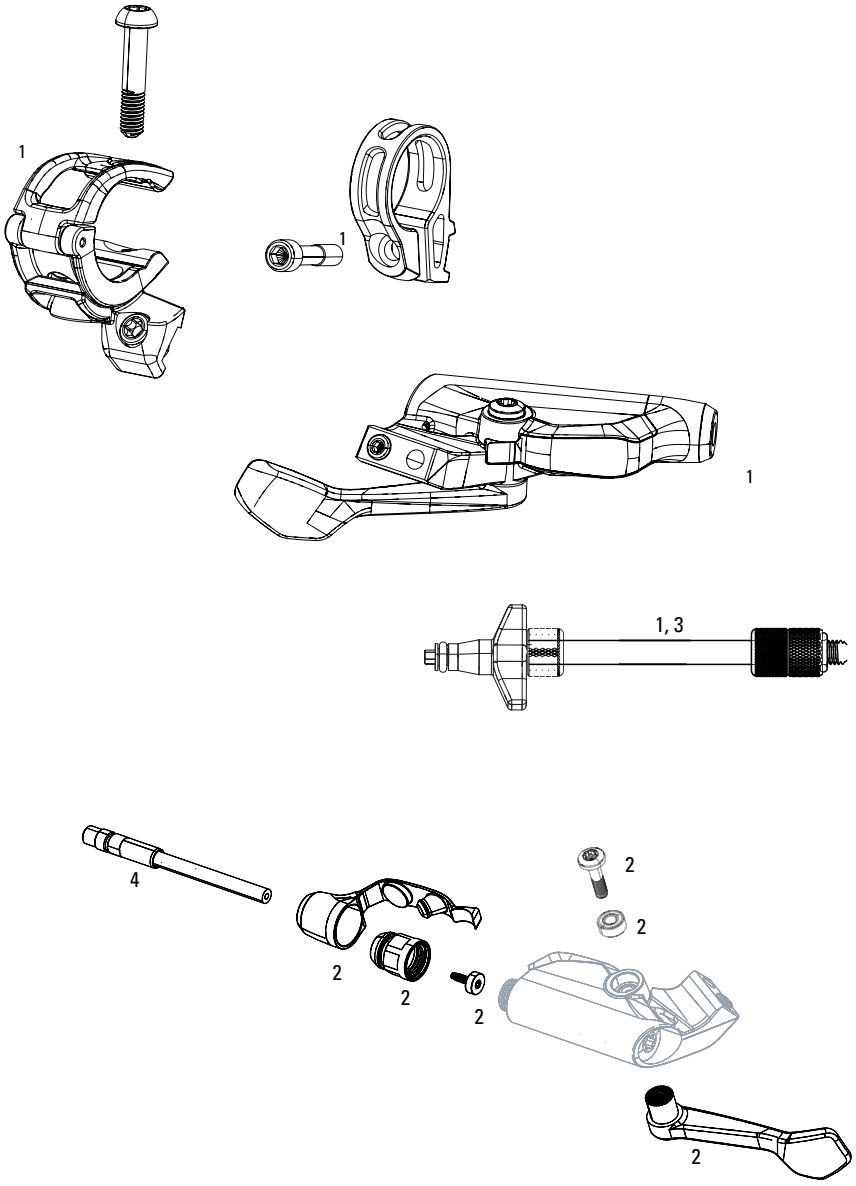

	UPGRADES	
1	00.6818.029.000	REMOTE UPGRADE KIT - LEFT/BELOW (INCLUDES REMOTE, BLEEDING EDGE FITTING, DISCRETE CLAMP, MMX CLAMP) - REVERB A2-C1 (2013+)
	SERVICE	
2	11.6818.048.000	REMOTE SERVICE KIT - (INCLUDES BOOT, PADDLE, & BARB) - REVERB 1X REMOTE B1
	SPARES	
3	00.4318.012.005	SEATPOST TOOL BLEED EDGE (WORKS WITH ROCKSHOX BLEED KITS) - REVERB 1X REMOTE
4	11.6815.025.030	SEATPOST HYDRAULIC HOSE - (2000MM) CONNECTAMAJIG KIT (USE ONLY WITH CONNECTAMAJIG POST) - REVERB A2+

REVERB/REVERB STEALTH REMOTE A1-A2 (2011-2016)

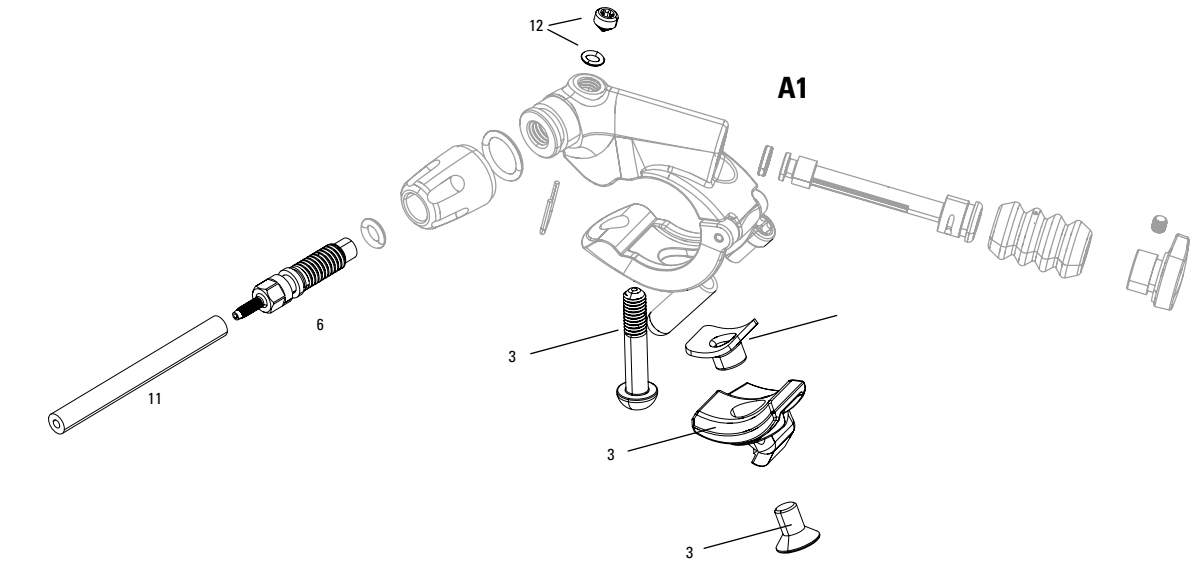

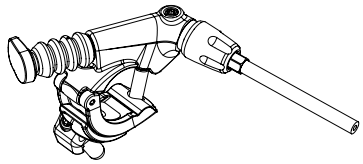

1 - fully assembled lever

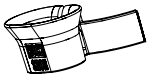

38

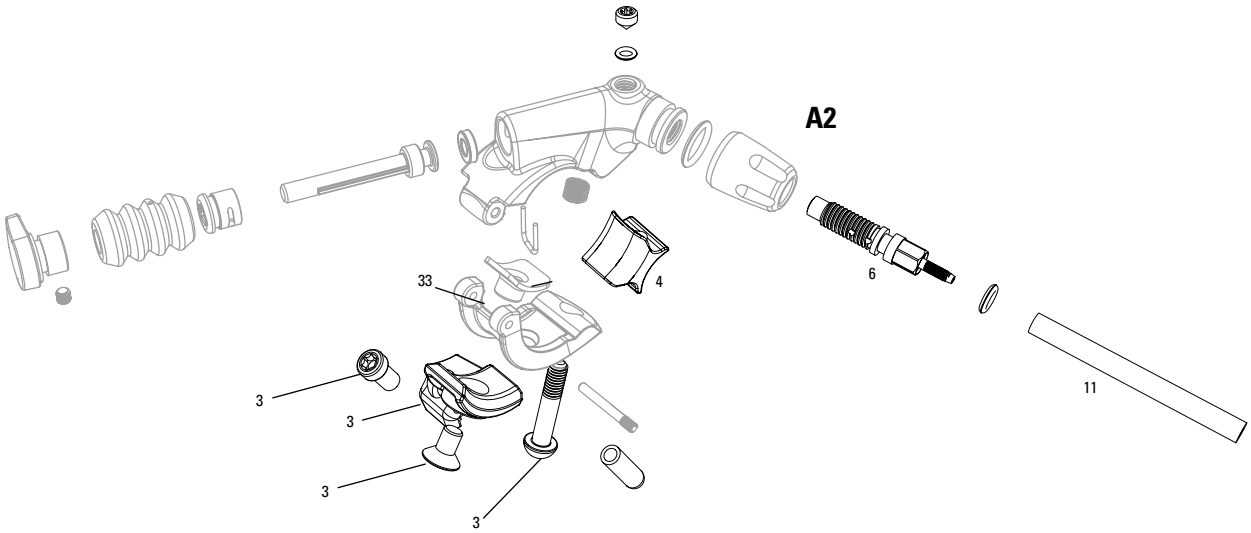

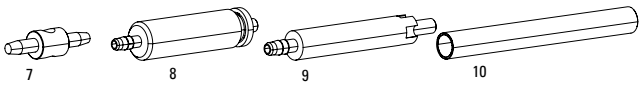

Note:
1. A1 - Remote silver adjuster knob - compatible with A1 Reverb only (2011-2013)
2. A2 - Remote black adjuster knob - compatible with A2 & B1 Reverb only (2013-2016)
3. A1 - specific parts not compatible with A2
4. As of MY16, there is a new IFP for Reverb and Reverb Stealth that does not use the two backup rings. Current full service kits include the new IFP, which is retrofittable into any Reverb or Reverb Stealth
5. If Reverb is sinking into travel or experiencing bypass, please use new IFP tube and inner seal head.

REVERB / REVERB STEALTH REMOTE A1-A2 (2011-2016)

REVERB / REVERB STEALTH REMOTE A1-A2 (2011-2016)

	REMOTE A1	
1	11.6815.026.010	REMOTE - REVERB (LEFT/MMX) (INCLUDES LEFT REMOTE LEVER, MMX CLAMP, NEW HOSE 1500MM, NEW HOSE BARB, NEW STRAIN RELIEF) - REVERB A1
1	11.6815.026.020	REMOTE - REVERB (RIGHT/MMX) (INCLUDES RIGHT REMOTE LEVER, MMX CLAMP, NEW HOSE 1500MM, NEW HOSE BARB, NEW STRAIN RELIEF) - REVERB A1
1	11.6815.026.030	REMOTE - REVERB (LEFT) (INCLUDES LEFT REMOTE LEVER, NEW HOSE 1500MM, NEW HOSE BARB, NEW STRAIN RELIEF) - REVERB A1
1	11.6815.026.040	REMOTE - REVERB (RIGHT) (INCLUDES RIGHT REMOTE LEVER, NEW HOSE 1500MM, NEW HOSE BARB, NEW STRAIN RELIEF) - REVERB A1
	REMOTE A2	
2	11.6815.026.050	REMOTE - REVERB (LEFT ABOVE/RIGHT BELOW) MMX (INCLUDES REMOTE, MMX CLAMP, DISCRETE PUCK, 2000MM HOSE, BARB, NEW STRAIN RELIEF) - REVERB A2
2	11.6815.026.060	REMOTE - REVERB (RIGHT ABOVE/LEFT BELOW) MMX (INCLUDES REMOTE, MMX CLAMP, DISCRETE PUCK, 2000MM HOSE, BARB, NEW STRAIN RELIEF) - REVERB A2
	MATCHMAKER CLAMP	
3	11.5315.049.010	DISC BRAKE LEVER CLAMP SHIFTER MOUNTING BRACKET - (MMX) LEFT -GUIDE ULT/RSC/RS/RE/R,LEVEL ULT/TLM/TL, CODE RSC/R, DB5 ELIXIR 9/7/CR MAG/X0/ XX, QTY 1
3	11.5315.049.020	DISC BRAKE LEVER CLAMP SHIFTER MOUNTING BRACKET - (MMX) RIGHT -GUIDE ULT/RSC/RS/RE/R,LEVEL ULT/TLM/TL, CODE RSC/R, DB5 ELIXIR 9/7/CR MAG/X0/ XX, QTY 1
4	11.6818.001.000	REMOTE DISCRETE PUCK - HYDRAULIC REMOTE (SPACER) FOR XLOC REMOTES QTY2
	BARBS	
5	11.6815.022.010	SEATPOST HOSE BARB - REVERB POST (QTY 1) - REVERB
5	11.6815.022.020	SEATPOST HOSE BARB - REVERB POST (QTY 10) - REVERB
6	11.6815.022.030	REMOTE HOSE BARB - REVERB REMOTE (QTY 1) - REVERB
6	11.6815.022.040	REMOTE HOSE BARB - REVERB REMOTE (QTY 10) - REVERB
	TOOLS	
7	00.6815.066.030	SEATPOST BARB CONNECTOR - REVERB STEALTH
8	00.6815.066.020	SEATPOST BLEED TOOL - REVERB
9	00.6815.066.010	SEATPOST OIL HEIGHT TOOL - REVERB
10	00.6815.066.040	SEATPOST IFP HEIGHT TOOL - REVERB
11	11.6815.025.010	SEATPOST HYDRAULIC HOSE - (2000MM) KIT (INCLUDES NEW HOSE, NEW STRAIN RELIEF, NEW BARB) - REVERB A1-B1
12	11.6818.055.000	SEATPOST BLEED SCREW - REVERB STEALTH & REVERB REMOTE (INCLUDES BLEED SCREWS & O-RINGS) (QTY 10) REVERB REMOTE A1-A2, REVERB STEALTH A1-C1 (2011-2020)

PARAGON A1 (2015-2021)

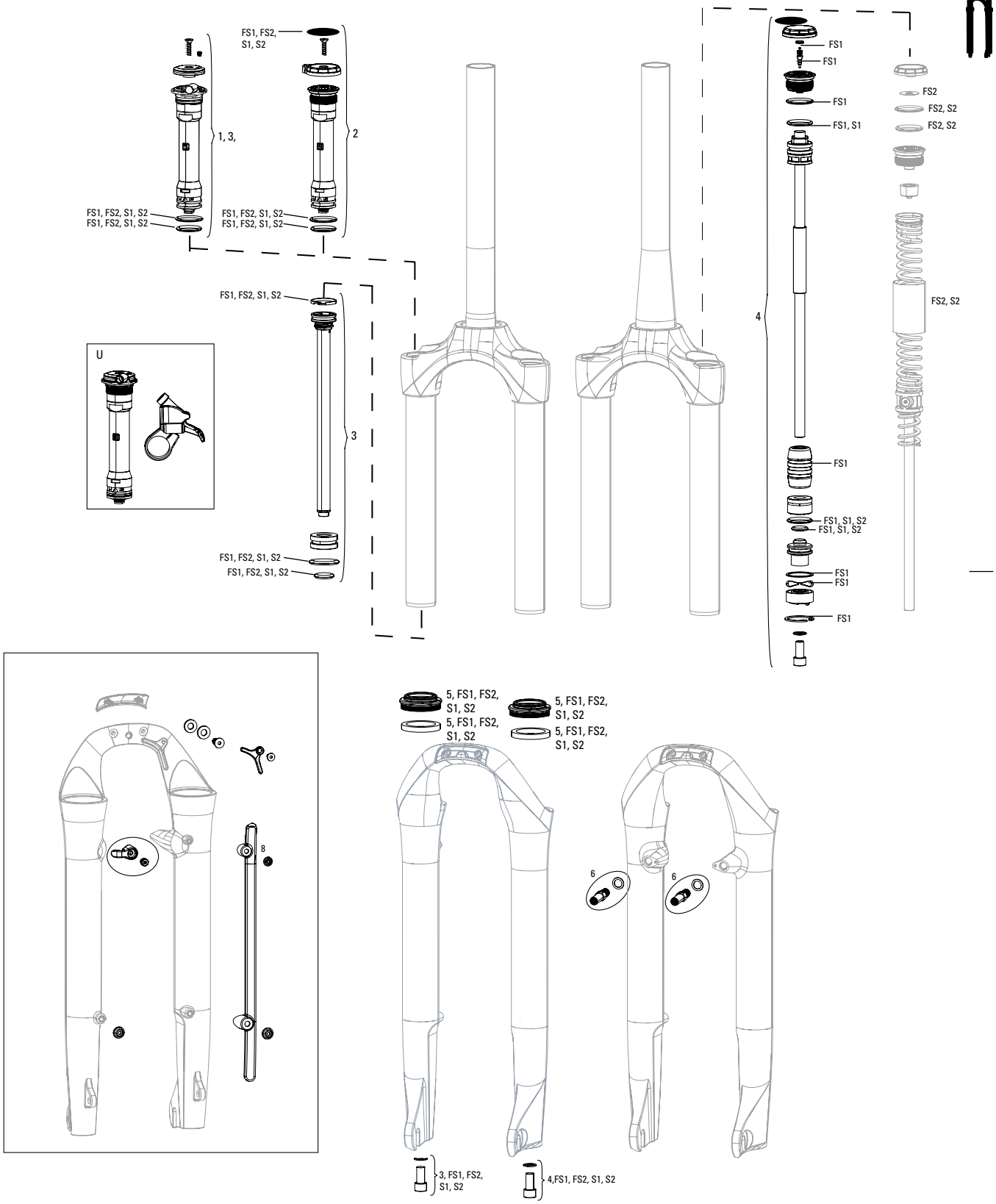

Note:

1. Full service kits include replaceable o-rings, glide rings, retaining rings, crush washers, crush washer retainers and shaft bolts/nuts. All basic service kits include the following replaceable wear items: o-rings, glide rings, dust seals, and foam rings.
2. All lower legs include bushings, foam rings and dust seals installed.
3. Paragon lower legs are only availbale in Post Mount or Disc Brake variants; not both together.
4. Decal page can be found in back of the catalog.

PARAGON A1-A2 (2015-2021)

	UPGRADE	
U	00.4318.002.020	REMOTE UPGRADE KIT - ONELOC RIGHT/ABOVE, LEFT/BELOW 10MM MCRL DAMPER PUSH TO LOCK (INCLUDES REMOTE, COMP DAMPER, CABLE&HOUSING) - PARAGON GOLD
ns	00.4318.002.008	REMOTE UPGRADE KIT - TURNKEY 30MM PARAGON GOLD - TURNKEY - INCLUDES REMOTE COMPRESSION DAMPER AND POPLOC REMOTE RIGHT (2015-2016)
	SERVICE	
FS1	11.4018.056.000	FORK SERVICE KIT - FULL SERVICE SOLO AIR (INCLUDES AIR SEALS, DAMPER SEALS & HARDWARE) - PARAGON GOLD A1
FS2	11.4018.056.001	FORK SERVICE KIT - FULL SERVICE SOLO AIR (INCLUDES AIR SEALS, DAMPER SEALS & HARDWARE) - PARAGON SILVER A1
S1	00.4315.032.530	AM FORK SERVICE KIT, BASIC (INCLUDES DUST SEALS, FOAM RINGS,O-RING SEALS) - PARAGON GOLD SOLO AIR A1
S2	00.4315.032.560	AM FORK SERVICE KIT, BASIC (INCLUDES DUST SEALS, FOAM RINGS,O-RING SEALS) - PARAGON SILVER COIL A1
	DAMPER	
2	11.4015.544.360	FORK COMPRESSION DAMPER - CROWN, (INCLUDES BLACK & WHITE KNOBS, FACEPLATE & SCREW) - PARAGON GOLD A1
1	11.4018.009.066	FORK DAMPER ASSEMBLY - REMOTE 17MM (POPLOC, PRE-2013 PUSHLOC) TURNKEY GOLD SOLO AIR (INCLUDES RIGHT SIDE INTERNALS) - PARAGON A1
3	11.4015.544.410	FORK COMPRESSION DAMPER - REMOTE 10MM (2013+ PUSHLOC, ONELOC, TWISTLOC) MOCO (INCLUDES SPOOL, CABLE CLAMP & SCREW) - PARAGON GOLD RL A1
ns	11.4018.009.070	FORK DAMPER ASSEMBLY - REMOTE 17mm (POPLOC, PRE-2013 PUSHLOC) TURNKEY COIL (INCLUDES RIGHT SIDE INTERNALS) - PARAGON SILVER A1
	SPRING	
4	11.4018.010.144	FORK SPRING SOLO AIR ASSEMBLY - 50MM (INCLUDES TOP CAP, AIR PISTON, SHAFT BOLT) - PARAGON GOLD A1
4	11.4018.010.145	FORK SPRING SOLO AIR ASSEMBLY - 65MM (INCLUDES TOP CAP, AIR PISTON, SHAFT BOLT) - PARAGON GOLD A1
	SPARES	
5	11.4018.028.006	FORK DUST WIPER KIT - 30MM BLACK (INCLUDES FLANGED DUST WIPERS & 5MM FOAM RINGS) - XC30/30GOLD/30 SILVER/PARAGON
6	11.4018.039.000	FORK LOWER LEG BRAKE POST KIT - (INCLUDES 2POSTS & WASHERS) - PARAGON GOLD/SILVER A1 (2015+)
8	11.4018.050.002	FORK LOWER LEG ACCESSORY KIT - FORK CABLE GUIDE - PARAGON GOLD/SILVER A1
	TOOLS	
ns	00.4318.030.000	FORK LOWER LEG DUST SEAL INSTALLATION TOOL 30MM (FOR FLANGELESS AND FLANGED DUST SEALS)
ns	11.4308.327.002	AIR VALVE KIT - SCHRADER CORE (QTY 2) - FORKS/SHOCKS/REVERB
ns	11.4018.028.007	FORK DUST WIPER KIT - 30MM BLACK (INCLUDES FLANGED DUST WIPERS) (QTY 20) - XC30/30 GOLD/30 SILVER/PARAGON
ns	00.4315.023.010	HIGH-PRESSURE FORK/SHOCK PUMP (300 PSI MAX) ROCKSHOX
	00.4315.022.010	REAR SHOCK SCHRADER VALVE REMOVAL TOOL ROCKSHOX
ns	11.4315.021.020	ROCKSHOX SUSPENSION OIL, 5WT, 120ML BOTTLE - FORK DAMPER
ns	11.4015.354.010	ROCKSHOX SUSPENSION OIL, 5WT, 1 LITER BOTTLE - FORK DAMPER
ns	11.4315.021.040	ROCKSHOX SUSPENSION OIL, 15WT, 120ML BOTTLE - LOWER LEGS
ns	11.4015.354.030	ROCKSHOX SUSPENSION OIL, 15WT, 1 LITER BOTTLE - LOWER LEGS
ns	00.4318.008.000	GREASE SRAM BUTTER 20ML SYRINGE, FRICTION REDUCING GREASE BYSLICKOLEUM - DOUBLE TIME HUB PAWLS, FORKS & REVERB SERVICE
ns	00.4318.008.001	GREASE SRAM BUTTER 1OZ CONTAINER, FRICTION REDUCING GREASE BY SLICKOLEUM - DOUBLE TIME HUB PAWLS, FORKS & REVERB SERVICE

XC28/DART (2013-2015)

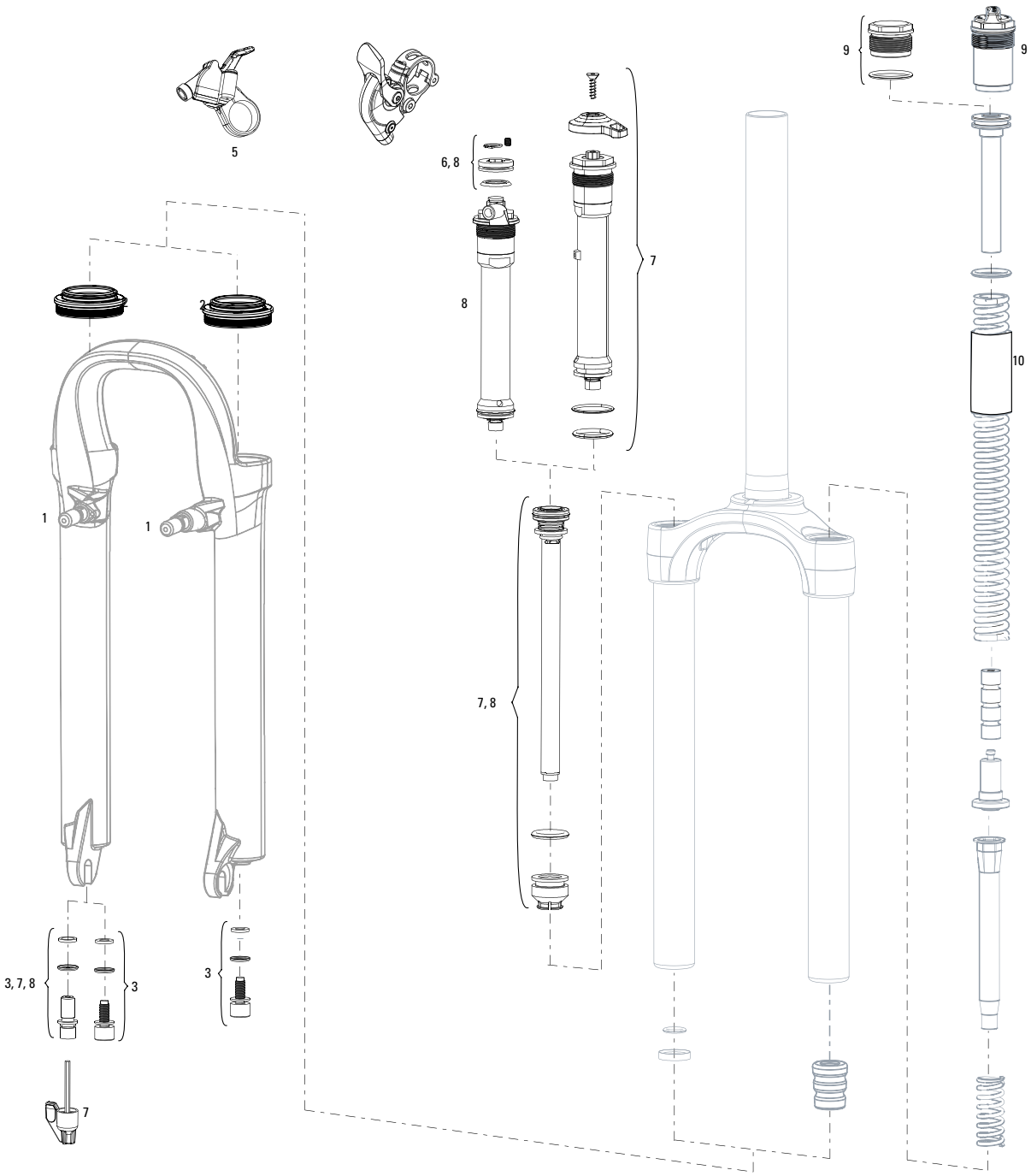

Note:
1. All lower legs include bushings, foam rings and dust seals installed.
2. Decal page can be found in back of the catalog.

XC28/DART (2013-2015)

	SERVICE	
1	11.4015.038.000	FORK LOWER LEG BRAKE POST KIT - (INCLUDES 2 POSTS & WASHERS) - DART/XC28
2	11.4307.250.000	FORK DUST WIPER KIT - 28MM GREY (INCLUDES FLANGED DUST WIPERS & 9MM FOAM RINGS) - JUDY PILOT/SID
3	11.4310.465.000	FORK SHAFT FASTENER KIT - (INCLUDES SHAFT BOLTS & CRUSH WASHERS)
5	11.4308.848.000	REMOTE - POPLOC LEFT 17MM CABLE PULL - RL (PRE-2013) & ALL TK DAMPERS, (NOT COMPATIBLE WITH 2013+ MOCO)
5	11.4309.207.000	REMOTE - POPLOC RIGHT 17MM CABLE PULL - RL (PRE-2013) & ALL TK DAMPERS
ns	11.4308.849.000	REMOTE - POPLOC LEFT ADJUSTABLE 17MM CABLE PULL (NOT COMPATIBLE WITH 2013+ MOCO RL) - RL (PRE-2013) & TK DAMPERS
ns	11.4309.208.000	REMOTE - POPLOC RIGHT ADJUSTABLE 17MM CABLE PULL (NOT COMPATIBLE WITH 2013+ MOCO RL) - RL (PRE-2013) & TK DAMPERS
6	11.4018.011.000	FORK COMPRESSION DAMPER KNOB KIT - REMOTE 17MM(POPLOC, PRE-2013 PUSHLOC) - XC28 2013-2015
7	11.4018.009.000	FORK DAMPER ASSEMBLY - CROWN TURNKEY 29 80-100MM (INCLUDES RIGHT SIDE INTERNALS) - XC28
8	11.4018.009.001	FORK DAMPER ASSEMBLY - REMOTE 17MM (POPLOC, PRE-2013 PUSHLOC) TURNKEY 29 80-100MM (INCLUDES RIGHT SIDE INTERNALS) - XC28
7	11.4018.009.002	FORK DAMPER ASSEMBLY - CROWN TURNKEY 26 80-120MM (INCLUDES RIGHT SIDE INTERNALS) - XC28
8	11.4018.009.003	FORK DAMPER ASSEMBLY - REMOTE 17MM (POPLOC, PRE-2013 PUSHLOC) TURNKEY 26 80-120MM (INCLUDES RIGHT SIDE INTERNALS) - XC28
9	11.4015.234.000	FORK SPRING COIL TOP CAP- (ALUMINUM PRE-LOAD & NON ADJUST) 28MM -DART/JUDY
10	11.4309.336.000	FORK SPRING COIL ISOLATOR KIT - (INCLUDES 3 HEAT-SHRINK COIL TUBES) REDUCES NOISE AND CHATTER
ns	11.4015.210.000	FORK SERVICE KIT - DART
ns	11.4315.021.020	ROCKSHOX SUSPENSION OIL, 5WT, 120ML BOTTLE - FORK DAMPER
ns	11.4015.354.010	ROCKSHOX SUSPENSION OIL, 5WT, 1 LITER BOTTLE - FORK DAMPER
ns	11.4315.021.040	ROCKSHOX SUSPENSION OIL, 15WT, 120ML BOTTLE - LOWER LEGS
ns	11.4015.354.030	ROCKSHOX SUSPENSION OIL, 15WT, 1 LITER BOTTLE - LOWER LEGS
ns	00.4318.008.000	GREASE SRAM BUTTER 20ML SYRINGE, FRICTION REDUCING GREASE BYSLICKOLEUM - DOUBLE TIME HUB PAWLS, FORKS & REVERB SERVICE
ns	00.4318.008.001	GREASE SRAM BUTTER 1OZ CONTAINER, FRICTION REDUCING GREASE BY SLICKOLEUM - DOUBLE TIME HUB PAWLS, FORKS & REVERB SERVICE
ns	11.4018.001.000	FORK SPRING COIL - X-SOFT (GREEN) -DART/XC28
ns	11.4018.001.001	FORK SPRING COIL - X-FIRM (BLUE) - DART/XC28

XC30 B1-B4 (2016-2020)

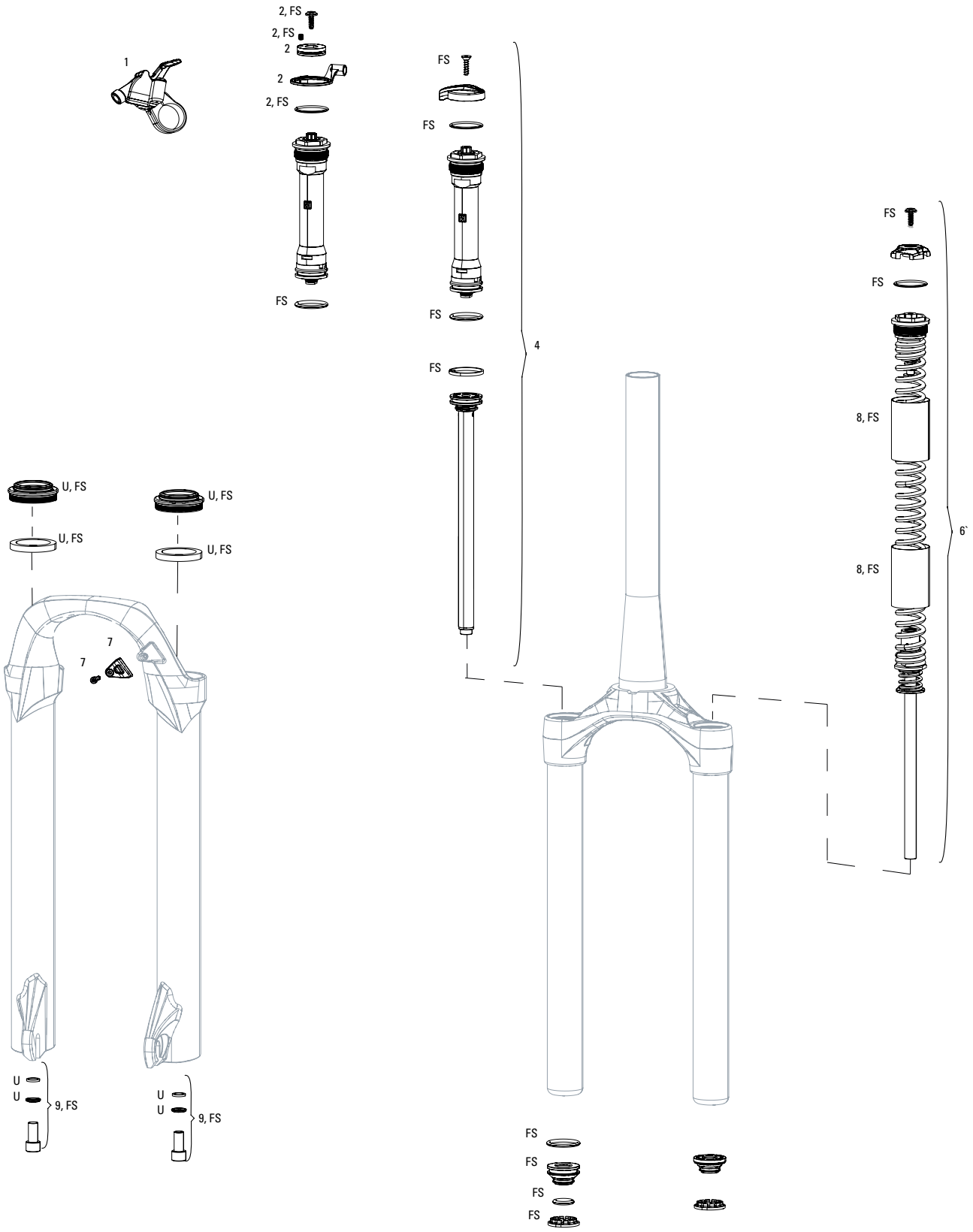

Note:

1. Full service kits include replaceable o-rings, glide rings, retaining rings, crush washers, crush washer retainers and shaft bolts/nuts. Not all service parts are pictured. All basic service kits include the following replaceable wear items: o-rings, glide rings, dust seals, and foam rings.
2. Decal page can be found in back of the catalog.
3. XC30 B1-B2 1.0mm CSU/Damper/Spring thread pitch. XC30 B3-B4 0.8mm CSU/Dampter/Spring thread pitch.

XC30 B1-B4 (2016-2020)

	UPGRADES	
U	00.4318.045.000	FORK DUST WIPER UPGRADE KIT - 30MM BLACK FLANGED LOW FRICTION SEALS (INCLUDES DUST WIPERS, 5MM & 10MM FOAM RINGS) - XC30/30GOLD/30SILVER/PARAGON/PSYLO/DUKE
	SERVICE	
FS	11.4015.539.030	FORK SERVICE KIT - FULL SERVICE COIL - XC30 B1, JUDY TK B1
	DAMPER INTERNALS	
1	11.4308.848.000	REMOTE - POPLOC LEFT 17MM CABLE PULL - RL (PRE-2013) & ALL TK DAMPERS, (NOT COMPATIBLE WITH 2013+ MOCO)
1	11.4309.207.000	REMOTE - POPLOC RIGHT 17MM CABLE PULL - RL (PRE-2013) & ALL TK DAMPERS
ns	11.4308.849.000	REMOTE - POPLOC LEFT ADJUSTABLE 17MM CABLE PULL (NOT COMPATIBLE WITH 2013+ MOCO RL) - RL (PRE-2013) & TK DAMPERS
ns	11.4309.208.000	REMOTE - POPLOC RIGHT ADJUSTABLE 17MM CABLE PULL (NOT COMPATIBLE WITH 2013+ MOCO RL) - RL (PRE-2013) & TK DAMPERS
2	11.4015.536.010	FORK COMPRESSION DAMPER KNOB KIT - REMOTE 17mm (POPLOC, PRE-2013 PUSHLOC) (INCLUDES SPOOL & CLAMP)- XC30/30 GOLD/30 SILVER/JUDY SILVER (NonBoost)/JUDY B1/JUDY GOLD (NonBoost)
4	11.4018.009.071	FORK DAMPER ASSEMBLY - CROWN TURNKEY COIL 27.5/29 80/100 CROWN ADJUST, 1.0MM THREAD (INCLUDES RIGHT SIDE INTERNALS) - XC30 B1-B2 (2016-2017)
4	11.4018.009.072	FORK DAMPER ASSEMBLY - REMOTE 17MM (POPLOC, PRE-2013 PUSHLOC) TURNKEY COIL 27.5/29 80/100 (INCLUDES RIGHT SIDE INTERNALS) - XC30 B1
4	11.4018.104.006	FORK DAMPER ASSEMBLY - CROWN TURNKEY COIL 27.5/29 80/100 CROWN ADJUST, 0.8MM THREAD (INCLUDES RIGHT SIDE INTERNALS) - XC30 B3-B4 (2018-2020)/JUDY TK B1 (2021)
4	11.4018.104.007	FORK DAMPER ASSEMBLY - REMOTE 17MM (POPLOC, PRE-2013 PUSHLOC) TURNKEY COIL, 0.8MM THREAD 27.5/29 80/100 (INCLUDES RIGHT SIDE INTERNALS) - XC30 B3-B4 (2018-2020)/JUDY TK B1 (2021)
	SPRING	
6	11.4018.010.161	FORK SPRING COIL - X-SOFT (SILVER) 100MM-27.5/29 - XC30 B1-B4 (2016- 2019)/JUDY TK B1 (2021)
6	11.4018.010.165	FORK SPRING COIL - X-FIRM (BLACK) 100MM-27.5/29 - XC30 B1-B4 (2016- 2019)/JUDY TK B1 (2021)
6	11.4018.010.166	FORK SPRING COIL - X-SOFT (SILVER) 120MM-27.5/29 - XC30 B1-B4 (2016- 2019)/JUDY TK B1 (2021)
	SPARES	
7	11.4015.534.010	FORK HOSE CLAMP - PIKE/LYRIK/YARI/SID/REVELATION/BOXXER/XC30/30G/30S/RECON/SEKTOR/BLUTO/REBA/35G/35S
8	11.4309.336.000	FORK SPRING COIL ISOLATOR KIT - (INCLUDES 3 HEAT-SHRINK COIL TUBES) REDUCES NOISE AND CHATTER
9	11.4310.465.000	FORK SHAFT FASTENER KIT - (INCLUDES SHAFT BOLTS & CRUSH WASHERS)
bulk	11.4015.259.000	FORK CRUSH WASHERS - 8MM (QTY 50)
bulk	11.4015.260.000	FORK CRUSH WASHER RETAINER - 8MM (QTY 50)
bulk	11.4018.028.008	FORK FOAM RING KIT - 30MM X 5MM (QTY 20) - XC30/30 GOLD/30 SILVER
	TOOLS & GREASE	
ns	00.4318.030.000	FORK LOWER LEG DUST SEAL INSTALLATION TOOL 30MM (FOR FLANGELESS AND FLANGED DUST SEALS)
ns	11.4315.021.020	ROCKSHOX SUSPENSION OIL, 5WT, 120ML BOTTLE - FORK DAMPER
ns	11.4015.354.010	ROCKSHOX SUSPENSION OIL, 5WT, 1 LITER BOTTLE - FORK DAMPER
ns	11.4315.021.040	ROCKSHOX SUSPENSION OIL, 15WT, 120ML BOTTLE - LOWER LEGS
ns	11.4015.354.030	ROCKSHOX SUSPENSION OIL, 15WT, 1 LITER BOTTLE - LOWER LEGS
ns	00.4318.008.000	GREASE SRAM BUTTER 20ML SYRINGE, FRICTION REDUCING GREASE BYSLICKOLEUM - DOUBLE TIME HUB PAWLS, FORKS & REVERB SERVICE
ns	00.4318.008.001	GREASE SRAM BUTTER 1OZ CONTAINER, FRICTION REDUCING GREASE BY SLICKOLEUM - DOUBLE TIME HUB PAWLS, FORKS & REVERB SERVICE

XC30 A1-A3 (2012-2015)

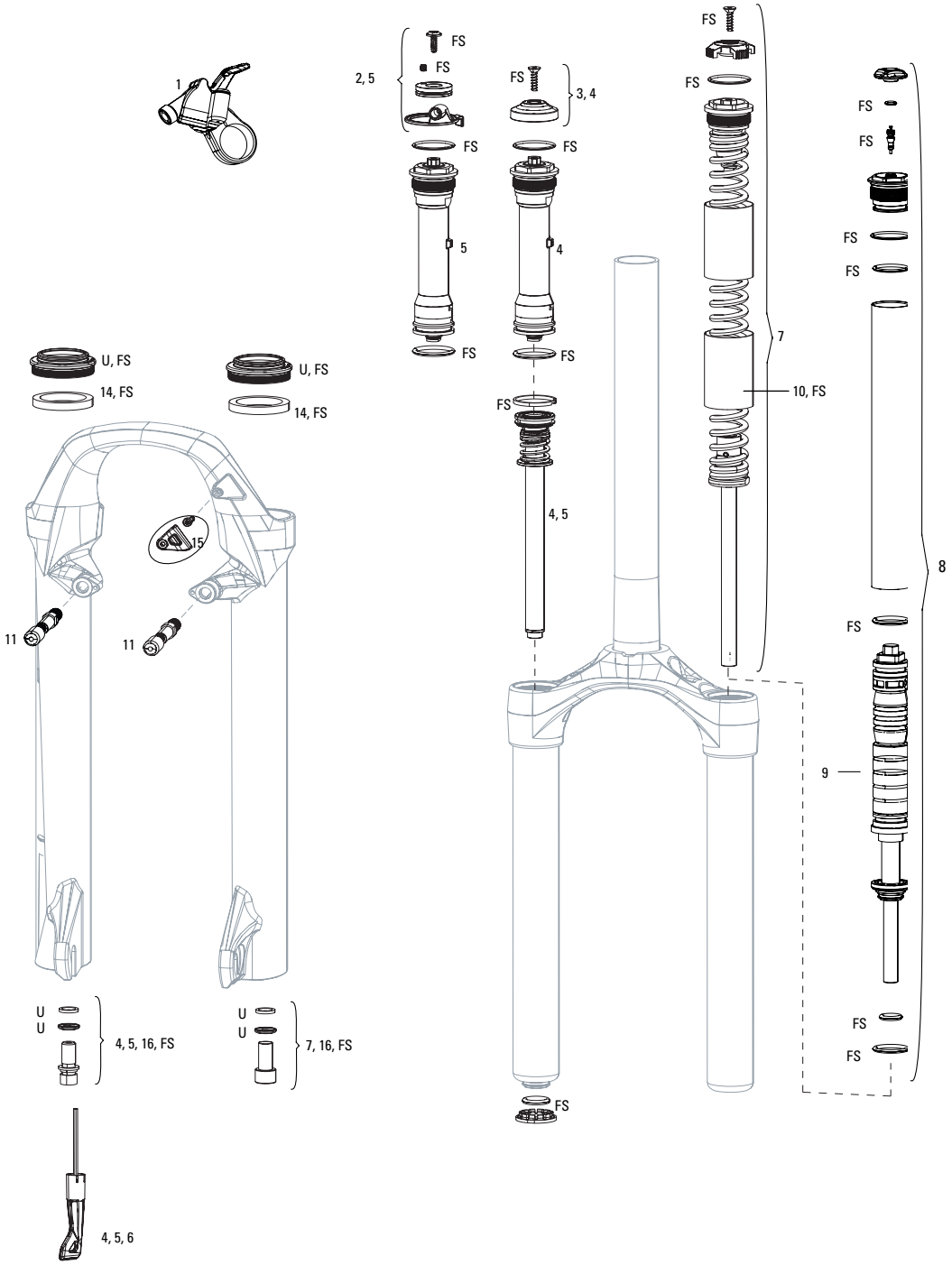

Note:

1. If your 29" 80mm travel fork CSU measures 321 +/-2 from the top of the crown to the bottom of the stanchion, you will need to use Air Spring 11.4018.010.152
2. Full service kits include replaceable o-rings, glide rings, retaining rings, crush washers, crush washer retainers and shaft bolts/nuts. Not all service parts are pictured. All basic service kits include the following replaceable wear items: o-rings, glide rings, dust seals, and foam rings.
3. Decal page can be found in back of the catalog.

XC30 A1-A3 (2012-2015)

	UPGRADES	
U	00.4318.045.000	FORK DUST WIPER UPGRADE KIT - 30MM BLACK FLANGED LOW FRICTION SEALS (INCLUDES DUST WIPERS, 5MM & 10MM FOAM RINGS) - XC30/30GOLD/30SILVER/PARAGON/PSYLO/DUKE
	SERVICE	
FS	11.4015.539.020	FORK SERVICE KIT - FULL SERVICE COIL & SOLO AIR - XC30 A1-A3/30 SILVER A1
	DAMPER INTERNALS	
1	11.4308.848.000	REMOTE - POPLOC LEFT 17MM CABLE PULL - RL (PRE-2013) & ALL TK DAMPERS, (NOT COMPATIBLE WITH 2013+ MOCO)
1	11.4309.207.000	REMOTE - POPLOC RIGHT 17MM CABLE PULL - RL (PRE-2013) & ALL TK DAMPERS
na	11.4308.849.000	REMOTE - POPLOC LEFT ADJUSTABLE 17MM CABLE PULL (NOT COMPATIBLE WITH 2013+ MOCO RL) - RL (PRE-2013) & TK DAMPERS
na	11.4309.208.000	REMOTE - POPLOC RIGHT ADJUSTABLE 17MM CABLE PULL (NOT COMPATIBLE WITH 2013+ MOCO RL) - RL (PRE-2013) & TK DAMPERS
2	11.4015.536.010	FORK COMPRESSION DAMPER KNOB KIT - REMOTE 17mm (POPLOC, PRE-2013 PUSHLOC) (INCLUDES SPOOL & CLAMP)- XC30/30 GOLD/30 SILVER/JUDY SILVER (NonBoost)/JUDY B1/JUDY GOLD (NonBoost)
3	11.4015.461.050	FORK COMPRESSION DAMPER KNOB KIT - CROWN TURNKEY - RECON/SEKTOR/30 GOLD/30 SILVER/XC32/XC30 A1-A3
4	11.4018.009.034	FORK DAMPER ASSEMBLY - CROWN TURNKEY 26/29 100MM (INCLUDES RIGHT SIDE INTERNALS) - XC30 A1-A3/30 SILVER A1
4	11.4018.009.036	FORK DAMPER ASSEMBLY - CROWN TURNKEY 27.5 80-100 (INCLUDES RIGHT SIDE INTERNALS) - XC30 A1-A3/30 SILVER A1
4	11.4018.009.063	FORK DAMPER ASSEMBLY - CROWN TURNKEY 26 SOLO AIR 80-100 CROWN ADJUST (INCLUDES RIGHT SIDE INTERNALS) - XC30 A1
5	11.4018.009.035	FORK DAMPER ASSEMBLY - REMOTE 17MM (POPLOC, PRE-2013 PUSHLOC) 26 29 100MM (INCLUDES RIGHT SIDE INTERNALS) - XC30 A1-A3/30 SILVER A1
5	11.4018.009.033	FORK DAMPER ASSEMBLY - REMOTE 17MM (POPLOC, PRE-2013 PUSHLOC) 26 29 80MM (INCLUDES RIGHT SIDE INTERNALS) - XC30 A1-A3/30 SILVER A1
5	11.4018.009.037	FORK DAMPER ASSEMBLY - REMOTE 17MM (POPLOC, PRE-2013 PUSHLOC) 27.5 80-100MM (INCLUDES RIGHT SIDE INTERNALS) - XC30 A1-A3/30 SILVER A1
5	11.4018.009.064	FORK DAMPER ASSEMBLY - REMOTE 17MM (POPLOC, PRE-2013 PUSHLOC) TURNKEY 26 SOLO AIR 80-100 (INCLUDES RIGHT SIDE INTERNALS) - XC30 A1
6	11.4018.033.002	FORK REBOUND DAMPER KNOB KIT - (INCLUDES ADJUSTER KNOB) 29" - XC30A1-A3/30 GOLD A1+/JUDY GOLD A1+/30 SILVER A1, SEKTOR SILVER A1+/RECON A1+
	SPRING INTERNALS	
7	11.4015.538.010	FORK SPRING COIL - X-SOFT (SILVER) 100MM-26 (INCLUDES TOP CAP & ADJUSTER KNOB) - XC30 A1-A3/30 SILVER A1-A2
7	11.4015.538.020	FORK SPRING COIL - SOFT (YELLOW) 100MM-26 (INCLUDES TOP CAP & ADJUSTER KNOB) - XC30 A1-A3/30 SILVER A1-A2-A2
7	11.4015.538.040	FORK SPRING COIL - FIRM (BLUE) 100MM-26 (INCLUDES TOP CAP & ADJUSTER KNOB) - XC30 A1-A3/30 SILVER A1-A2
7	11.4015.538.050	FORK SPRING COIL - X-FIRM (BLACK) 100MM-26 (INCLUDES TOP CAP & ADJUSTER KNOB) - XC30 A1-A3/30 SILVER A1-A2
7	11.4018.010.092	FORK SPRING COIL - X-SOFT (SILVER) 100MM-XC30 27.5 A1-A3/30SILVER 27.5/29 A1
7	11.4018.010.096	FORK SPRING COIL - X-FIRM (BLACK) 100MM-27 100MM - XC30 27.5 A1-A3/30 SILVER 27.5/29 A1
7	11.4018.010.097	FORK SPRING SOLO AIR ASSEMBLY - 100MM-27.5 (INCLUDES TOP CAP, AIR PISTON, SHAFT BOLT)- XC3027.5 A1-A3/30 SILVER 27.5/29 A1
7	11.4018.010.026	FORK SPRING COIL - X-SOFT (SILVER) 100MM-29 - XC30
7	11.4018.010.030	FORK SPRING COIL - X-FIRM (BLACK) XC30 100MM-29 - XC30
8	11.4018.010.149	FORK SPRING SOLO AIR ASSEMBLY - 80MM-27.5/29 (INCLUDES TOP CAP, AIR PISTON, SHAFT BOLT) - XC30 A1-A3/30 SILVER A1-A2
8	11.4018.010.153	FORK SPRING SOLO AIR ASSEMBLY - 100MM-29 (UPPER TUBE 300) (279MM AIR SPRING LENGTH, INCLUDES TOP CAP, AIR PISTON, SHAFT BOLT) - XC30 A1-A3
9	11.4018.034.000	FORK SPRING TRAVEL SPACERS - SOLO AIR (USED TO CHANGE TRAVEL) - RECON/RECON BOOST, 30 GOLD/SILVER, XC 32/30, PARAGON, SEKTOR SILVER, 35G/JUDY G
10	11.4309.336.000	FORK SPRING COIL ISOLATOR KIT - (INCLUDES 3 HEAT-SHRINK COIL TUBES) REDUCES NOISE AND CHATTER
ns	11.4018.010.098	FORK SPRING SOLO AIR ASSEMBLY - 120MM-27.5 (INCLUDES TOP CAP, AIR PISTON, SHAFT BOLT)- XC30 27.5 A1-A3/30 SILVER 27.5/29 A1
ns	11.4018.010.151	FORK SPRING SOLO AIR ASSEMBLY - 100MM-26 (INCLUDES TOP CAP, AIR PISTON, SHAFT BOLT) - XC30 A1-A3/30 SILVER A1-A2
	SPARES	
11	11.4307.469.000	FORK BRAKE POST KIT - STEEL (QTY 2)
12	11.4018.028.006	FORK DUST WIPER KIT - 30MM BLACK (INCLUDES FLANGED DUST WIPERS & 5MM FOAM RINGS) - XC30/30GOLD/30 SILVER/PARAGON
13	11.4018.028.007	FORK DUST WIPER KIT - 30MM BLACK (INCLUDES FLANGED DUST WIPERS) (QTY 20) - XC30/30 GOLD/30 SILVER/PARAGON
14	11.4018.028.008	FORK FOAM RING KIT - 30MM X 5MM (QTY 20) - XC30/30 GOLD/30 SILVER
15	11.4015.534.010	FORK HOSE CLAMP - PIKE/LYRIK/YARI/SID/REVELATION/BOXXER/XC30/30G/30S/RECON/SEKTOR/BLUTO/REBA/35G/35S
16	11.4310.465.000	FORK SHAFT FASTENER KIT - (INCLUDES SHAFT BOLTS & CRUSH WASHERS)
bulk	11.4015.259.000	FORK CRUSH WASHERS - 8MM (QTY 50)
bulk	11.4015.260.000	FORK CRUSH WASHER RETAINER - 8MM (QTY 50)
	TOOLS & GREASE	
ns	00.4318.030.000	FORK LOWER LEG DUST SEAL INSTALLATION TOOL 30MM (FOR FLANGELESS AND FLANGED DUST SEALS)
ns	11.4315.021.020	ROCKSHOX SUSPENSION OIL, 5WT, 120ML BOTTLE - FORK DAMPER
ns	11.4015.354.010	ROCKSHOX SUSPENSION OIL, 5WT, 1 LITER BOTTLE - FORK DAMPER
ns	11.4315.021.040	ROCKSHOX SUSPENSION OIL, 15WT, 120ML BOTTLE - LOWER LEGS
ns	11.4015.354.030	ROCKSHOX SUSPENSION OIL, 15WT, 1 LITER BOTTLE - LOWER LEGS
ns	00.4318.008.000	GREASE SRAM BUTTER 20ML SYRINGE, FRICTION REDUCING GREASE BYSLICKOLEUM - DOUBLE TIME HUB PAWLS, FORKS & REVERB SERVICE
ns	00.4318.008.001	GREASE SRAM BUTTER 1OZ CONTAINER, FRICTION REDUCING GREASE BY SLICKOLEUM - DOUBLE TIME HUB PAWLS, FORKS & REVERB SERVICE

30 SILVER A3-A5 (2017-2020)

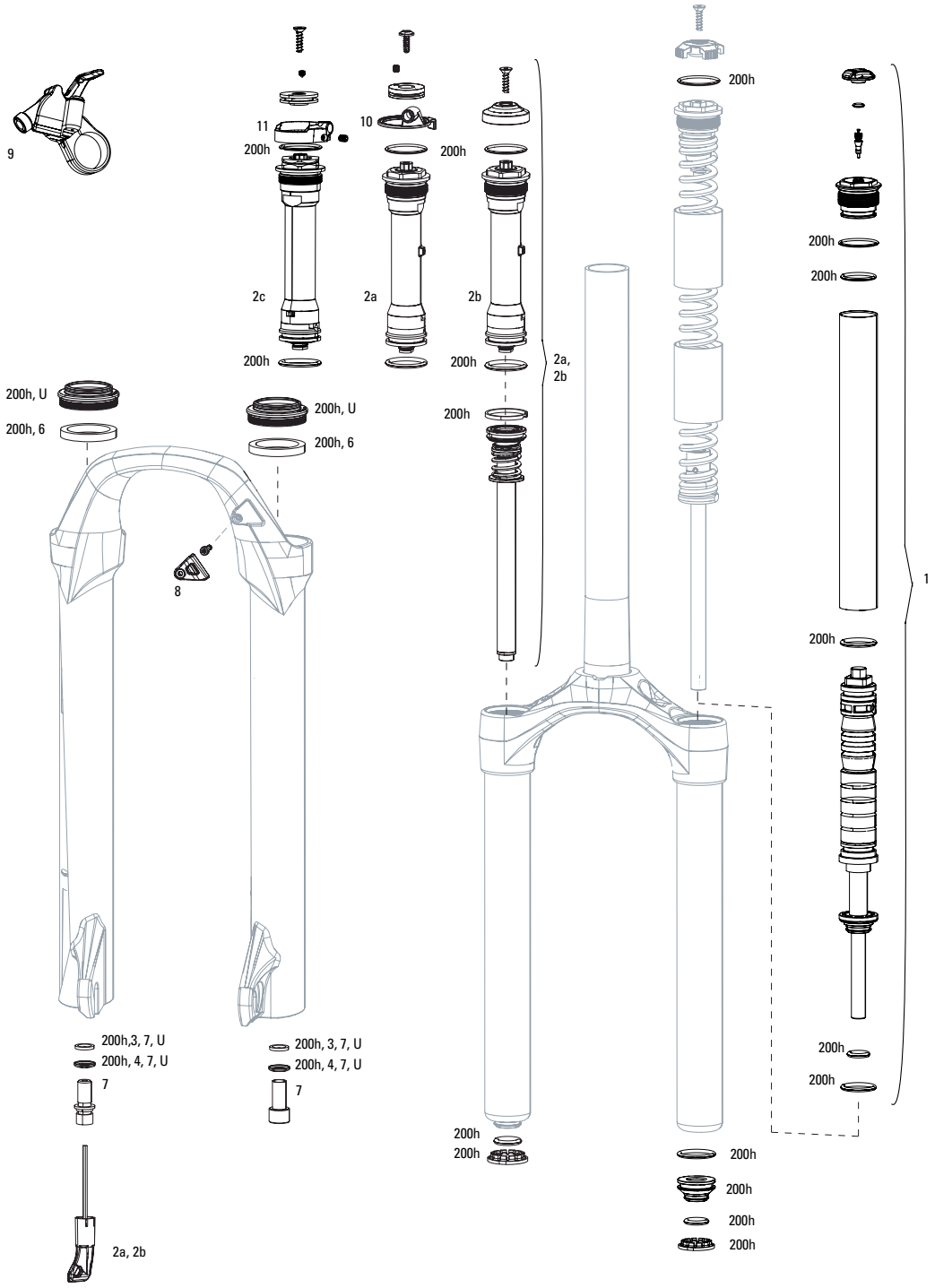

Note:

1. 200H service kits include replaceable o-rings, glide rings, crush washers, crush washer retainers and wiper seals. All basic service kits include the following replaceable wear items: o-rings, glide rings, dust seals, and foam rings.
2. Decal page can be found in back of the catalog.
3. A3 Spring Internals and Damper Internals (.8mm thread pitch) are not compatible with A1-A2 30 Silver (1.0mm thread pitch)

30 SILVER A3-A5 (2017-2020)

	UPGRADES	
U	00.4318.045.000	FORK DUST WIPER UPGRADE KIT - 30MM BLACK FLANGED LOW FRICTION SEALS (INCLUDES DUST WIPERS, 5MM & 10MM FOAM RINGS) - XC30/30GOLD/30SILVER/PARAGON/PSYLO/DUKE
	SERVICE	
200h	00.4315.032.649	200 HOUR/1 YEAR SERVICE KIT (INCLUDES DUST SEALS, FOAM RINGS, O-RING SEALS) - 30 GOLD AND SILVER (2018+)
	SPRING INTERNALS	
1	11.4018.010.231	FORK SPRING SOLO AIR ASSEMBLY - 80-120 MM-27.5/29 (THREAD PITCH 0.8MM) (INCLUDES TOP CAP, AIR PISTON, SHAFT BOLT) - JUDY SILVER A1/ 30 SILVER A3(2018+)
	DAMPER INTERNALS	
2b	11.4018.009.098	FORK DAMPER ASSEMBLY - CROWN TURNKEY (THREAD PITCH 0.8MM) (INCLUDES RIGHT SIDE INTERNALS) - 26" - JUDY SILVER A1+/ 30 SILVER A3+ (2018+)
2a	11.4018.009.099	FORK DAMPER ASSEMBLY - REMOTE 17MM (POPLOC, PRE-2013 PUSHLOC) TURNKEY (THREAD PITCH 0.8MM) (INCLUDES RIGHT SIDE INTERNALS) - 26" - JUDY SILVER A1+/30 SILVER A3+ (2018+)
2b	11.4018.104.017	FORK DAMPER ASSEMBLY - CROWN TURNKEY (THREAD PITCH 0.8MM) (INCLUDES RIGHT SIDE INTERNALS) - 27"/29" - JUDY SILVER A1+/ 30 SILVER A3+ (2018+)
2c	11.4018.104.018	FORK DAMPER ASSEMBLY - REMOTE 17MM (POPLOC, PRE-2013 PUSHLOC) TURNKEY (THREAD PITCH 0.8MM) (INCLUDES RIGHT SIDE INTERNALS) - 27"/29" - JUDY SILVER A1+/30 SILVER A3+ (2018+)
10	11.4015.536.010	FORK COMPRESSION DAMPER KNOB KIT - REMOTE 17mm (POPLOC, PRE-2013 PUSHLOC) (INCLUDES SPOOL & CLAMP)- XC30/30 GOLD/30 SILVER/JUDY SILVER (NonBoost)/JUDY B1/JUDY GOLD (NonBoost)
11	11.4018.082.028	FORK COMPRESSION DAMPER SPARE HOUSING STOP - FITS TK AND RL REMOTE DAMPERS (INCLUDES HOUSING STOP AND SET SCREW) - JUDY/RECON/30/35 (2020-2021)
	SPARES	
3	11.4015.259.000	FORK CRUSH WASHERS - 8MM (QTY 50)
4	11.4015.260.000	FORK CRUSH WASHER RETAINER - 8MM (QTY 50)
6	11.4018.028.008	FORK FOAM RING KIT - 30MM X 5MM (QTY 20) - XC30/30 GOLD/30 SILVER
7	11.4310.465.000	FORK SHAFT FASTENER KIT - (INCLUDES SHAFT BOLTS & CRUSH WASHERS)
8	11.4015.534.010	FORK HOSE CLAMP - PIKE/LYRIK/YARI/SID/REVELATION/BOXXER/XC30/30G/30S/RECON/SEKTOR/BLUTO/REBA/35G/35S
9	11.4308.848.000	REMOTE - POPLOC LEFT 17MM CABLE PULL - RL (PRE-2013) & ALL TK DAMPERS, (NOT COMPATIBLE WITH 2013+ MOCO)
9	11.4309.207.000	REMOTE - POPLOC RIGHT 17MM CABLE PULL - RL (PRE-2013) & ALL TK DAMPERS
9	11.4308.849.000	REMOTE - POPLOC LEFT ADJUSTABLE 17MM CABLE PULL (NOT COMPATIBLE WITH 2013+ MOCO RL) - RL (PRE-2013) & TK DAMPERS
9	11.4309.208.000	REMOTE - POPLOC RIGHT ADJUSTABLE 17MM CABLE PULL (NOT COMPATIBLE WITH 2013+ MOCO RL) - RL (PRE-2013) & TK DAMPERS
9	11.4015.536.010	FORK COMPRESSION DAMPER KNOB KIT - REMOTE 17mm (POPLOC, PRE-2013 PUSHLOC) (INCLUDES SPOOL & CLAMP)- XC30/30 GOLD/30 SILVER/JUDY SILVER (NonBoost)/JUDY B1/JUDY GOLD (NonBoost)
	TOOLS & GREASE	
ns	00.4318.030.000	FORK LOWER LEG DUST SEAL INSTALLATION TOOL 30MM (FOR FLANGELESS AND FLANGED DUST SEALS)
ns	11.4015.354.010	ROCKSHOX SUSPENSION OIL, 5WT, 1 LITER BOTTLE - FORK DAMPER
ns	11.4315.021.020	ROCKSHOX SUSPENSION OIL, 5WT, 120ML BOTTLE - FORK DAMPER
ns	11.4315.021.040	ROCKSHOX SUSPENSION OIL, 15WT, 120ML BOTTLE - LOWER LEGS
ns	11.4015.354.030	ROCKSHOX SUSPENSION OIL, 15WT, 1 LITER BOTTLE - LOWER LEGS
ns	00.4318.008.000	GREASE SRAM BUTTER 20ML SYRINGE, FRICTION REDUCING GREASE BYSLICKOLEUM - DOUBLE TIME HUB PAWLS, FORKS & REVERB SERVICE
ns	00.4318.008.001	GREASE SRAM BUTTER 1OZ CONTAINER, FRICTION REDUCING GREASE BY SLICKOLEUM - DOUBLE TIME HUB PAWLS, FORKS & REVERB SERVICE

30 SILVER A1-A2 (2016)

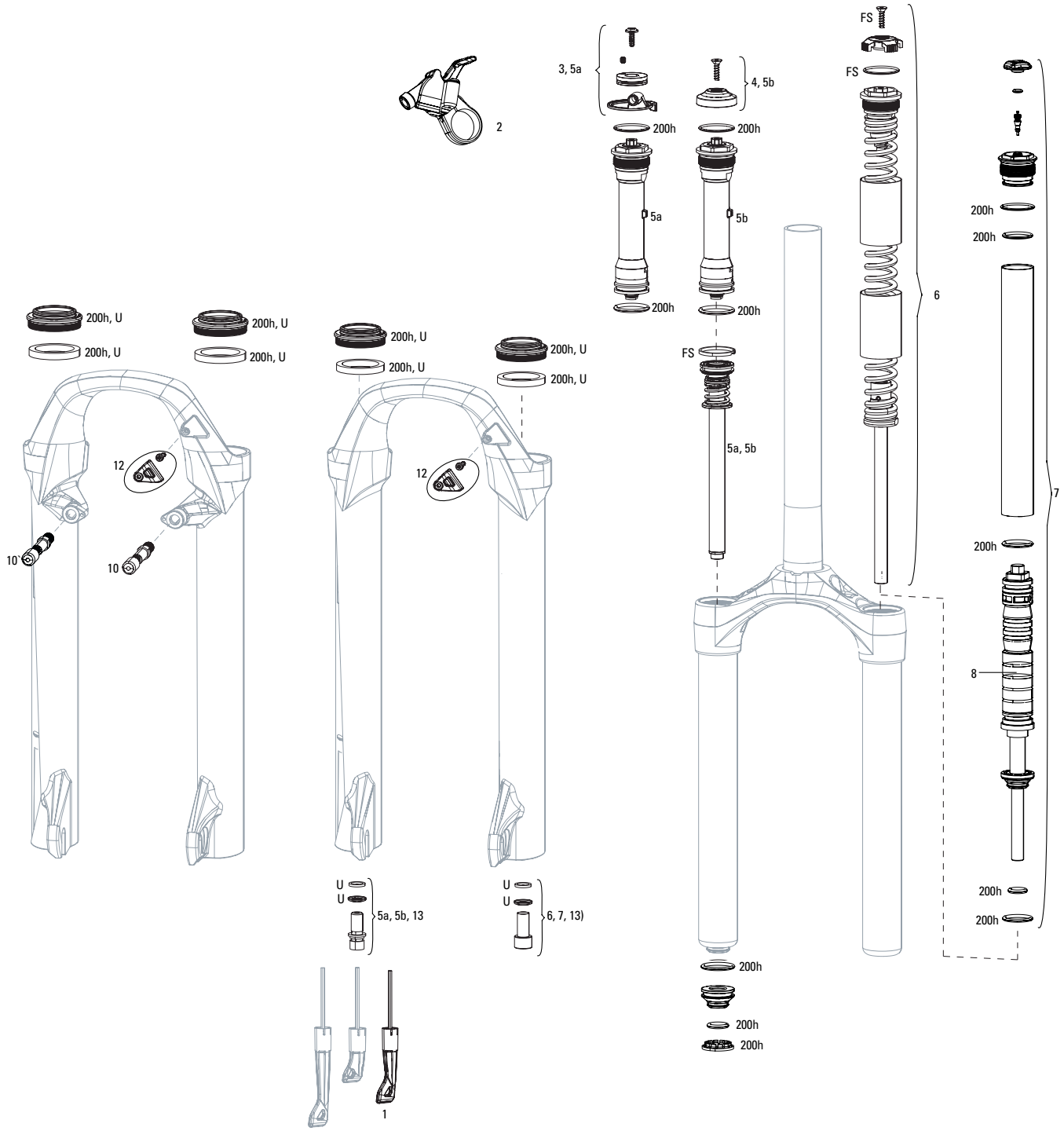

Note:

1. 200H service kits include replaceable o-rings, glide rings, crush washers, crush washer retainers and wiper seals.
2. Decal page can be found in back of the catalog.
3. A3 Spring Internals and Damper Internals (.8mm thread pitch) are not compatible with A1-A2 30 Silver (1.0mm thread pitch)

30 SILVER A1-A2 (2016)

	UPGRADES	
U	00.4318.045.000	FORK DUST WIPER UPGRADE KIT - 30MM BLACK FLANGED LOW FRICTION SEALS (INCLUDES DUST WIPERS, 5MM & 10MM FOAM RINGS) - XC30/30GOLD/30SILVER/PARAGON/PSYLO/DUK
	SERVICE	
200h	00.4315.032.649	200 HOUR/1 YEAR SERVICE KIT (INCLUDES DUST SEALS, FOAM RINGS, O-RING SEALS) - 30 GOLD AND SILVER (2018+)
	DAMPER INTERNALS	
1	11.4018.033.002	FORK REBOUND DAMPER KNOB KIT - (INCLUDES ADJUSTER KNOB) 29" - XC30A1-A3/30 GOLD A1+/JUDY GOLD A1+/30 SILVER A1, SEKTOR SILVER A1+/RECON A1+
2	11.4308.848.000	REMOTE - POPLOC LEFT 17MM CABLE PULL - RL (PRE-2013) & ALL TK DAMPERS, (NOT COMPATIBLE WITH 2013+ MOCO)
2	11.4309.207.000	REMOTE - POPLOC RIGHT 17MM CABLE PULL - RL (PRE-2013) & ALL TK DAMPERS
na	11.4308.849.000	REMOTE - POPLOC LEFT ADJUSTABLE 17MM CABLE PULL (NOT COMPATIBLE WITH 2013+ MOCO RL) - RL (PRE-2013) & TK DAMPERS
na	11.4309.208.000	REMOTE - POPLOC RIGHT ADJUSTABLE 17MM CABLE PULL (NOT COMPATIBLE WITH 2013+ MOCO RL) - RL (PRE-2013) & TK DAMPERS
3	11.4015.536.010	FORK COMPRESSION DAMPER KNOB KIT - REMOTE 17mm (POPLOC, PRE-2013 PUSHLOC) (INCLUDES SPOOL & CLAMP)- XC30/30 GOLD/30 SILVER/JUDY SILVER (NonBoost)/JUDY B1/JUDY GOLD (NonBoost)
4	11.4015.461.050	FORK COMPRESSION DAMPER KNOB KIT - CROWN TURNKEY - RECON/SEKTOR/30 GOLD/30 SILVER/XC32/XC30 A1-A3
5a	11.4018.009.035	FORK DAMPER ASSEMBLY - REMOTE 17MM (POPLOC, PRE-2013 PUSHLOC) 26 29 100MM (INCLUDES RIGHT SIDE INTERNALS) - XC30 A1-A3/30 SILVER A1
5a	11.4018.009.033	FORK DAMPER ASSEMBLY - REMOTE 17MM (POPLOC, PRE-2013 PUSHLOC) 26 29 80MM (INCLUDES RIGHT SIDE INTERNALS) - XC30 A1-A3/30 SILVER A1
5a	11.4018.009.037	FORK DAMPER ASSEMBLY - REMOTE 17MM (POPLOC, PRE-2013 PUSHLOC) 27.5 80-100MM (INCLUDES RIGHT SIDE INTERNALS) - XC30 A1-A3/30 SILVER A1
5a	11.4018.009.064	FORK DAMPER ASSEMBLY - REMOTE 17MM (POPLOC, PRE-2013 PUSHLOC) TURNKEY 26 SOLO AIR 80-100 (INCLUDES RIGHT SIDE INTERNALS) - XC30 A1
5b	11.4018.009.034	FORK DAMPER ASSEMBLY - CROWN TURNKEY 26/29 100MM (INCLUDES RIGHT SIDE INTERNALS) - XC30 A1-A3/30 SILVER A1
5b	11.4018.009.036	FORK DAMPER ASSEMBLY - CROWN TURNKEY 27.5 80-100 (INCLUDES RIGHT SIDE INTERNALS) - XC30 A1-A3/30 SILVER A1
5b	11.4018.009.063	FORK DAMPER ASSEMBLY - CROWN TURNKEY 26 SOLO AIR 80-100 CROWN ADJUST (INCLUDES RIGHT SIDE INTERNALS) - XC30 A1
	SPRING INTERNALS	
6	11.4015.538.010	FORK SPRING COIL - X-SOFT (SILVER) 100MM-26 (INCLUDES TOP CAP & ADJUSTER KNOB) - XC30 A1-A3/30 SILVER A1-A2
6	11.4015.538.020	FORK SPRING COIL - SOFT (YELLOW) 100MM-26 (INCLUDES TOP CAP & ADJUSTER KNOB) - XC30 A1-A3/30 SILVER A1-A2-A2
6	11.4015.538.040	FORK SPRING COIL - FIRM (BLUE) 100MM-26 (INCLUDES TOP CAP & ADJUSTER KNOB) - XC30 A1-A3/30 SILVER A1-A2
6	11.4015.538.050	FORK SPRING COIL - X-FIRM (BLACK) 100MM-26 (INCLUDES TOP CAP & ADJUSTER KNOB) - XC30 A1-A3/30 SILVER A1-A2
6	11.4018.010.092	FORK SPRING COIL - X-SOFT (SILVER) 100MM-XC30 27.5 A1-A3/30SILVER 27.5/29 A1
6	11.4018.010.096	FORK SPRING COIL - X-FIRM (BLACK) 100MM-27 100MM - XC30 27.5 A1-A3/30 SILVER 27.5/29 A1
7	11.4018.010.097	FORK SPRING SOLO AIR ASSEMBLY - 100MM-27.5 (INCLUDES TOP CAP, AIR PISTON, SHAFT BOLT)- XC3027.5 A1-A3/30 SILVER 27.5/29 A1
7	11.4018.010.149	FORK SPRING SOLO AIR ASSEMBLY - 80MM-27.5/29 (INCLUDES TOP CAP, AIR PISTON, SHAFT BOLT) - XC30 A1-A3/30 SILVER A1-A2
8	11.4018.034.000	FORK SPRING TRAVEL SPACERS - SOLO AIR (USED TO CHANGE TRAVEL) - RECON/RECON BOOST, 30 GOLD/SILVER, XC 32/30, PARAGON, SEKTOR SILVER, 35G/JUDY G
9	11.4309.336.000	FORK SPRING COIL ISOLATOR KIT - (INCLUDES 3 HEAT-SHRINK COIL TUBES) REDUCES NOISE AND CHATTER
ns	11.4018.010.098	FORK SPRING SOLO AIR ASSEMBLY - 120MM-27.5 (INCLUDES TOP CAP, AIR PISTON, SHAFT BOLT)- XC30 27.5 A1-A3/30 SILVER 27.5/29 A1
ns	11.4018.010.151	FORK SPRING SOLO AIR ASSEMBLY - 100MM-26 (INCLUDES TOP CAP, AIR PISTON, SHAFT BOLT) - XC30 A1-A3/30 SILVER A1-A2
	SPARES	
10	11.4307.469.000	FORK BRAKE POST KIT - STEEL (QTY 2)
11	11.4018.028.006	FORK DUST WIPER KIT - 30MM BLACK (INCLUDES FLANGED DUST WIPERS & 5MM FOAM RINGS) - XC30/30GOLD/30 SILVER/PARAGON
12	11.4015.534.010	FORK HOSE CLAMP - PIKE/LYRIK/YARI/SID/REVELATION/BOXXER/XC30/30G/30S/RECON/SEKTOR/BLUTO/REBA/35G/35S
13	11.4310.465.000	FORK SHAFT FASTENER KIT - (INCLUDES SHAFT BOLTS & CRUSH WASHERS)
bulk	11.4015.259.000	FORK CRUSH WASHERS - 8MM (QTY 50)
bulk	11.4015.260.000	FORK CRUSH WASHER RETAINER - 8MM (QTY 50)
bulk	11.4018.028.007	FORK DUST WIPER KIT - 30MM BLACK (INCLUDES FLANGED DUST WIPERS) (QTY 20) - XC30/30 GOLD/30 SILVER/PARAGON
bulk	11.4018.028.008	FORK FOAM RING KIT - 30MM X 5MM (QTY 20) - XC30/30 GOLD/30 SILVER
	TOOLS/GREASE/FLUIDS	
ns	00.4318.030.000	FORK LOWER LEG DUST SEAL INSTALLATION TOOL 30MM (FOR FLANGELESS AND FLANGED DUST SEALS)
ns	00.4315.023.010	HIGH-PRESSURE FORK/SHOCK PUMP (300 PSI MAX) ROCKSHOX
ns	00.4315.022.010	REAR SHOCK SCHRADER VALVE REMOVAL TOOL ROCKSHOX
ns	11.4315.021.020	ROCKSHOX SUSPENSION OIL, 5WT, 120ML BOTTLE - FORK DAMPER
ns	11.4015.354.010	ROCKSHOX SUSPENSION OIL, 5WT, 1 LITER BOTTLE - FORK DAMPER
ns	11.4315.021.040	ROCKSHOX SUSPENSION OIL, 15WT, 120ML BOTTLE - LOWER LEGS
ns	11.4015.354.030	ROCKSHOX SUSPENSION OIL, 15WT, 1 LITER BOTTLE - LOWER LEGS
ns	00.4318.008.000	GREASE SRAM BUTTER 20ML SYRINGE, FRICTION REDUCING GREASE BYSLICKOLEUM - DOUBLE TIME HUB PAWLS, FORKS & REVERB SERVICE
ns	00.4318.008.001	GREASE SRAM BUTTER 1OZ CONTAINER, FRICTION REDUCING GREASE BY SLICKOLEUM - DOUBLE TIME HUB PAWLS, FORKS & REVERB SERVICE

30 GOLD TK/RL A1-A2 (2016-2020)

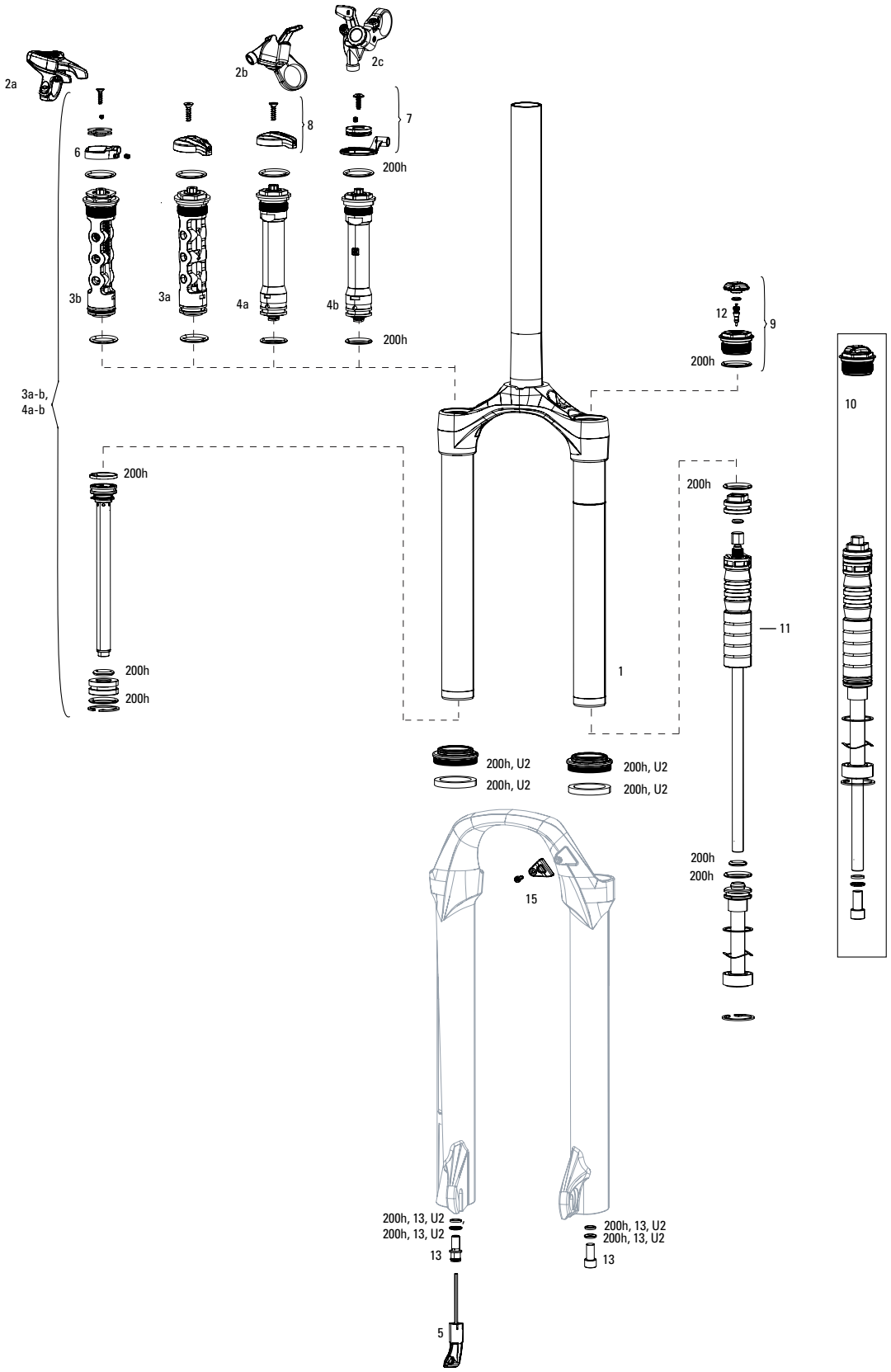

Note:

1. 200H service kits include replaceable o-rings, glide rings, crush washers, crush washer retainers and wiper seals.
2. Decal and Maxle pages can be found in back of the catalog.

30 GOLD TK/RL A1-A2 (2016-2020)

	UPGRADES	
U	00.4318.002.014	REMOTE UPGRADE KIT - ONELOC RIGHT/ABOVE, LEFT/BELOW 10MM MCRL DAMPER PUSH TO CLOSE (INCLUDES REMOTE, COMP DAMPER, CABLE&HOUSING)-30 GOLD(2014 -2017)
U2	00.4318.045.000	FORK DUST WIPER UPGRADE KIT - 30MM BLACK FLANGED LOW FRICTION SEALS (INCLUDES DUST WIPERS, 5MM & 10MM FOAM RINGS) - XC30/30GOLD/30SILVER/PARAGON/PSYLO/DUKE
	SERVICE	
200h	00.4315.032.649	200 HOUR/1 YEAR SERVICE KIT (INCLUDES DUST SEALS, FOAM RINGS, O-RING SEALS) - 30 GOLD AND SILVER (2018+)
	SERVICE	
1	11.4018.008.554	FORK CSU - SOLO AIR 26 40 OFF-SET ALUMINUM 1 1/8" BLACK (NO GRADIENTS) FAST BLACK - 30 GOLD TK A1 (2014+)/RL A1 (2018+)/JUDY GOLD TK/RL A1+ (2018+)
1	11.4018.008.555	FORK CSU - SOLO AIR 27 42 OFF-SET ALUMINUM 1 1/8" BLACK (NO GRADIENTS) FAST BLACK - 30 GOLD TK A1 (2014+)/RL A1 (2018+)/JUDY GOLD TK/RL A1+ (2018+)
1	11.4018.008.556	FORK CSU - SOLO AIR 29 46 OFF-SET ALUMINUM 1 1/8" BLACK (NO GRADIENTS) FAST BLACK - 30 GOLD TK A1 (2014+)/RL A1 (2018+)/JUDY GOLD TK/RL A1+ (2018+)
1	11.4018.008.557	FORK CSU - SOLO AIR 29 51 OFF-SET ALUMINUM 1 1/8" BLACK (NO GRADIENTS) FAST BLACK - 30 GOLD TK A1 (2014+)/RL A1 (2018+)/JUDY GOLD TK/RL A1+ (2018+)
1	11.4018.008.558	FORK CSU - SOLO AIR 29 46 OFF-SET ALUMINUM TAPER BLACK (NO GRADIENTS) FAST BLACK - 30 GOLD TK A1 (2014+)/RL A1 (2018+)/JUDY GOLD TK/RL A1+ (2018+)
1	11.4018.008.559	FORK CSU - SOLO AIR 29 51 OFF-SET ALUMINUM TAPER BLACK (NO GRADIENTS) FAST BLACK - 30 GOLD TK A1 (2014+)/RL A1 (2018+)/JUDY GOLD TK/RL A1+ (2018+)
	DAMPER INTERNALS AND ONELOC	
2a	00.4318.002.009	REMOTE - ONELOC LEFT/ABOVE, RIGHT/BELOW 10MM, REMOTE ONLY (INCLUDES REMOTE, CABLE&HOUSING)-SID,REBA,REVELATION,BLUTO,SEKTOR,RECONGOLD(2013-2017)/JUDY
2a	00.4318.002.010	REMOTE - ONELOC RIGHT/ABOVE, LEFT/BELOW 10MM, REMOTE ONLY (INCLUDES REMOTE, CABLE&HOUSING)-SID,REBA,REVELATION,BLUTO,SEKTOR,RECONGOLD(2013-2017)/JUDY
	11.4015.544.400	FORK COMPRESSION DAMPER - REMOTE 10mm, 26 (2013+ PUSHLOC, ONELOC, TWISTLOC) MOCO RL (INCLUDES SPOOL, CABLE CLAMP & SCREW) - 30 GOLD A1+ (2018-2020)/JUDY GOLD A1+ (2018+)
3a	11.4018.009.096	FORK DAMPER ASSEMBLY - CROWN RL , 26 (THREAD PITCH 1.0MM) (INCLUDES RIGHT SIDE INTERNALS) - 30 GOLD A1+ (2018-2020)/JUDY GOLD A1+ (2018+)
3a	11.4018.009.094	FORK DAMPER ASSEMBLY - CROWN RL, 27.5/29 (THREAD PITCH 1.0MM) (INCLUDES RIGHT SIDE INTERNALS) - 30 GOLD A1+ (2018-2020)/JUDY GOLD A1+ (2018+)
3b	11.4018.009.095	FORK DAMPER ASSEMBLY - REMOTE 10MM, 27.5/29 (2013+ PUSHLOC, ONELOC, TWISTLOC) RL (THREAD PITCH 1.0MM) (RIGHT SIDE INTERNALS) - 30 GOLD A1+ (2018-2020)/JUDY GOLD A1+ (2018+)
3b	11.4018.009.097	FORK DAMPER ASSEMBLY - REMOTE 10MM, 26 (2013+ PUSHLOC, ONELOC, TWISTLOC) MOCO RL (THREAD PITCH 1.0MM) (INCLUDES RIGHT SIDE INTERNALS)- 30 GOLD A1+ (2018-2020)/JUDY GOLD A1+ (2018+)
	17MM POPLOC AND PUSHLOC	
2b	11.4308.848.000	REMOTE - POPLOC LEFT 17MM CABLE PULL - RL (PRE-2013) & ALL TK DAMPERS, (NOT COMPATIBLE WITH 2013+ MOCO)
2b	11.4309.207.000	REMOTE - POPLOC RIGHT 17MM CABLE PULL - RL (PRE-2013) & ALL TK DAMPERS
2c	11.4308.849.000	REMOTE - POPLOC LEFT ADJUSTABLE 17MM CABLE PULL (NOT COMPATIBLE WITH 2013+ MOCO RL) - RL (PRE-2013) & TK DAMPERS
2c	11.4309.208.000	REMOTE - POPLOC RIGHT ADJUSTABLE 17MM CABLE PULL (NOT COMPATIBLE WITH 2013+ MOCO RL) - RL (PRE-2013) & TK DAMPERS
4a	11.4018.009.040	FORK DAMPER ASSEMBLY - CROWN TURNKEY 26,27.5,29 80-100MM (INCLUDES RIGHT SIDE INTERNALS) - 30 GOLDA1
4a	11.4018.009.042	FORK DAMPER ASSEMBLY - CROWN TURNKEY (INCLUDES RIGHT SIDE INTERNALS) - 30 GOLD 27.5,29 120 A1
4b	11.4018.009.041	FORK DAMPER ASSEMBLY - REMOTE 17MM (POPLOC, PRE-2013 PUSHLOC) 26/27.5/29 80-100MM (INCLUDES RIGHT SIDE INTERNALS) - 30 GOLD A1
4b	11.4018.009.043	FORK DAMPER ASSEMBLY - REMOTE 17MM (POPLOC, PRE-2013 PUSHLOC) 26/27.5/29 80-100MM (INCLUDES RIGHT SIDE INTERNALS) - 30 GOLD A1
5	11.4018.033.002	FORK REBOUND DAMPER KNOB KIT - (INCLUDES ADJUSTER KNOB) 29" - XC30A1-A3/30 GOLD A1+/JUDY GOLD A1+/30 SILVER A1, SEKTOR SILVER A1+/RECON A1+
6	11.4018.082.028	FORK COMPRESSION DAMPER SPARE HOUSING STOP - FITS TK AND RL REMOTE DAMPERS (INCLUDES HOUSING STOP AND SET SCREW) - JUDY/RECON/30/35 (2020-2021)
7	11.4015.536.010	FORK COMPRESSION DAMPER KNOB KIT - REMOTE 17mm (POPLOC, PRE-2013 PUSHLOC) (INCLUDES SPOOL & CLAMP)- XC30/30 GOLD/30 SILVER/JUDY SILVER (NonBoost)/JUDY B1/JUDY GOLD (NonBoost)
8	11.4015.461.050	FORK COMPRESSION DAMPER KNOB KIT - CROWN TURNKEY - RECON/SEKTOR/30 GOLD/30 SILVER/XC32/XC30 A1-A3
	SPRING INTERNALS	
9	11.4018.012.005	FORK SPRING AIR TOP CAP - 30MM (1.0MM THREAD PITCH) - 30 GOLD A1+ (2015-2019)/JUDY GOLD TK/RL A1+ (2018+)
10	11.4018.010.100	FORK SPRING SOLO AIR ASSEMBLY - 100MM-26 (INCLUDES TOP CAP, AIR PISTON, SHAFT BOLT) - 30 GOLD A1/JUDY GOLD TK/RL A1+ (2018+)
10	11.4018.010.102	FORK SPRING SOLO AIR ASSEMBLY - 100MM-27.5/29 (INCLUDES TOP CAP, AIR PISTON, SHAFT BOLT) - 30 GOLD A1/JUDY GOLD TK/RL A1+ (2018+)
10	11.4018.010.103	FORK SPRING SOLO AIR ASSEMBLY - 120MM-27.5/29 (INCLUDES TOP CAP, AIR PISTON, SHAFT BOLT) - 30 GOLD A1/JUDY GOLD TK/RL A1+ (2018+)
11	11.4018.034.000	FORK SPRING TRAVEL SPACERS - SOLO AIR (USED TO CHANGE TRAVEL) - RECON/RECON BOOST, 30 GOLD/SILVER, XC 32/30, PARAGON, SEKTOR SILVER, 35G/JUDY G
12	11.4308.327.002	AIR VALVE KIT - SCHRADER CORE (QTY 2) - FORKS/SHOCKS/REVERB
	SPARES	
13	11.4310.465.000	FORK SHAFT FASTENER KIT - (INCLUDES SHAFT BOLTS & CRUSH WASHERS)
bulk	11.4015.259.000	FORK CRUSH WASHERS - 8MM (QTY 50)
bulk	11.4015.260.000	FORK CRUSH WASHER RETAINER - 8MM (QTY 50)
14	11.4018.028.008	FORK FOAM RING KIT - 30MM X 5MM (QTY 20) - XC30/30 GOLD/30 SILVER
15	11.4015.534.010	FORK HOSE CLAMP - PIKE/LYRIK/YARI/SID/REVELATION/BOXXER/XC30/30G/30S/RECON/SEKTOR/BLUTO/REBA/35G/35S
	TOOLS/GREASE/FLUIDS	
ns	00.4318.030.000	FORK LOWER LEG DUST SEAL INSTALLATION TOOL 30MM (FOR FLANGELESS AND FLANGED DUST SEALS)
ns	00.4315.023.010	HIGH-PRESSURE FORK/SHOCK PUMP (300 PSI MAX) ROCKSHOX
ns	00.4315.022.010	REAR SHOCK SCHRADER VALVE REMOVAL TOOL ROCKSHOX
ns	11.4315.021.020	ROCKSHOX SUSPENSION OIL, 5WT, 120ML BOTTLE - FORK DAMPER
ns	11.4015.354.010	ROCKSHOX SUSPENSION OIL, 5WT, 1 LITER BOTTLE - FORK DAMPER
ns	11.4315.021.040	ROCKSHOX SUSPENSION OIL, 15WT, 120ML BOTTLE - LOWER LEGS
ns	11.4015.354.030	ROCKSHOX SUSPENSION OIL, 15WT, 1 LITER BOTTLE - LOWER LEGS
ns	00.4318.008.000	GREASE SRAM BUTTER 20ML SYRINGE, FRICTION REDUCING GREASE BYSLICKOLEUM - DOUBLE TIME HUB PAWLS, FORKS & REVERB SERVICE
ns	00.4318.008.001	GREASE SRAM BUTTER 1OZ CONTAINER, FRICTION REDUCING GREASE BY SLICKOLEUM - DOUBLE TIME HUB PAWLS, FORKS & REVERB SERVICE

JUDY TK B1 (2021)

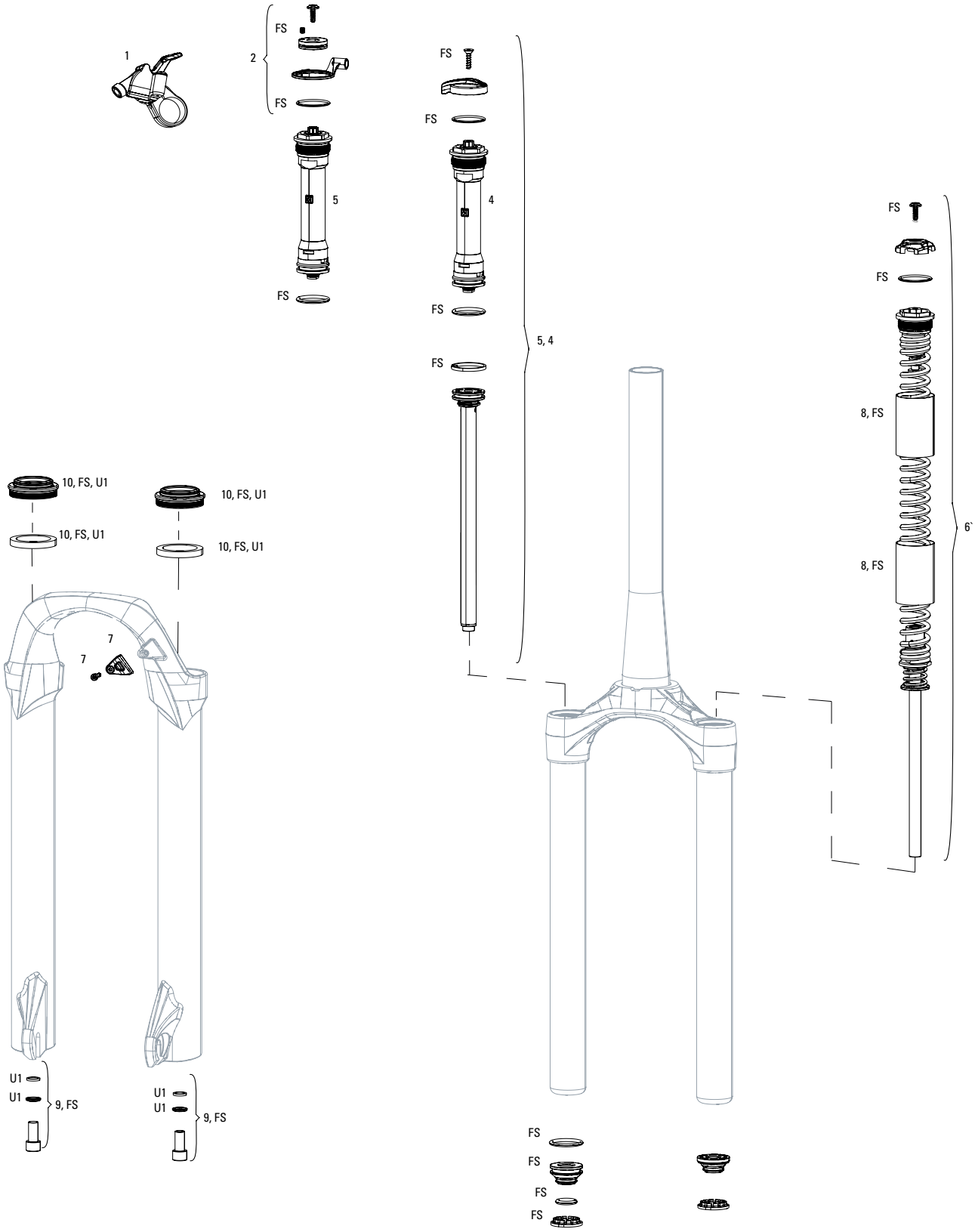

Note:
1. Full service kits include replaceable o-rings, glide rings, retaining rings, crush washers, crush washer retainers and shaft bolts/nuts. Not all service parts are pictured. All basic service kits include the following replaceable wear items: o-rings, glide rings, dust seals, and foam rings.

JUDY TK B1 (2021)

	UPGRADES	
U1	00.4318.045.000	FORK DUST WIPER UPGRADE KIT - 30MM BLACK FLANGED LOW FRICTION SEALS (INCLUDES DUST WIPERS, 5MM & 10MM FOAM RINGS) - XC30/30GOLD/30SILVER/PARAGON/PSYLO/DUKE
	SERVICE	
FS	11.4015.539.030	FORK SERVICE KIT - FULL SERVICE COIL - XC30 B1, JUDY TK B1
	DAMPER INTERNALS	
1	11.4308.848.000	REMOTE - POPLOC LEFT 17MM CABLE PULL - RL (PRE-2013) & ALL TK DAMPERS, (NOT COMPATIBLE WITH 2013+ MOCO)
1	11.4308.849.000	REMOTE - POPLOC LEFT ADJUSTABLE 17MM CABLE PULL (NOT COMPATIBLE WITH 2013+ MOCO RL) - RL (PRE-2013) & TK DAMPERS
1	11.4309.207.000	REMOTE - POPLOC RIGHT 17MM CABLE PULL - RL (PRE-2013) & ALL TK DAMPERS
1	11.4309.208.000	REMOTE - POPLOC RIGHT ADJUSTABLE 17MM CABLE PULL (NOT COMPATIBLE WITH 2013+ MOCO RL) - RL (PRE-2013) & TK DAMPERS
2	11.4015.536.010	FORK COMPRESSION DAMPER KNOB KIT - REMOTE 17mm (POPLOC, PRE-2013 PUSHLOC) (INCLUDES SPOOL & CLAMP)- XC30/30 GOLD/30 SILVER/JUDY SILVER (NonBoost)/JUDY B1/JUDY GOLD (NonBoost)
4	11.4018.104.006	FORK DAMPER ASSEMBLY - CROWN TURNKEY COIL 27.5/29 80/100 CROWN ADJUST, 0.8MM THREAD (INCLUDES RIGHT SIDE INTERNALS) - XC30 B3-B4 (2018-2020)/JUDY TK B1 (2021)
5	11.4018.104.007	FORK DAMPER ASSEMBLY - REMOTE 17MM (POPLOC, PRE-2013 PUSHLOC) TURNKEY COIL, 0.8MM THREAD 27.5/29 80/100 (INCLUDES RIGHT SIDE INTERNALS) - XC30 B3-B4 (2018-2020)/JUDY TK B1 (2021)
	SPRING	
6	11.4018.010.161	FORK SPRING COIL - X-SOFT (SILVER) 100MM-27.5/29 - XC30 B1-B4 (2016- 2019)/JUDY TK B1 (2021)
6	11.4018.010.165	FORK SPRING COIL - X-FIRM (BLACK) 100MM-27.5/29 - XC30 B1-B4 (2016- 2019)/JUDY TK B1 (2021)
6	11.4018.010.166	FORK SPRING COIL - X-SOFT (SILVER) 120MM-27.5/29 - XC30 B1-B4 (2016- 2019)/JUDY TK B1 (2021)
	SPARES	
7	11.4015.534.010	FORK HOSE CLAMP - PIKE/LYRIK/YARI/SID/REVELATION/BOXXER/XC30/30G/30S/RECON/SEKTOR/BLUTO/REBA/35G/35S
8	11.4309.336.000	FORK SPRING COIL ISOLATOR KIT - (INCLUDES 3 HEAT-SHRINK COIL TUBES) REDUCES NOISE AND CHATTER
9	11.4310.465.000	FORK SHAFT FASTENER KIT - (INCLUDES SHAFT BOLTS & CRUSH WASHERS)
bulk	11.4015.259.000	FORK CRUSH WASHERS - 8MM (QTY 50)
bulk	11.4015.260.000	FORK CRUSH WASHER RETAINER - 8MM (QTY 50)
10	11.4018.028.006	FORK DUST WIPER KIT - 30MM BLACK (INCLUDES FLANGED DUST WIPERS & 5MM FOAM RINGS) - XC30/30GOLD/30 SILVER/PARAGON
bulk	11.4018.028.007	FORK DUST WIPER KIT - 30MM BLACK (INCLUDES FLANGED DUST WIPERS) (QTY 20) - XC30/30 GOLD/30 SILVER/PARAGON
bulk	11.4018.028.008	FORK FOAM RING KIT - 30MM X 5MM (QTY 20) - XC30/30 GOLD/30 SILVER
	TOOLS & GREASE	
ns	00.4318.030.000	FORK LOWER LEG DUST SEAL INSTALLATION TOOL 30MM (FOR FLANGELESS AND FLANGED DUST SEALS)
ns	11.4315.021.020	ROCKSHOX SUSPENSION OIL, 5WT, 120ML BOTTLE - FORK DAMPER
ns	11.4015.354.010	ROCKSHOX SUSPENSION OIL, 5WT, 1 LITER BOTTLE - FORK DAMPER
ns	11.4315.021.040	ROCKSHOX SUSPENSION OIL, 15WT, 120ML BOTTLE - LOWER LEGS
ns	11.4015.354.030	ROCKSHOX SUSPENSION OIL, 15WT, 1 LITER BOTTLE - LOWER LEGS
ns	00.4318.008.000	GREASE SRAM BUTTER 20ML SYRINGE, FRICTION REDUCING GREASE BYSLICKOLEUM - DOUBLE TIME HUB PAWLS, FORKS & REVERB SERVICE
ns	00.4318.008.001	GREASE SRAM BUTTER 1OZ CONTAINER, FRICTION REDUCING GREASE BY SLICKOLEUM - DOUBLE TIME HUB PAWLS, FORKS & REVERB SERVICE

JUDY SILVER TK A1-A3 (2018-2021)

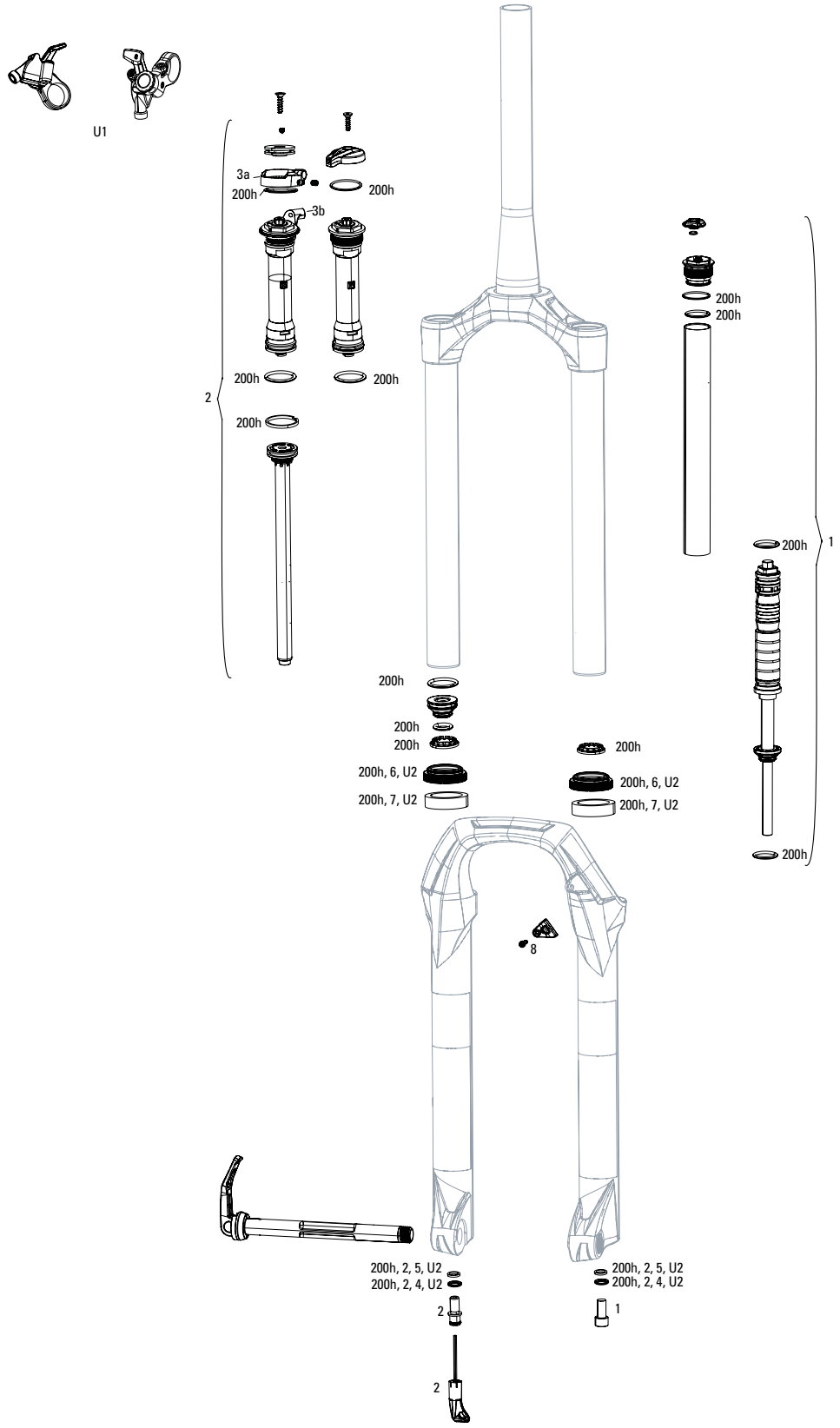

Note:
1. Judy Silver and Gold dampers and spring internals are not cross compatible.
2. Decal and Maxle pages can be found in back of the catalog.

JUDY SILVER TK A1-A3 (2018-2021)

	UPGRADES	
U2	00.4318.045.001	FORK DUST WIPER UPGRADE KIT - 30MM BLACK FLANGELESS LOW FRICTION SEALS (INCLUDES DUST WIPERS & 10MM FOAM RINGS) - JUDY SILVER/JUDY GOLD (BOOST™ FORKS)
	SERVICE	
200h	00.4315.032.648	200 HOUR/1 YEAR SERVICE KIT (INCLUDES DUST SEALS, FOAM RINGS, O-RING SEALS) -JUDY GOLD AND SILVER A1+ (2018+)
	SPRING INTERNALS	
1	11.4018.010.231	FORK SPRING SOLO AIR ASSEMBLY - 80-120 MM-27.5/29 (THREAD PITCH 0.8MM) (INCLUDES TOP CAP, AIR PISTON, SHAFT BOLT) - JUDY SILVER A1/ 30 SILVER A3(2018+)
	DAMPER INTERNALS	
U1	11.4308.848.000	REMOTE - POPLOC LEFT 17MM CABLE PULL - RL (PRE-2013) & ALL TK DAMPERS, (NOT COMPATIBLE WITH 2013+ MOCO)
U1	11.4309.207.000	REMOTE - POPLOC RIGHT 17MM CABLE PULL - RL (PRE-2013) & ALL TK DAMPERS
ns	11.4308.849.000	REMOTE - POPLOC LEFT ADJUSTABLE 17MM CABLE PULL (NOT COMPATIBLE WITH 2013+ MOCO RL) - RL (PRE-2013) & TK DAMPERS
ns	11.4309.208.000	REMOTE - POPLOC RIGHT ADJUSTABLE 17MM CABLE PULL (NOT COMPATIBLE WITH 2013+ MOCO RL) - RL (PRE-2013) & TK DAMPERS
2	11.4018.009.098	FORK DAMPER ASSEMBLY - CROWN TURNKEY (THREAD PITCH 0.8MM) (INCLUDES RIGHT SIDE INTERNALS) - 26" - JUDY SILVER A1+/ 30 SILVER A3+ (2018+)
2	11.4018.009.099	FORK DAMPER ASSEMBLY - REMOTE 17MM (POPLOC, PRE-2013 PUSHLOC) TURNKEY (THREAD PITCH 0.8MM) (INCLUDES RIGHT SIDE INTERNALS) - 26" - JUDY SILVER A1+/30 SILVER A3+ (2018+)
2	11.4018.104.017	FORK DAMPER ASSEMBLY - CROWN TURNKEY (THREAD PITCH 0.8MM) (INCLUDES RIGHT SIDE INTERNALS) - 27"/29" - JUDY SILVER A1+/ 30 SILVER A3+ (2018+)
2	11.4018.104.018	FORK DAMPER ASSEMBLY - REMOTE 17MM (POPLOC, PRE-2013 PUSHLOC) TURNKEY (THREAD PITCH 0.8MM) (INCLUDES RIGHT SIDE INTERNALS) - 27"/29" - JUDY SILVER A1+/30 SILVER A3+ (2018+)
3a	11.4018.082.028	FORK COMPRESSION DAMPER SPARE HOUSING STOP - FITS TK AND RL REMOTE DAMPERS (INCLUDES HOUSING STOP AND SET SCREW) - JUDY/RECON/30/35 (2020-2021)
3b	11.4015.536.010	FORK COMPRESSION DAMPER KNOB KIT - REMOTE 17mm (POPLOC, PRE-2013 PUSHLOC) (INCLUDES SPOOL & CLAMP)- XC30/30 GOLD/30 SILVER/JUDY SILVER (NonBoost)/JUDY B1/JUDY GOLD (Non Boost)
	SPARES	
4	11.4015.259.000	FORK CRUSH WASHERS - 8MM (QTY 50)
5	11.4015.260.000	FORK CRUSH WASHER RETAINER - 8MM (QTY 50)
6	11.4018.028.007	FORK DUST WIPER KIT - 30MM BLACK (INCLUDES FLANGED DUST WIPERS) (QTY 20) - XC30/30 GOLD/30 SILVER/PARAGON
7	11.4018.028.008	FORK FOAM RING KIT - 30MM X 5MM (QTY 20) - XC30/30 GOLD/30 SILVER
8	11.4015.534.010	FORK HOSE CLAMP - PIKE/LYRIK/YARI/SID/REVELATION/BOXXER/XC30/30G/30S/RECON/SEKTOR/BLUTO/REBA/35G/35S
	TOOLS/GREASE/FLUIDS	
ns	00.4318.030.000	FORK LOWER LEG DUST SEAL INSTALLATION TOOL 30MM (FOR FLANGELESS AND FLANGED DUST SEALS)
ns	00.4315.023.010	HIGH-PRESSURE FORK/SHOCK PUMP (300 PSI MAX) ROCKSHOX
ns	00.4315.022.010	REAR SHOCK SCHRADER VALVE REMOVAL TOOL ROCKSHOX
ns	11.4315.021.020	ROCKSHOX SUSPENSION OIL, 5WT, 120ML BOTTLE - FORK DAMPER
ns	11.4015.354.010	ROCKSHOX SUSPENSION OIL, 5WT, 1 LITER BOTTLE - FORK DAMPER
ns	11.4315.021.040	ROCKSHOX SUSPENSION OIL, 15WT, 120ML BOTTLE - LOWER LEGS
ns	11.4015.354.030	ROCKSHOX SUSPENSION OIL, 15WT, 1 LITER BOTTLE - LOWER LEGS
ns	00.4318.008.000	GREASE SRAM BUTTER 20ML SYRINGE, FRICTION REDUCING GREASE BYSLICKOLEUM - DOUBLE TIME HUB PAWLS, FORKS & REVERB SERVICE
ns	00.4318.008.001	GREASE SRAM BUTTER 1OZ CONTAINER, FRICTION REDUCING GREASE BY SLICKOLEUM - DOUBLE TIME HUB PAWLS, FORKS & REVERB SERVICE

JUDY GOLD RL A1-A3 (2018-2021)

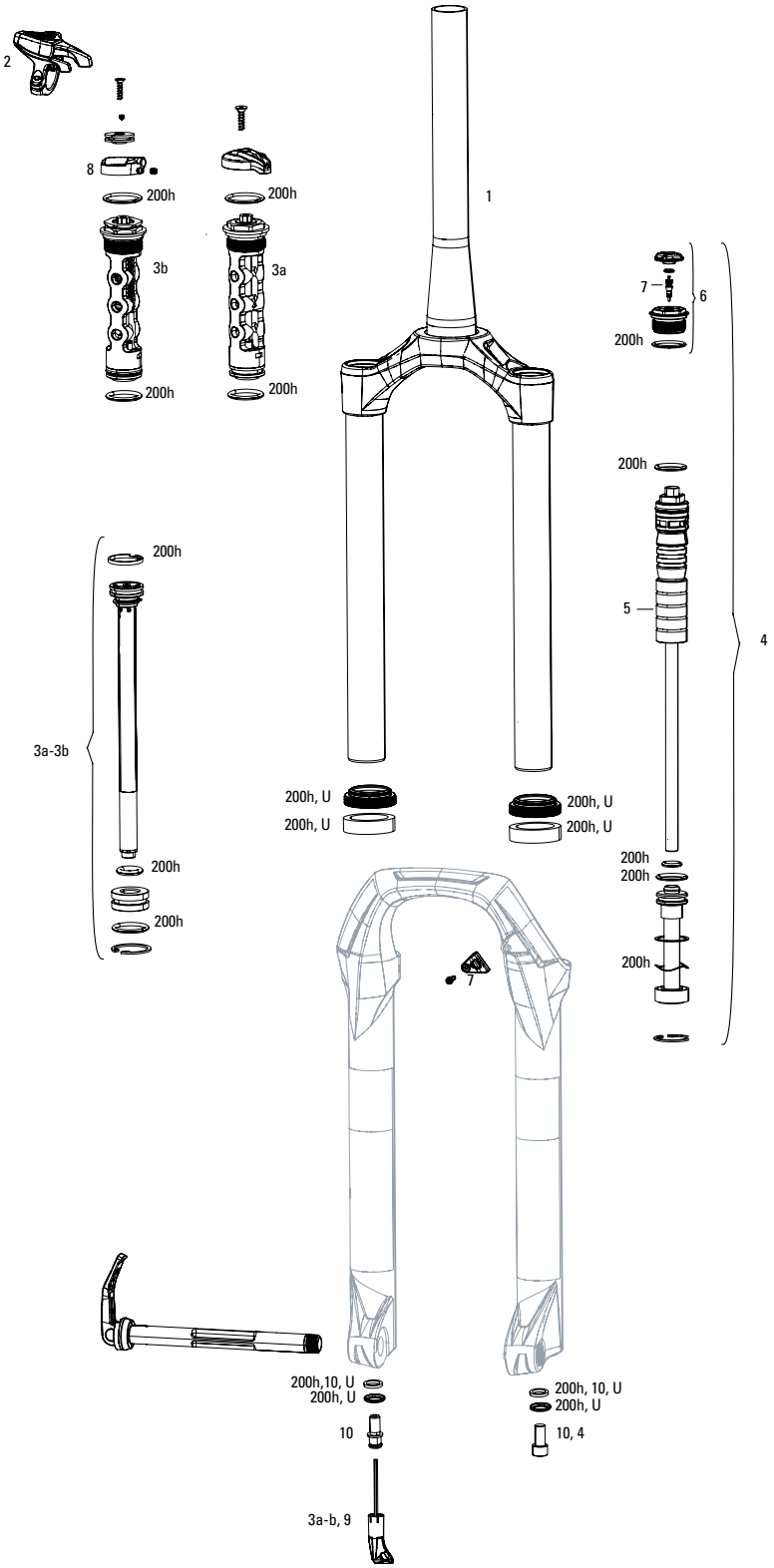

Note:

1. 200h service kits include replaceable o-rings, glide rings, retaining rings, crush washers, crush washer retainers and shaft bolts/nuts.
2. Judy Silver and Gold dampers and spring internals are not cross compatible.
3. Decal and Maxle pages can be found in back of the catalog.

JUDY GOLD RL A1-A3 (2018-2021)

	UPGRADES	
U	00.4318.045.001	FORK DUST WIPER UPGRADE KIT - 30MM BLACK FLANGELESS LOW FRICTION SEALS (INCLUDES DUST WIPERS & 10MM FOAM RINGS) - JUDY SILVER/JUDY GOLD (BOOST™ FORKS)
	SERVICE	
200h	00.4315.032.648	200 HOUR/1 YEAR SERVICE KIT (INCLUDES DUST SEALS, FOAM RINGS, O-RING SEALS) -JUDY GOLD AND SILVER A1+ (2018+)
	CSU BOOST	
1	11.4018.008.552	FORK CSU - SOLO AIR 27 BOOST™ 15X110 42OS ALUMINUM TAPER BLACK (NO GRADIENTS) FAST BLACK - JUDY GOLD A1+ (2018+)
1	11.4018.008.553	FORK CSU - SOLO AIR 2927+BOOST™ 15X110 51OS ALUMINUM TAPER BLACK (NO GRADIENTS) FAST BLACK - JUDY GOLD A1+ (2018+)
	CSU NON-BOOST	
1	11.4018.008.554	FORK CSU - SOLO AIR 26 40 OFF-SET ALUMINUM 1 1/8" BLACK (NO GRADIENTS) FAST BLACK - 30 GOLD TK A1 (2014+)/RL A1 (2018+)/JUDY GOLD TK/RL A1+ (2018+)
1	11.4018.008.555	FORK CSU - SOLO AIR 27 42 OFF-SET ALUMINUM 1 1/8" BLACK (NO GRADIENTS) FAST BLACK - 30 GOLD TK A1 (2014+)/RL A1 (2018+)/JUDY GOLD TK/RL A1+ (2018+)
1	11.4018.008.556	FORK CSU - SOLO AIR 29 46 OFF-SET ALUMINUM 1 1/8" BLACK (NO GRADIENTS) FAST BLACK - 30 GOLD TK A1 (2014+)/RL A1 (2018+)/JUDY GOLD TK/RL A1+ (2018+)
1	11.4018.008.557	FORK CSU - SOLO AIR 29 51 OFF-SET ALUMINUM 1 1/8" BLACK (NO GRADIENTS) FAST BLACK - 30 GOLD TK A1 (2014+)/RL A1 (2018+)/JUDY GOLD TK/RL A1+ (2018+)
1	11.4018.008.558	FORK CSU - SOLO AIR 29 46 OFF-SET ALUMINUM TAPER BLACK (NO GRADIENTS) FAST BLACK - 30 GOLD TK A1 (2014+)/RL A1 (2018+)/JUDY GOLD TK/RL A1+ (2018+)
1	11.4018.008.559	FORK CSU - SOLO AIR 29 51 OFF-SET ALUMINUM TAPER BLACK (NO GRADIENTS) FAST BLACK - 30 GOLD TK A1 (2014+)/RL A1 (2018+)/JUDY GOLD TK/RL A1+ (2018+)
	DAMPER INTERNALS	
2	00.4318.002.009	REMOTE - ONELOC LEFT/ABOVE, RIGHT/BELOW 10MM, REMOTE ONLY (INCLUDES REMOTE, CABLE&HOUSING)-SID,REBA,REVELATION,BLUTO,SEKTOR,RECONGOLD(2013-2017)/JUDY
2	00.4318.002.010	REMOTE - ONELOC RIGHT/ABOVE, LEFT/BELOW 10MM, REMOTE ONLY (INCLUDES REMOTE, CABLE&HOUSING)-SID,REBA,REVELATION,BLUTO,SEKTOR,RECONGOLD(2013-2017)/JUDY
3a	11.4018.009.094	FORK DAMPER ASSEMBLY - CROWN RL, 27.5/29 (THREAD PITCH 1.0MM) (INCLUDES RIGHT SIDE INTERNALS) - 30 GOLD A1+ (2018-2020)/JUDY GOLD A1+ (2018+)
3b	11.4018.009.095	FORK DAMPER ASSEMBLY - REMOTE 10MM, 27.5/29 (2013+ PUSHLOC, ONELOC, TWISTLOC) RL (THREAD PITCH 1.0MM) (RIGHT SIDE INTERNALS) - 30 GOLD A1+ (2018-2020)/JUDY GOLD A1+ (2018+)
3a	11.4018.009.096	FORK DAMPER ASSEMBLY - CROWN RL , 26 (THREAD PITCH 1.0MM) (INCLUDES RIGHT SIDE INTERNALS) - 30 GOLD A1+ (2018-2020)/JUDY GOLD A1+ (2018+)
3b	11.4018.009.097	FORK DAMPER ASSEMBLY - REMOTE 10MM, 26 (2013+ PUSHLOC, ONELOC, TWISTLOC) MOCO RL (THREAD PITCH 1.0MM) (INCLUDES RIGHT SIDE INTERNALS)- 30 GOLD A1+ (2018-2020)/JUDY GOLD A1+ (2018+)
	SPRING INTERNALS	
4	11.4018.010.101	FORK SPRING SOLO AIR ASSEMBLY - 80MM-27.5/29 (INCLUDES TOP CAP, AIR PISTON, SHAFT BOLT) - 30 GOLD A1/JUDY GOLD TK/RL A1+ (2018+)
4	11.4018.010.102	FORK SPRING SOLO AIR ASSEMBLY - 100MM-27.5/29 (INCLUDES TOP CAP, AIR PISTON, SHAFT BOLT) - 30 GOLD A1/JUDY GOLD TK/RL A1+ (2018+)
4	11.4018.010.100	FORK SPRING SOLO AIR ASSEMBLY - 100MM-26 (INCLUDES TOP CAP, AIR PISTON, SHAFT BOLT) - 30 GOLD A1/JUDY GOLD TK/RL A1+ (2018+)
4	11.4018.010.103	FORK SPRING SOLO AIR ASSEMBLY - 120MM-27.5/29 (INCLUDES TOP CAP, AIR PISTON, SHAFT BOLT) - 30 GOLD A1/JUDY GOLD TK/RL A1+ (2018+)
5	11.4018.034.000	FORK SPRING TRAVEL SPACERS - SOLO AIR (USED TO CHANGE TRAVEL) - RECON/RECON BOOST, 30 GOLD/SILVER, XC 32/30, PARAGON, SEKTOR SILVER, 35G/JUDY G
6	11.4018.012.005	FORK SPRING AIR TOP CAP - 30MM (1.0MM THREAD PITCH) - 30 GOLD A1+ (2015-2019)/JUDY GOLD TK/RL A1+ (2018+)
7	11.4308.327.002	AIR VALVE KIT - SCHRADER CORE (QTY 2) - FORKS/SHOCKS/REVERB
8	11.4018.082.028	FORK COMPRESSION DAMPER SPARE HOUSING STOP - FITS TK AND RL REMOTE DAMPERS (INCLUDES HOUSING STOP AND SET SCREW) - JUDY/RECON/30/35 (2020-2021)
ns	11.4015.536.010	FORK COMPRESSION DAMPER KNOB KIT - REMOTE 17mm (POPLOC, PRE-2013 PUSHLOC) (INCLUDES SPOOL & CLAMP)- XC30/30 GOLD/30 SILVER/JUDY SILVER (NonBoost)/JUDY B1/JUDY GOLD (NonBoost)
9	11.4018.033.002	FORK REBOUND DAMPER KNOB KIT - (INCLUDES ADJUSTER KNOB) 29" - XC30A1-A3/30 GOLD A1+/JUDY GOLD A1+/30 SILVER A1, SEKTOR SILVER A1+/RECON A1+
	SPARES	
ns	00.4318.030.000	FORK LOWER LEG DUST SEAL INSTALLATION TOOL 30MM (FOR FLANGELESS AND FLANGED DUST SEALS)
10	11.4310.465.000	FORK SHAFT FASTENER KIT - (INCLUDES SHAFT BOLTS & CRUSH WASHERS)
bulk	11.4015.259.000	FORK CRUSH WASHERS - 8MM (QTY 50)
bulk	11.4015.260.000	FORK CRUSH WASHER RETAINER - 8MM (QTY 50)
11	11.4018.028.006	FORK DUST WIPER KIT - 30MM BLACK (INCLUDES FLANGED DUST WIPERS & 5MM FOAM RINGS) - XC30/30GOLD/30 SILVER/PARAGON
bulk	11.4018.028.007	FORK DUST WIPER KIT - 30MM BLACK (INCLUDES FLANGED DUST WIPERS) (QTY 20) - XC30/30 GOLD/30 SILVER/PARAGON
bulk	11.4018.028.008	FORK FOAM RING KIT - 30MM X 5MM (QTY 20) - XC30/30 GOLD/30 SILVER
12	11.4015.534.010	FORK HOSE CLAMP - PIKE/LYRIK/YARI/SID/REVELATION/BOXXER/XC30/30G/30S/RECON/SEKTOR/BLUTO/REBA/35G/35S
	TOOLS/GREASE/FLUIDS	
ns	00.4315.023.010	HIGH-PRESSURE FORK/SHOCK PUMP (300 PSI MAX) ROCKSHOX
ns	00.4315.022.010	REAR SHOCK SCHRADER VALVE REMOVAL TOOL ROCKSHOX
ns	11.4015.354.010	ROCKSHOX SUSPENSION OIL, 5WT, 1 LITER BOTTLE - FORK DAMPER
ns	11.4315.021.040	ROCKSHOX SUSPENSION OIL, 15WT, 120ML BOTTLE - LOWER LEGS
ns	11.4015.354.030	ROCKSHOX SUSPENSION OIL, 15WT, 1 LITER BOTTLE - LOWER LEGS
ns	00.4318.008.000	GREASE SRAM BUTTER 20ML SYRINGE, FRICTION REDUCING GREASE BYSLICKOLEUM - DOUBLE TIME HUB PAWLS, FORKS & REVERB SERVICE
ns	00.4318.008.001	GREASE SRAM BUTTER 1OZ CONTAINER, FRICTION REDUCING GREASE BY SLICKOLEUM - DOUBLE TIME HUB PAWLS, FORKS & REVERB SERVICE

XC32 A1-A3 (2011-2015)

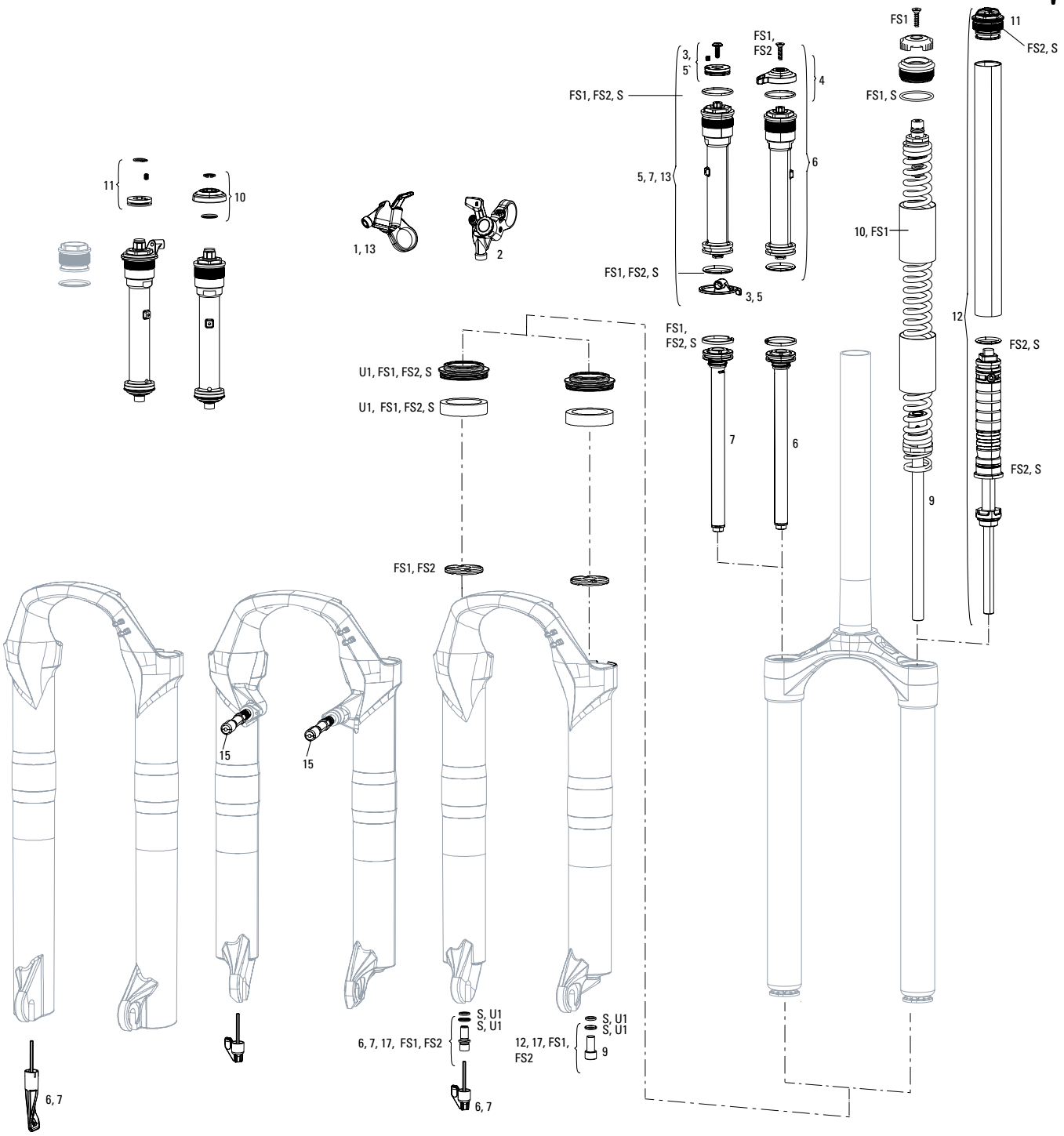

Note:

1. Full service kits include replaceable o-rings, glide rings, retaining rings, crush washers, crush washer retainers and shaft bolts/nuts. All air service kits include replacement schrader valve cores. Not all service parts are pictured. All basic service kits include the following replaceable wear items: o-rings, glide rings, dust seals, and foam rings.
2. Convert from Crown Adjust to Remote Adjust: Remote compression damper requires remote compression adjuster spool, cable clamp, and remote lever assembly.

XC32 A1-A3 (2011-2015)

UPGRADES		
U1	00.4318.045.000	FORK DUST WIPER UPGRADE KIT - 30MM BLACK FLANGED LOW FRICTION SEALS (INCLUDES DUST WIPERS, 5MM & 10MM FOAM RINGS) - XC30/30GOLD/30SILVER/PARAGON/PSYLO/DUKE
	SERVICE	
FS1	11.4015.485.000	FORK SERVICE KIT - TORA TK/XC32/RECON SILVER B1
FS2	11.4018.014.000	FORK SERVICE KIT - FULL SERVICE SOLO AIR (INCLUDES AIR SEALS, DAMPER SEALS & HARDWARE) - XC32/RECON SILVER B1
S	00.4315.032.410	AM FORK SERVICE KIT, BASIC (INCLUDES DUST SEALS, FOAM RINGS,O-RING SEALS) - XC32 SOLO AIR A3/RECON SILVER B1
	DAMPER	
1	11.4308.848.000	REMOTE - POPLOC LEFT 17MM CABLE PULL - RL (PRE-2013) & ALL TK DAMPERS, (NOT COMPATIBLE WITH 2013+ MOCO)
1	11.4309.207.000	REMOTE - POPLOC RIGHT 17MM CABLE PULL - RL (PRE-2013) & ALL TK DAMPERS
2	11.4308.849.000	REMOTE - POPLOC LEFT ADJUSTABLE 17MM CABLE PULL (NOT COMPATIBLE WITH 2013+ MOCO RL) - RL (PRE-2013) & TK DAMPERS
2	11.4309.208.000	REMOTE - POPLOC RIGHT ADJUSTABLE 17MM CABLE PULL (NOT COMPATIBLE WITH 2013+ MOCO RL) - RL (PRE-2013) & TK DAMPERS
3	11.4310.673.000	FORK COMPRESSION DAMPER KNOB KIT - CROWN & (INCLUDES, REMOTE SPOOL, CABLE CLAMP) - XC32 A1-A3 (2011-2015)/RECON SILVER A1-A3 (2011-2015)
4	11.4015.461.050	FORK COMPRESSION DAMPER KNOB KIT - CROWN TURNKEY - RECON/SEKTOR/30 GOLD/30 SILVER/XC32/XC30 A1-A3
5	11.4018.011.001	FORK COMPRESSION DAMPER KNOB KIT - REMOTE 17MM(POPLOC, PRE-2013 PUSHLOC) - XC32 A1-A3(2011-2015) /SEKTOR SILVER A1 (2014-2016)/RECON SILVER A1-B1(2013-2017)
6	11.4018.009.038	FORK DAMPER ASSEMBLY - CROWN TURNKEY 80-120MM (INCLUDES RIGHT SIDE INTERNALS) - SEKTOR SILVER/XC32/RECON SILVER B1
7	11.4018.009.039	FORK DAMPER ASSEMBLY - REMOTE 17MM (POPLOC, PRE-2013 PUSHLOC) 80-120MM (INCLUDES RIGHT SIDE INTERNALS) - SEKTOR SILVER/XC32/RECON SILVER B1
	SPRING	
9	11.4015.481.020	FORK SPRING COIL - X-SOFT (SILVER) 100MM (INCLUDES SPRING, SHAFT, SHAFT BOLT) -TORA TK (2011)/RECON SILVER B1/XC32 A1+/XC32 A1+
9	11.4015.481.140	FORK SPRING COIL - X-FIRM (BLACK) 100MM (INCLUDES SPRING, SHAFT, SHAFT BOLT) -TORA TK (2011)/RECON SILVER B1/XC32 A1+/XC32 A1+
10	11.4309.336.000	FORK SPRING COIL ISOLATOR KIT - (INCLUDES 3 HEAT-SHRINK COIL TUBES) REDUCES NOISE AND CHATTER
11	11.4018.012.000	FORK SPRING AIR TOP CAP - 32 MM (STEEL UPPER TUBES ONLY) - XC32 A1-A3/RECON SILVER TK A1-B1/ARGYLE A1-A2
12	11.4018.010.032	FORK SPRING SOLO AIR ASSEMBLY - 100MM-26/27.5/29 SOLO AIR (INCLUDES TOP CAP, AIR PISTON, SHAFT BOLT) - XC32/RECON SILVER B1
12	11.4018.010.033	FORK SPRING SOLO AIR ASSEMBLY - 110MM-26/27.5/29 SOLO AIR (INCLUDES TOP CAP, AIR PISTON, SHAFT BOLT) - XC32/RECON SILVER B1
12	11.4018.010.034	FORK SPRING SOLO AIR ASSEMBLY - 120MM-26/27.5/29 SOLO AIR (INCLUDES TOP CAP, AIR PISTON, SHAFT BOLT) - XC32/RECON SILVER B1
13	00.4318.002.007	REMOTE UPGRADE KIT - TURNKEY 17MM - INCLUDES REMOTE COMPRESSION DAMPER AND POPLOC REMOTE RIGHT 32MM SEKTOR SILVER/XC32/RECON SILVER B1
	SPARES	
15	11.4307.469.000	FORK BRAKE POST KIT - STEEL (QTY 2)
17	11.4310.465.000	FORK SHAFT FASTENER KIT - (INCLUDES SHAFT BOLTS & CRUSH WASHERS)
bulk	11.4015.259.000	FORK CRUSH WASHERS - 8MM (QTY 50)
bulk	11.4015.260.000	FORK CRUSH WASHER RETAINER - 8MM (QTY 50)
bulk	11.4310.698.000	FORK FOAM RING KIT - 32MM X 10MM (QTY 20) - REVELATION/ARGYLE/SEKTOR/TORA/RECON/XC32
	MAXLE	
ns	00.4318.005.002	AXLE MAXLE LITE FRONT, 15X100, LENGTH 148MM, THREAD LENGTH 9MM, THREAD PITCH M15X1.50 - REBA/REVELATION/RECON/SEKTOR/XC32/SID/SID SL/SID 35MM
ns	00.4318.005.018	AXLE MAXLE STEALTH FRONT, 15X100, LENGTH 148MM, THREAD LENGTH 9MM, THREAD PITCH M15X1.50 (NOT COMPATIBLE WITH RS-1) - 15X100, SID SL, SID 35MM
ns	11.4318.004.001	AXLE MAXLE - LITE 15MM XC LEVER ASSEMBLY
	TOOLS/GREASE/FLUIDS	
ns	00.4318.031.000	FORK LOWER LEG DUST SEAL INSTALLATION TOOL 32MM (FOR FLANGELESS AND FLANGED DUST SEALS)
ns	00.4315.022.010	REAR SHOCK SCHRADER VALVE REMOVAL TOOL ROCKSHOX
ns	00.4315.023.010	HIGH-PRESSURE FORK/SHOCK PUMP (300 PSI MAX) ROCKSHOX
ns	11.4315.021.020	ROCKSHOX SUSPENSION OIL, 5WT, 120ML BOTTLE - FORK DAMPER
ns	11.4015.354.010	ROCKSHOX SUSPENSION OIL, 5WT, 1 LITER BOTTLE - FORK DAMPER
ns	11.4315.021.040	ROCKSHOX SUSPENSION OIL, 15WT, 120ML BOTTLE - LOWER LEGS
ns	11.4015.354.030	ROCKSHOX SUSPENSION OIL, 15WT, 1 LITER BOTTLE - LOWER LEGS
ns	00.4318.008.000	GREASE SRAM BUTTER 20ML SYRINGE, FRICTION REDUCING GREASE BYSLICKOLEUM - DOUBLE TIME HUB PAWLS, FORKS & REVERB SERVICE
ns	00.4318.008.001	GREASE SRAM BUTTER 1OZ CONTAINER, FRICTION REDUCING GREASE BY SLICKOLEUM - DOUBLE TIME HUB PAWLS, FORKS & REVERB SERVICE

RECON TK B1/ RL B1 (2020)

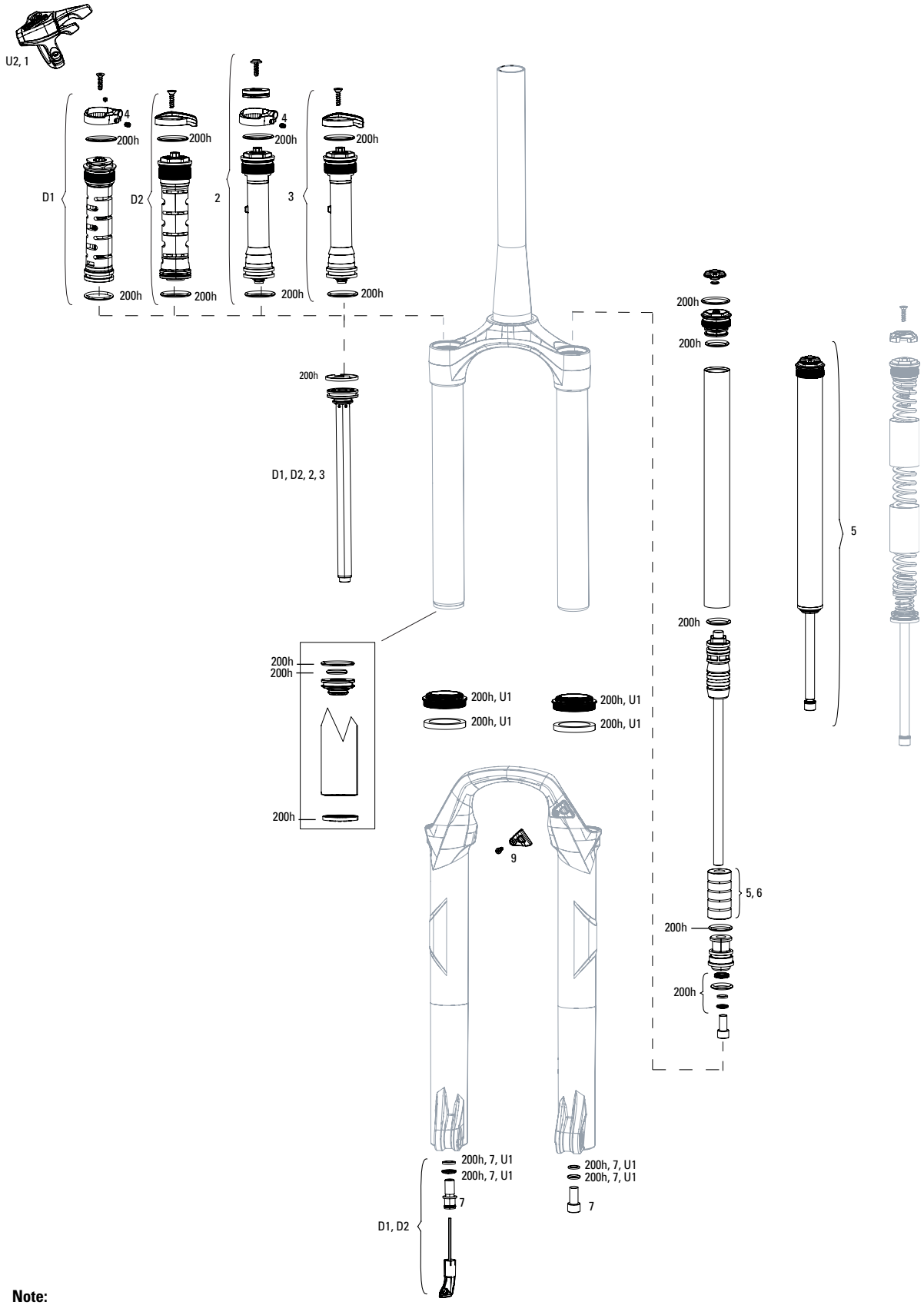

Note:

1. All basic service kits include the following replaceable wear items: o-rings, glide rings, dust seals, and foam rings.
2. Use air spring kit to upgrade and change firmness in coil forks
3. Convert from Crown Adjust to Remote Adjust: Remote compression damper requires remote compression adjuster spool, cable clamp and remote lever assembly.
4. Maximum Tire Diameter: 710mm Maximum Tire Width: 62mm
5. Recon Silver RL B1/TK B1 32mm lower legs use flangless wiper seals.

RECON TK B1/ RL B1 (2020)

	UPGRADES	
U1	00.4318.045.003	FORK DUST WIPER UPGRADE KIT - 32MM BLACK FLANGELESS ULTRA-LOW FRICTION SKF SEALS (INCLUDES DUST WIPERS & 4MM FOAM RINGS) - BLUTO/RS-1/SID B1 (2017+)/32MM BOOST™ FORKS
U2	00.4318.002.015	REMOTE UPGRADE KIT - ONELOC RIGHT/ABOVE, LEFT/BELOW 10MM MCRL DAMPER PUSH TO CLOSE (INCLUDES REMOTE, COMP DAMPER, CABLE&HOUSING)-RECONSILVERB1/ (SEKTORSILVER BOOST ONLY)(2017)
	SERVICE	
200h	00.4315.032.651	200 HOUR/1 YEAR SERVICE KIT (INCLUDES DUST SEALS, FOAM RINGS, O-RING SEALS) - SEKTOR SILVER RL A2, RECON RL/TK A1-B1 (BOOST) (2018-2020)
	REMOTE	
1	00.4318.002.009	REMOTE - ONELOC LEFT/ABOVE, RIGHT/BELOW 10MM, REMOTE ONLY (INCLUDES REMOTE, CABLE&HOUSING)-SID,REBA,REVELATION,BLUTO,SEKTOR,RECONGOLD(2013-2017)/JUDY
1	00.4318.002.010	REMOTE - ONELOC RIGHT/ABOVE, LEFT/BELOW 10MM, REMOTE ONLY (INCLUDES REMOTE, CABLE&HOUSING)-SID,REBA,REVELATION,BLUTO,SEKTOR,RECONGOLD(2013-2017)/JUDY
1	00.4318.024.000	REMOTE - TWISTLOC FULL SPRINT LEFT 10MM CABLE PULL (INCLUDES STRAIT & CURVED CABLE GUIDES, LEFT & RIGHT GRIPS) - METRIC REAR SHOCKS, RL (2013+) & CHARGER DAMPERS
1	11.4308.848.000	REMOTE - POPLOC LEFT 17MM CABLE PULL - RL (PRE-2013) & ALL TK DAMPERS, (NOT COMPATIBLE WITH 2013+ MOCO)
1	11.4308.849.000	REMOTE - POPLOC LEFT ADJUSTABLE 17MM CABLE PULL (NOT COMPATIBLE WITH 2013+ MOCO RL) - RL (PRE-2013) & TK DAMPERS
1	11.4309.207.000	REMOTE - POPLOC RIGHT 17MM CABLE PULL - RL (PRE-2013) & ALL TK DAMPERS
1	11.4309.208.000	REMOTE - POPLOC RIGHT ADJUSTABLE 17MM CABLE PULL (NOT COMPATIBLE WITH 2013+ MOCO RL) - RL (PRE-2013) & TK DAMPERS
	DAMPER INTERNALS	
D1	11.4018.104.001	FORK DAMPER ASSEMBLY - REMOTE RL 10MM (THREAD PITCH 1.0MM) 80-150MM 27.5/29 (INCLUDES RIGHT SIDE INTERNALS) - RECON BOOST TK/RL B1 (2020)
D2	11.4018.104.000	FORK DAMPER ASSEMBLY - CROWN RL (THREAD PITCH 1.0MM) 80-150MM 27.5/29 (INCLUDES RIGHT SIDE INTERNALS) - RECON BOOST TK/RL B1 (2020)
2	11.4018.009.086	FORK DAMPER ASSEMBLY - REMOTE 17MM TURNKEY 80-150MM (POPLOC, PRE-2013 PUSHLOC)(THREAD.8MM)(RIGHT SIDE INTERNALS)- RECON SILVER TK C1+ (2017-2021)/RECON TK A1+ (2018+)
3	11.4018.009.085	FORK DAMPER ASSEMBLY - CROWN TURNKEY 80-150MM (THREAD .8MM) (RIGHT SIDE INTERNALS) - RECON SILVER TK C1+ (2017-2021)/RECON TK A1+ (2018+)
4	11.4018.082.028	FORK COMPRESSION DAMPER SPARE HOUSING STOP - FITS TK AND RL REMOTE DAMPERS (INCLUDES HOUSING STOP AND SET SCREW) - JUDY/RECON/30/35 (2020-2021)
	SPRING INTERNALS - BOOST	
5	11.4018.103.003	FORK SPRING SOLO AIR ASSEMBLY - 27.5/29 SOLO AIR (INCLUDES TOP CAP, AIR PISTON, SHAFT BOLT AND ALL-TRAVEL SPACERS TO FIT 80-150MM) - RECON BOOST TK/RL B1 (2020)
6	11.4018.034.000	FORK SPRING TRAVEL SPACERS - SOLO AIR (USED TO CHANGE TRAVEL) - RECON/RECON BOOST, 30 GOLD/SILVER, XC 32/30, PARAGON, SEKTOR SILVER, 35G/JUDY G
	SPARES	
ns	00.4318.031.000	FORK LOWER LEG DUST SEAL INSTALLATION TOOL 32MM (FOR FLANGELESS AND FLANGED DUST SEALS)
7	11.4310.465.000	FORK SHAFT FASTENER KIT - (INCLUDES SHAFT BOLTS & CRUSH WASHERS)
bulk	11.4015.259.000	FORK CRUSH WASHERS - 8MM (QTY 50)
bulk	11.4015.260.000	FORK CRUSH WASHER RETAINER - 8MM (QTY 50)
8	11.4018.028.015	FORK FOAM RING KIT - 32MM X 4MM (QTY 20) - SID RLC A1/SID XX/RL B1 (2017+)/RECON BOOST RL C1/TK B1 (2020+)
9	11.4015.534.010	FORK HOSE CLAMP - PIKE/LYRIK/YARI/SID/REVELATION/BOXXER/XC30/30G/30S/RECON/SEKTOR/BLUTO/REBA/35G/35S
	TOOLS/GREASE/FLUIDS	
ns	00.4318.031.000	FORK LOWER LEG DUST SEAL INSTALLATION TOOL 32MM (FOR FLANGELESS AND FLANGED DUST SEALS)
ns	00.4315.023.010	HIGH-PRESSURE FORK/SHOCK PUMP (300 PSI MAX) ROCKSHOX
ns	00.4315.022.010	REAR SHOCK SCHRADER VALVE REMOVAL TOOL ROCKSHOX
ns	11.4315.021.020	ROCKSHOX SUSPENSION OIL, 5WT, 120ML BOTTLE - FORK DAMPER
ns	11.4015.354.010	ROCKSHOX SUSPENSION OIL, 5WT, 1 LITER BOTTLE - FORK DAMPER
ns	11.4315.021.040	ROCKSHOX SUSPENSION OIL, 15WT, 120ML BOTTLE - LOWER LEGS
ns	11.4015.354.030	ROCKSHOX SUSPENSION OIL, 15WT, 1 LITER BOTTLE - LOWER LEGS
ns	00.4318.008.000	GREASE SRAM BUTTER 20ML SYRINGE, FRICTION REDUCING GREASE BYSLICKOLEUM - DOUBLE TIME HUB PAWLS, FORKS & REVERB SERVICE
ns	00.4318.008.001	GREASE SRAM BUTTER 1OZ CONTAINER, FRICTION REDUCING GREASE BY SLICKOLEUM - DOUBLE TIME HUB PAWLS, FORKS & REVERB SERVICE

RECON TK A1-A2/RL A1-A2 (2018-2019)

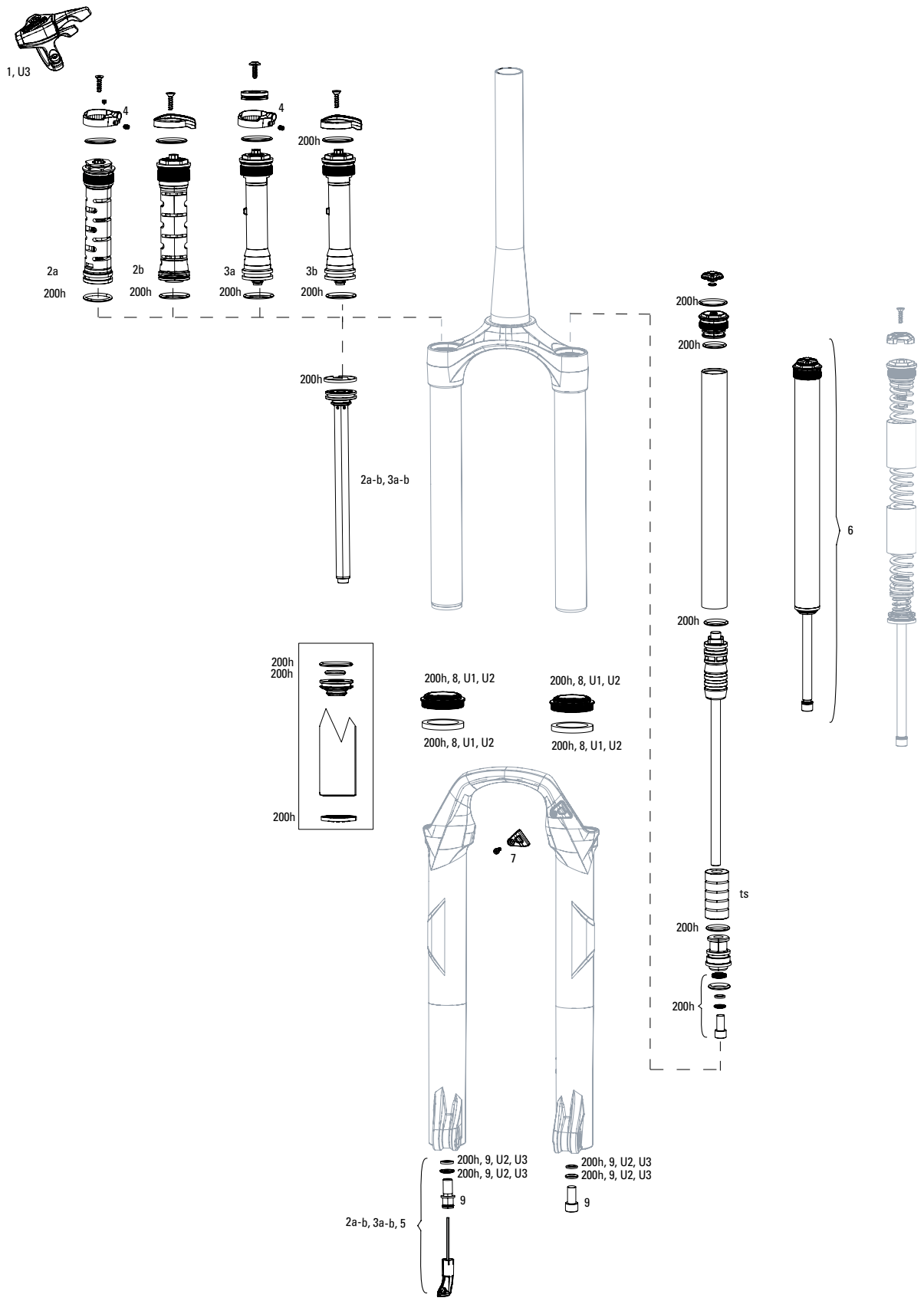

Note:

1. 200H service kits include the following replaceable wear items: o-rings, glide rings, dust seals, and foam rings.
2. Convert from Crown Adjust to Remote Adjust: Remote compression damper requires remote compression adjuster spool, cable clamp and remote lever assembly.
3. Thread Pitch is 0.8mm for Recon Silver C1 and Sektor Silver A2
4. Maximum Tire Diameter: 710mm Maximum Tire Width: 62mm
5. Recon Silver RL B1/TK C1 32mm lower legs use flangless wiper seals.

RECON TK A1-A2/RL A1-A2 (2018-2019)

	UPGRADES	
U1	00.4318.045.002	FORK DUST WIPER UPGRADE KIT - 32MM BLACK FLANGED LOW FRICTION SEALS (INCLUDES DUST WIPERS, 5MM & 10MM FOAM RINGS) - SID/REVELATION/REBA/ARGLE/SEKTOR/TORA/RECON/XC32
U2	00.4318.045.003	FORK DUST WIPER UPGRADE KIT - 32MM BLACK FLANGELESS ULTRA-LOW FRICTION SKF SEALS (INCLUDES DUST WIPERS & 4MM FOAM RINGS) - BLUTO/RS-1/SID B1 (2017+)/32MM BOOST™ FORKS
U3	00.4318.002.015	REMOTE UPGRADE KIT - ONELOC RIGHT/ABOVE, LEFT/BELOW 10MM MCRL DAMPER PUSH TO CLOSE (INCLUDES REMOTE, COMP DAMPER, CABLE&HOUSING)-RECONSILVERB1/(SEKTORSILVER BOOST ONLY)(2017)
	SERVICE	
200h	00.4315.032.650	200 HOUR/1 YEAR SERVICE KIT (INCLUDES DUST SEALS, FOAM RINGS, O-RING SEALS) - RECON RL/TK A1-A2 (NON BOOST) (2018-2020)
200h	00.4315.032.651	200 HOUR/1 YEAR SERVICE KIT (INCLUDES DUST SEALS, FOAM RINGS, O-RING SEALS) - SEKTOR SILVER RL A2, RECON RL/TK A1-B1 (BOOST) (2018-2020)
	REMOTE	
1	00.4318.002.009	REMOTE - ONELOC LEFT/ABOVE, RIGHT/BELOW 10MM, REMOTE ONLY (INCLUDES REMOTE, CABLE&HOUSING)-SID,REBA,REVELATION,BLUTO,SEKTOR,RECONGOLD(2013-2017)/JUDY
1	00.4318.002.010	REMOTE - ONELOC RIGHT/ABOVE, LEFT/BELOW 10MM, REMOTE ONLY (INCLUDES REMOTE, CABLE&HOUSING)-SID,REBA,REVELATION,BLUTO,SEKTOR,RECONGOLD(2013-2017)/JUDY
ns	11.4308.848.000	REMOTE - POPLOC LEFT 17MM CABLE PULL - RL (PRE-2013) & ALL TK DAMPERS, (NOT COMPATIBLE WITH 2013+ MOCO)
ns	11.4308.849.000	REMOTE - POPLOC LEFT ADJUSTABLE 17MM CABLE PULL (NOT COMPATIBLE WITH 2013+ MOCO RL) - RL (PRE-2013) & TK DAMPERS
ns	11.4309.207.000	REMOTE - POPLOC RIGHT 17MM CABLE PULL - RL (PRE-2013) & ALL TK DAMPERS
ns	11.4309.208.000	REMOTE - POPLOC RIGHT ADJUSTABLE 17MM CABLE PULL (NOT COMPATIBLE WITH 2013+ MOCO RL) - RL (PRE-2013) & TK DAMPERS
	DAMPER INTERNALS	
2a	11.4018.009.088	FORK DAMPER ASSEMBLY - REMOTE 10MM MOCO RL 80-120MM(2013+ PUSHLOC, ONELOC, TWISTLOC)(THREAD .8MM)(RIGHT SIDE INTERNALS)-RECON SILVER RL B1+ (2017-2021)/RECON RL A1+ (2018-2021)
2b	11.4018.009.087	FORK DAMPER ASSEMBLY - CROWN RL 80-120MM (THREAD .8MM)(RIGHT SIDE INTERNALS) - RECON SILVER RL B1+ (2017-2021)/RECON RL A1+ (2018-2021)
3a	11.4018.009.086	FORK DAMPER ASSEMBLY - REMOTE 17MM TURNKEY 80-150MM (POPLOC, PRE-2013 PUSHLOC)(THREAD.8MM)(RIGHT SIDE INTERNALS)- RECON SILVER TK C1+ (2017-2021)/RECON TK A1+ (2018+)
3b	11.4018.009.085	FORK DAMPER ASSEMBLY - CROWN TURNKEY 80-150MM (THREAD .8MM) (RIGHT SIDE INTERNALS) - RECON SILVER TK C1+ (2017-2021)/RECON TK A1+ (2018+)
4	11.4018.082.028	FORK COMPRESSION DAMPER SPARE HOUSING STOP - FITS TK AND RL REMOTE DAMPERS (INCLUDES HOUSING STOP AND SET SCREW) - JUDY/RECON/30/35 (2020-2021)
5	11.4018.033.002	FORK REBOUND DAMPER KNOB KIT - (INCLUDES ADJUSTER KNOB) 29" - XC30A1-A3/30 GOLD A1+/JUDY GOLD A1+/30 SILVER A1, SEKTOR SILVER A1+/RECON A1+
	DAMPER INTERNALS - BOOST	
2a	11.4018.009.090	FORK DAMPER ASSEMBLY - REMOTE 10MM (2013+ PUSHLOC, ONELOC, TWISTLOC) MOCO RL (.8MM) 130-150MM (RIGHT SIDE INTERNALS)- (BOOST ONLY)SEKTOR SILVER A2 (2017+)/RECON RL A1-A2 (2018+)
2b	11.4018.009.089	FORK DAMPER ASSEMBLY - CROWN RL (THREAD PITCH 0.8MM) 130-150MM (INCLUDES RIGHT SIDE INTERNALS) - (BOOST ONLY) SEKTOR SILVER A2 (2017+)/RECON RL A1-A2 (2018-2020)
	SPRING INTERNALS	
6	11.4018.010.218	FORK SPRING SOLO AIR ASSEMBLY - 80-120MM-27.5/29 (THREAD 0.8MM)(INCLUDES TOP CAP, PISTON, SHAFT BOLT, SPACERS)-RCN SILVER RL B1+/TK C1+ (2017+)/RECON RL A1-A2 (NONBOOST)(2018-2020)
6	11.4018.010.221	FORK SPRING SOLO AIR ASSEMBLY- 80-120MM-27.5/29 BOOST(THREAD 0.8MM)(INCLUDES TOP CAP, PISTON, SHAFT BOLT, SPACERS)RCN SILVER RL B1+/TK C1+ (2017+)/RECON RL A1-A2 BOOST(2018-2020)
6	11.4018.010.224	FORK SPRING SOLO AIR ASSEMBLY- 130-150MM-27.5/29 BOOST(THREAD 0.8MM)(INCLUDES TOP CAP, PISTON, SHAFT BOLT,SPACERS)RCN SILVER RL B1+/TK C1+ (2017+)/RECON RL A1-A2 BOOST(2018-2020)
ts	11.4018.034.000	FORK SPRING TRAVEL SPACERS - SOLO AIR (USED TO CHANGE TRAVEL) - RECON/RECON BOOST, 30 GOLD/SILVER, XC 32/30, PARAGON, SEKTOR SILVER, 35G/JUDY G
	SPARES	
7	11.4015.534.010	FORK HOSE CLAMP - PIKE/LYRIK/YARI/SID/REVELATION/BOXXER/XC30/30G/30S/RECON/SEKTOR/BLUTO/REBA/35G/35S
8	11.4310.695.000	FORK DUST WIPER KIT - 32MM GREY (INCLUDES FLANGED DUST WIPERS) (QTY 20) - SID/REVELATION/REBA/ARGYLE/SEKTOR/TORA/RECON/XC32
9	11.4310.465.000	FORK SHAFT FASTENER KIT - (INCLUDES SHAFT BOLTS & CRUSH WASHERS)
bulk	11.4015.259.000	FORK CRUSH WASHERS - 8MM (QTY 50)
bulk	11.4015.260.000	FORK CRUSH WASHER RETAINER - 8MM (QTY 50)
	TOOLS/GREASE/FLUIDS	
ns	00.4318.031.000	FORK LOWER LEG DUST SEAL INSTALLATION TOOL 32MM (FOR FLANGELESS AND FLANGED DUST SEALS)
ns	00.4315.023.010	HIGH-PRESSURE FORK/SHOCK PUMP (300 PSI MAX) ROCKSHOX
ns	00.4315.022.010	REAR SHOCK SCHRADER VALVE REMOVAL TOOL ROCKSHOX
ns	11.4315.021.020	ROCKSHOX SUSPENSION OIL, 5WT, 120ML BOTTLE - FORK DAMPER
ns	11.4015.354.010	ROCKSHOX SUSPENSION OIL, 5WT, 1 LITER BOTTLE - FORK DAMPER
ns	11.4315.021.040	ROCKSHOX SUSPENSION OIL, 15WT, 120ML BOTTLE - LOWER LEGS
ns	11.4015.354.030	ROCKSHOX SUSPENSION OIL, 15WT, 1 LITER BOTTLE - LOWER LEGS
ns	00.4318.008.000	GREASE SRAM BUTTER 20ML SYRINGE, FRICTION REDUCING GREASE BYSLICKOLEUM - DOUBLE TIME HUB PAWLS, FORKS & REVERB SERVICE
ns	00.4318.008.001	GREASE SRAM BUTTER 1OZ CONTAINER, FRICTION REDUCING GREASE BY SLICKOLEUM - DOUBLE TIME HUB PAWLS, FORKS & REVERB SERVICE

RECON SILVER TK D1/ RL D1 (2021)

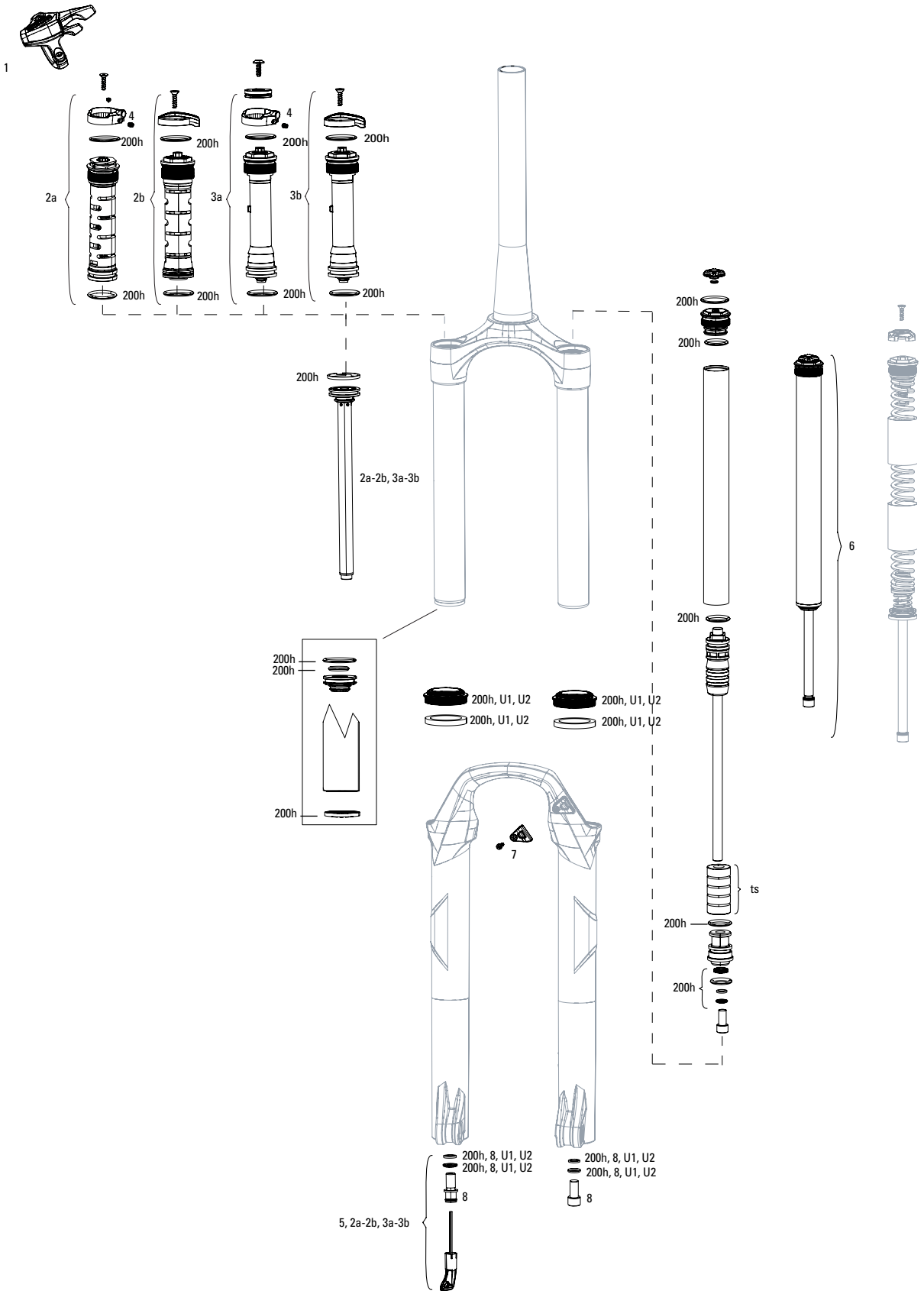

Note:

1. All 200H service kits include the following replaceable wear items: o-rings, glide rings, dust seals, and foam rings.
2. Use air spring kit to upgrade and change firmness in coil forks
3. Convert from Crown Adjust to Remote Adjust: Remote compression damper requires remote compression adjuster spool, cable clamp and remote lever assembly.

RECON SILVER TK D1/ RL D1 (2021)

	UPGRADES	
U1	00.4318.045.002	FORK DUST WIPER UPGRADE KIT - 32MM BLACK FLANGED LOW FRICTION SEALS (INCLUDES DUST WIPERS, 5MM & 10MM FOAM RINGS) - SID/REVELATION/REBA/ARGLE/SEKTOR/TORA/RECON/XC32
U2	00.4318.045.003	FORK DUST WIPER UPGRADE KIT - 32MM BLACK FLANGELESS ULTRA-LOW FRICTION SKF SEALS (INCLUDES DUST WIPERS & 4MM FOAM RINGS) - BLUTO/RS-1/SID B1 (2017+)/32MM BOOST™ FORKS
U3	00.4318.002.015	REMOTE UPGRADE KIT - ONELOC RIGHT/ABOVE, LEFT/BELOW 10MM MCRL DAMPER PUSH TO CLOSE (INCLUDES REMOTE, COMP DAMPER, CABLE&HOUSING)-RECONSILVERB1/(SEKTORSILVER BOOST ONLY)(2017)
	SERVICE	
200h	00.4315.032.626	AM FORK SERVICE KIT, BASIC (INCLUDES DUST SEALS, FOAM RINGS,O-RING SEALS) - RECON SILVER RL B1+ (NON BOOST) (2017-2021)
200h	00.4315.032.627	AM FORK SERVICE KIT, BASIC (INCLUDES DUST SEALS, FOAM RINGS,O-RING SEALS) - RECON SILVER TK C1+ (NON BOOST) (2017-2021)
200h	00.4315.032.628	AM FORK SERVICE KIT, BASIC (INCLUDES DUST SEALS, FOAM RINGS,O-RING SEALS) - RECON SILVER RL B1+ (BOOST) (2017-2021)
200h	00.4315.032.629	AM FORK SERVICE KIT, BASIC (INCLUDES DUST SEALS, FOAM RINGS,O-RING SEALS) - RECON SILVER TK C1+ (BOOST) (2017-2021)
	REMOTE	
1	00.4318.002.009	REMOTE - ONELOC LEFT/ABOVE, RIGHT/BELOW 10MM, REMOTE ONLY (INCLUDES REMOTE, CABLE&HOUSING)-SID,REBA,REVELATION,BLUTO,SEKTOR,RECONGOLD(2013-2017)/JUDY
1	00.4318.002.010	REMOTE - ONELOC RIGHT/ABOVE, LEFT/BELOW 10MM, REMOTE ONLY (INCLUDES REMOTE, CABLE&HOUSING)-SID,REBA,REVELATION,BLUTO,SEKTOR,RECONGOLD(2013-2017)/JUDY
ns	11.4308.848.000	REMOTE - POPLOC LEFT 17MM CABLE PULL - RL (PRE-2013) & ALL TK DAMPERS, (NOT COMPATIBLE WITH 2013+ MOCO)
ns	11.4308.849.000	REMOTE - POPLOC LEFT ADJUSTABLE 17MM CABLE PULL (NOT COMPATIBLE WITH 2013+ MOCO RL) - RL (PRE-2013) & TK DAMPERS
ns	11.4309.207.000	REMOTE - POPLOC RIGHT 17MM CABLE PULL - RL (PRE-2013) & ALL TK DAMPERS
ns	11.4309.208.000	REMOTE - POPLOC RIGHT ADJUSTABLE 17MM CABLE PULL (NOT COMPATIBLE WITH 2013+ MOCO RL) - RL (PRE-2013) & TK DAMPERS
	DAMPER INTERNALS	
2a	11.4018.009.088	FORK DAMPER ASSEMBLY - REMOTE 10MM MOCO RL 80-120MM(2013+ PUSHLOC, ONELOC, TWISTLOC)(THREAD .8MM)(RIGHT SIDE INTERNALS)-RECON SILVER RL B1+ (2017-2021)/RECON RL A1+ (2018-2021)
2b	11.4018.009.087	FORK DAMPER ASSEMBLY - CROWN RL 80-120MM (THREAD .8MM)(RIGHT SIDE INTERNALS) - RECON SILVER RL B1+ (2017-2021)/RECON RL A1+ (2018-2021)
3a	11.4018.009.086	FORK DAMPER ASSEMBLY - REMOTE 17MM TURNKEY 80-150MM (POPLOC, PRE-2013 PUSHLOC)(THREAD.8MM)(RIGHT SIDE INTERNALS)- RECON SILVER TK C1+ (2017-2021)/RECON TK A1+ (2018+)
3b	11.4018.009.085	FORK DAMPER ASSEMBLY - CROWN TURNKEY 80-150MM (THREAD .8MM) (RIGHT SIDE INTERNALS) - RECON SILVER TK C1+ (2017-2021)/RECON TK A1+ (2018+)
4	11.4018.082.028	FORK COMPRESSION DAMPER SPARE HOUSING STOP - FITS TK AND RL REMOTE DAMPERS (INCLUDES HOUSING STOP AND SET SCREW) - JUDY/RECON/30/35 (2020-2021)
	SPRING INTERNALS	
6	11.4018.010.218	FORK SPRING SOLO AIR ASSEMBLY - 80-120MM-27.5/29 (THREAD 0.8MM)(INCLUDES TOP CAP, PISTON, SHAFT BOLT, SPACERS)-RCN SILVER RL B1+/TK C1+ (2017+)/RECON RL A1-A2 (NONBOOST)(2018-2020)
6	11.4018.010.221	FORK SPRING SOLO AIR ASSEMBLY- 80-120MM-27.5/29 BOOST(THREAD 0.8MM)(INCLUDES TOP CAP, PISTON, SHAFT BOLT, SPACERS)RCN SILVER RL B1+/TK C1+ (2017+)/RECON RL A1-A2 BOOST(2018-2020)
6	11.4018.010.224	FORK SPRING SOLO AIR ASSEMBLY- 130-150MM-27.5/29 BOOST(THREAD 0.8MM)(INCLUDES TOP CAP, PISTON, SHAFT BOLT,SPACERS)RCN SILVER RL B1+/TK C1+ (2017+)/RECON RL A1-A2 BOOST(2018-2020)
ts	11.4018.034.000	FORK SPRING TRAVEL SPACERS - SOLO AIR (USED TO CHANGE TRAVEL) - RECON/RECON BOOST, 30 GOLD/SILVER, XC 32/30, PARAGON, SEKTOR SILVER, 35G/JUDY G
	SPARES	
7	11.4015.534.010	FORK HOSE CLAMP - PIKE/LYRIK/YARI/SID/REVELATION/BOXXER/XC30/30G/30S/RECON/SEKTOR/BLUTO/REBA/35G/35S
8	11.4310.465.000	FORK SHAFT FASTENER KIT - (INCLUDES SHAFT BOLTS & CRUSH WASHERS)
bulk	11.4015.259.000	FORK CRUSH WASHERS - 8MM (QTY 50)
bulk	11.4015.260.000	FORK CRUSH WASHER RETAINER - 8MM (QTY 50)
	TOOLS/GREASE/FLUIDS	
ns	00.4318.031.000	FORK LOWER LEG DUST SEAL INSTALLATION TOOL 32MM (FOR FLANGELESS AND FLANGED DUST SEALS)
ns	00.4315.023.010	HIGH-PRESSURE FORK/SHOCK PUMP (300 PSI MAX) ROCKSHOX
ns	00.4315.022.010	REAR SHOCK SCHRADER VALVE REMOVAL TOOL ROCKSHOX
ns	11.4315.021.020	ROCKSHOX SUSPENSION OIL, 5WT, 120ML BOTTLE - FORK DAMPER
ns	11.4015.354.010	ROCKSHOX SUSPENSION OIL, 5WT, 1 LITER BOTTLE - FORK DAMPER
ns	11.4315.021.040	ROCKSHOX SUSPENSION OIL, 15WT, 120ML BOTTLE - LOWER LEGS
ns	11.4015.354.030	ROCKSHOX SUSPENSION OIL, 15WT, 1 LITER BOTTLE - LOWER LEGS
ns	00.4318.008.000	GREASE SRAM BUTTER 20ML SYRINGE, FRICTION REDUCING GREASE BYSLICKOLEUM - DOUBLE TIME HUB PAWLS, FORKS & REVERB SERVICE
ns	00.4318.008.001	GREASE SRAM BUTTER 1OZ CONTAINER, FRICTION REDUCING GREASE BY SLICKOLEUM - DOUBLE TIME HUB PAWLS, FORKS & REVERB SERVICE

RECON SILVER TK C1/RL B1 (2017-2019)

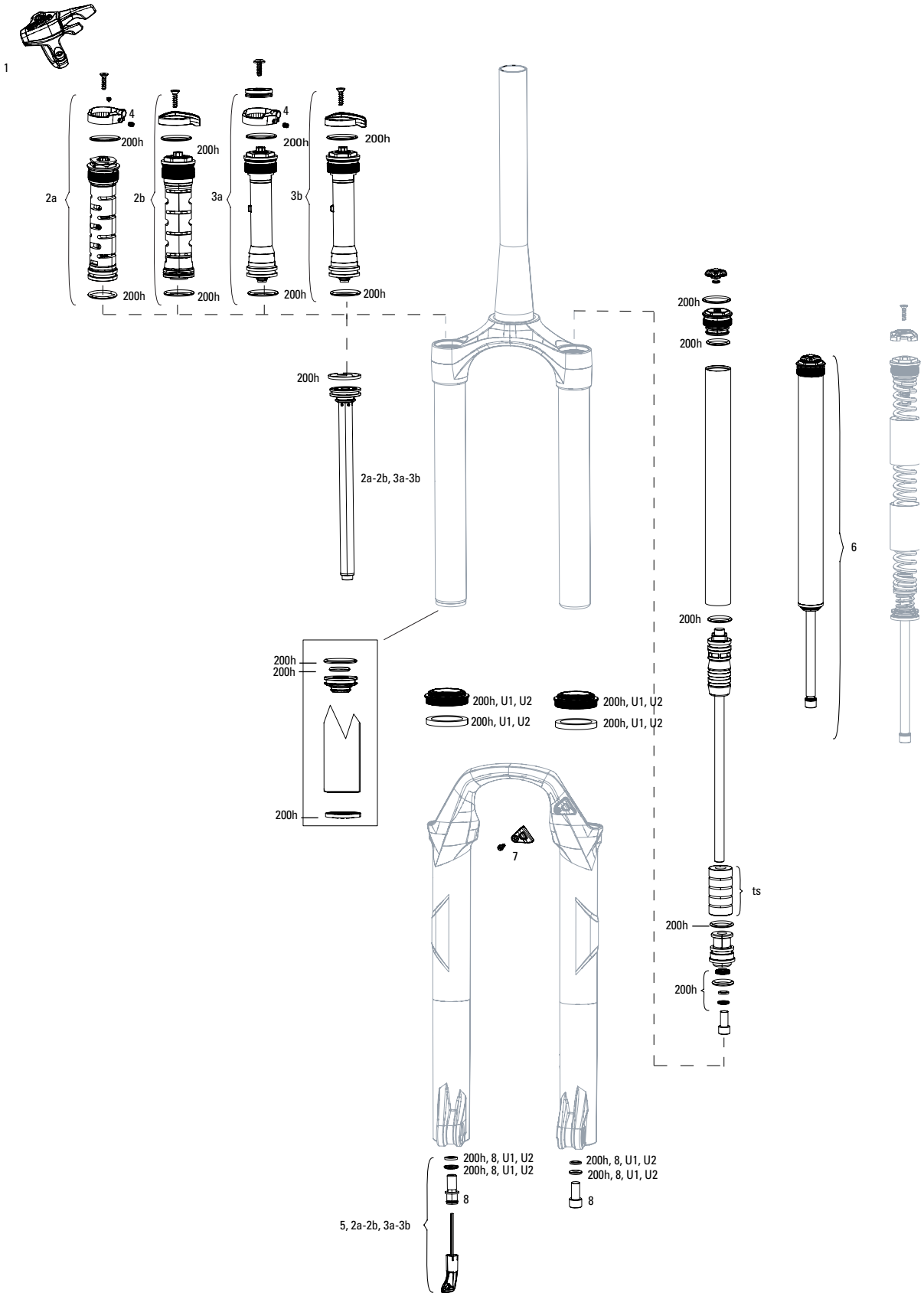

Note:

1. All 200H service kits include the following replaceable wear items: o-rings, glide rings, dust seals, and foam rings.
2. Use air spring kit to upgrade and change firmness in coil forks
3. Convert from Crown Adjust to Remote Adjust: Remote compression damper requires remote compression adjuster spool, cable clamp and remote lever assembly.

RECON SILVER TK C1/RL B1 (2017-2019)

	UPGRADES	
U1	00.4318.045.002	FORK DUST WIPER UPGRADE KIT - 32MM BLACK FLANGED LOW FRICTION SEALS (INCLUDES DUST WIPERS, 5MM & 10MM FOAM RINGS) - SID/REVELATION/REBA/ARGLE/SEKTOR/TORA/RECON/XC32
U2	00.4318.045.003	FORK DUST WIPER UPGRADE KIT - 32MM BLACK FLANGELESS ULTRA-LOW FRICTION SKF SEALS (INCLUDES DUST WIPERS & 4MM FOAM RINGS) - BLUTO/RS-1/SID B1 (2017+)/32MM BOOST™ FORKS
U3	00.4318.002.015	REMOTE UPGRADE KIT - ONELOC RIGHT/ABOVE, LEFT/BELOW 10MM MCRL DAMPER PUSH TO CLOSE (INCLUDES REMOTE, COMP DAMPER, CABLE&HOUSING)-RECONSILVERB1/(SEKTORSILVER BOOST ONLY)(2017)
	SERVICE	
200h	00.4315.032.626	AM FORK SERVICE KIT, BASIC (INCLUDES DUST SEALS, FOAM RINGS,O-RING SEALS) - RECON SILVER RL B1+ (NON BOOST) (2017-2021)
200h	00.4315.032.627	AM FORK SERVICE KIT, BASIC (INCLUDES DUST SEALS, FOAM RINGS,O-RING SEALS) - RECON SILVER TK C1+ (NON BOOST) (2017-2021)
200h	00.4315.032.628	AM FORK SERVICE KIT, BASIC (INCLUDES DUST SEALS, FOAM RINGS,O-RING SEALS) - RECON SILVER RL B1+ (BOOST) (2017-2021)
200h	00.4315.032.629	AM FORK SERVICE KIT, BASIC (INCLUDES DUST SEALS, FOAM RINGS,O-RING SEALS) - RECON SILVER TK C1+ (BOOST) (2017-2021)
	REMOTE	
1	00.4318.002.009	REMOTE - ONELOC LEFT/ABOVE, RIGHT/BELOW 10MM, REMOTE ONLY (INCLUDES REMOTE, CABLE&HOUSING)-SID,REBA,REVELATION,BLUTO,SEKTOR,RECONGOLD(2013-2017)/JUDY
1	00.4318.002.010	REMOTE - ONELOC RIGHT/ABOVE, LEFT/BELOW 10MM, REMOTE ONLY (INCLUDES REMOTE, CABLE&HOUSING)-SID,REBA,REVELATION,BLUTO,SEKTOR,RECONGOLD(2013-2017)/JUDY
ns	11.4308.848.000	REMOTE - POPLOC LEFT 17MM CABLE PULL - RL (PRE-2013) & ALL TK DAMPERS, (NOT COMPATIBLE WITH 2013+ MOCO)
ns	11.4308.849.000	REMOTE - POPLOC LEFT ADJUSTABLE 17MM CABLE PULL (NOT COMPATIBLE WITH 2013+ MOCO RL) - RL (PRE-2013) & TK DAMPERS
ns	11.4309.207.000	REMOTE - POPLOC RIGHT 17MM CABLE PULL - RL (PRE-2013) & ALL TK DAMPERS
ns	11.4309.208.000	REMOTE - POPLOC RIGHT ADJUSTABLE 17MM CABLE PULL (NOT COMPATIBLE WITH 2013+ MOCO RL) - RL (PRE-2013) & TK DAMPERS
	DAMPER INTERNALS	
2a	11.4018.009.088	FORK DAMPER ASSEMBLY - REMOTE 10MM MOCO RL 80-120MM(2013+ PUSHLOC, ONELOC, TWISTLOC)(THREAD .8MM)(RIGHT SIDE INTERNALS)-RECON SILVER RL B1+ (2017-2021)/RECON RL A1+ (2018-2021)
2b	11.4018.009.087	FORK DAMPER ASSEMBLY - CROWN RL 80-120MM (THREAD .8MM)(RIGHT SIDE INTERNALS) - RECON SILVER RL B1+ (2017-2021)/RECON RL A1+ (2018-2021)
3a	11.4018.009.086	FORK DAMPER ASSEMBLY - REMOTE 17MM TURNKEY 80-150MM (POPLOC, PRE-2013 PUSHLOC)(THREAD.8MM)(RIGHT SIDE INTERNALS)- RECON SILVER TK C1+ (2017-2021)/RECON TK A1+ (2018+)
3b	11.4018.009.085	FORK DAMPER ASSEMBLY - CROWN TURNKEY 80-150MM (THREAD .8MM) (RIGHT SIDE INTERNALS) - RECON SILVER TK C1+ (2017-2021)/RECON TK A1+ (2018+)
4	11.4018.082.028	FORK COMPRESSION DAMPER SPARE HOUSING STOP - FITS TK AND RL REMOTE DAMPERS (INCLUDES HOUSING STOP AND SET SCREW) - JUDY/RECON/30/35 (2020-2021)
	SPRING INTERNALS	
6	11.4018.010.218	FORK SPRING SOLO AIR ASSEMBLY - 80-120MM-27.5/29 (THREAD 0.8MM)(INCLUDES TOP CAP, PISTON, SHAFT BOLT, SPACERS)-RCN SILVER RL B1+/TK C1+ (2017+)/RECON RL A1-A2 (NONBOOST)(2018-2020)
6	11.4018.010.221	FORK SPRING SOLO AIR ASSEMBLY- 80-120MM-27.5/29 BOOST(THREAD 0.8MM)(INCLUDES TOP CAP, PISTON, SHAFT BOLT, SPACERS)RCN SILVER RL B1+/TK C1+ (2017+)/RECON RL A1-A2 BOOST(2018-2020)
6	11.4018.010.224	FORK SPRING SOLO AIR ASSEMBLY- 130-150MM-27.5/29 BOOST(THREAD 0.8MM)(INCLUDES TOP CAP, PISTON, SHAFT BOLT,SPACERS)RCN SILVER RL B1+/TK C1+ (2017+)/RECON RL A1-A2 BOOST(2018-2020)
ts	11.4018.034.000	FORK SPRING TRAVEL SPACERS - SOLO AIR (USED TO CHANGE TRAVEL) - RECON/RECON BOOST, 30 GOLD/SILVER, XC 32/30, PARAGON, SEKTOR SILVER, 35G/JUDY G
	SPARES	
7	11.4015.534.010	FORK HOSE CLAMP - PIKE/LYRIK/YARI/SID/REVELATION/BOXXER/XC30/30G/30S/RECON/SEKTOR/BLUTO/REBA/35G/35S
8	11.4310.465.000	FORK SHAFT FASTENER KIT - (INCLUDES SHAFT BOLTS & CRUSH WASHERS)
bulk	11.4015.259.000	FORK CRUSH WASHERS - 8MM (QTY 50)
bulk	11.4015.260.000	FORK CRUSH WASHER RETAINER - 8MM (QTY 50)
	TOOLS/GREASE/FLUIDS	
ns	00.4318.031.000	FORK LOWER LEG DUST SEAL INSTALLATION TOOL 32MM (FOR FLANGELESS AND FLANGED DUST SEALS)
ns	00.4315.023.010	HIGH-PRESSURE FORK/SHOCK PUMP (300 PSI MAX) ROCKSHOX
ns	00.4315.022.010	REAR SHOCK SCHRADER VALVE REMOVAL TOOL ROCKSHOX
ns	11.4315.021.020	ROCKSHOX SUSPENSION OIL, 5WT, 120ML BOTTLE - FORK DAMPER
ns	11.4015.354.010	ROCKSHOX SUSPENSION OIL, 5WT, 1 LITER BOTTLE - FORK DAMPER
ns	11.4315.021.040	ROCKSHOX SUSPENSION OIL, 15WT, 120ML BOTTLE - LOWER LEGS
ns	11.4015.354.030	ROCKSHOX SUSPENSION OIL, 15WT, 1 LITER BOTTLE - LOWER LEGS
ns	00.4318.008.000	GREASE SRAM BUTTER 20ML SYRINGE, FRICTION REDUCING GREASE BYSLICKOLEUM - DOUBLE TIME HUB PAWLS, FORKS & REVERB SERVICE
ns	00.4318.008.001	GREASE SRAM BUTTER 1OZ CONTAINER, FRICTION REDUCING GREASE BY SLICKOLEUM - DOUBLE TIME HUB PAWLS, FORKS & REVERB SERVICE

RECON SILVER TK B1 (2016)

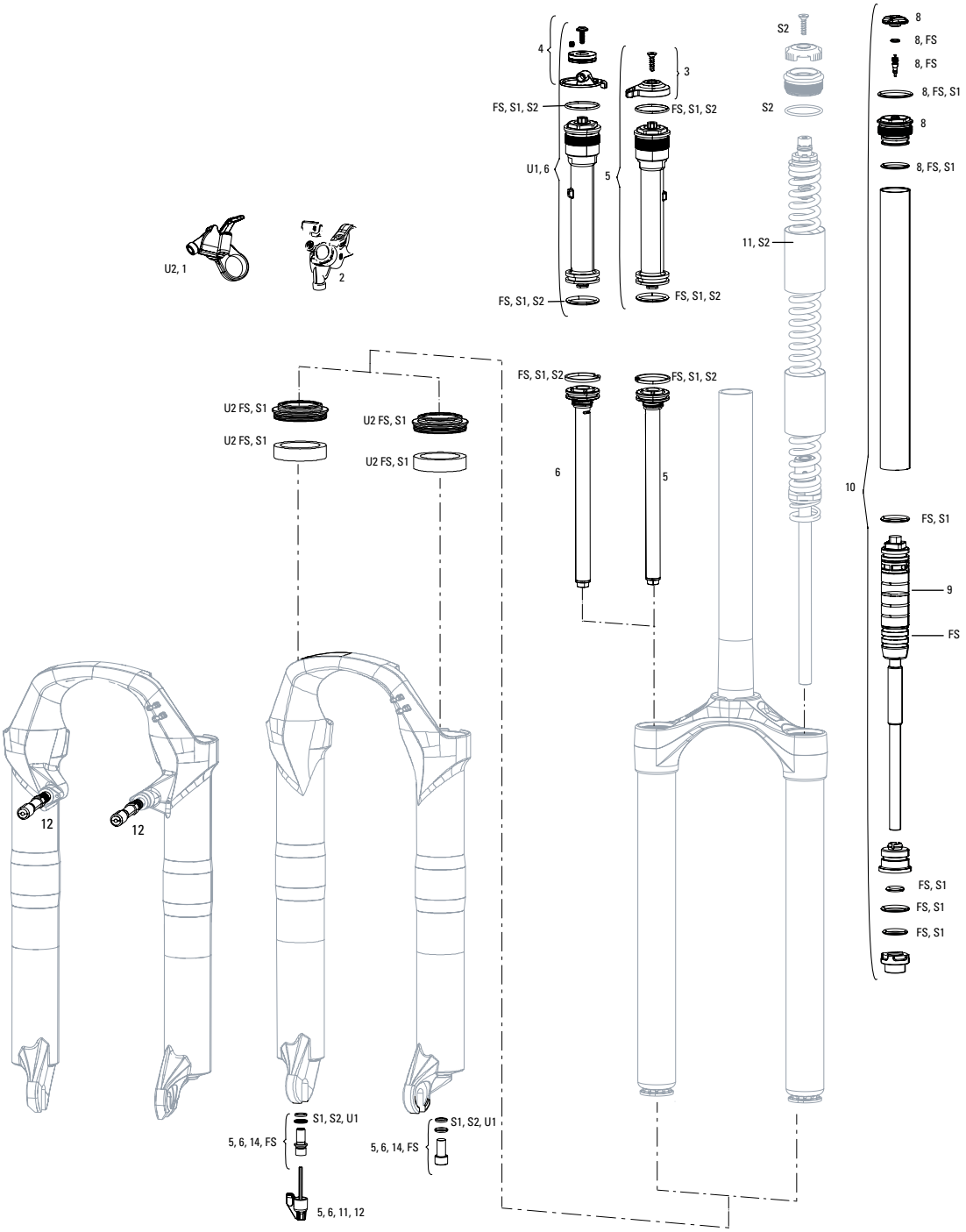

Note:

1. Full service kits include replaceable o-rings, glide rings, retaining rings, crush washers, crush washer retainers and shaft bolts/nuts. Not all service parts are pictured. All basic service kits include the following replaceable wear items: o-rings, glide rings, dust seals, and foam rings.
2. Convert from Crown Adjust to Remote Adjust: Remote compression damper requires remote compression adjuster spool, cable clamp and remote lever assembly.

RECON SILVER TK B1 (2016)

	UPGRADES	
U1	00.4318.002.007	REMOTE UPGRADE KIT - TURNKEY 17MM - INCLUDES REMOTE COMPRESSION DAMPER AND POPLOC REMOTE RIGHT 32MM SEKTOR SILVER/XC32/RECON SILVER B1
U2	00.4318.045.002	FORK DUST WIPER UPGRADE KIT - 32MM BLACK FLANGED LOW FRICTION SEALS (INCLUDES DUST WIPERS, 5MM & 10MM FOAM RINGS) - SID/REVELATION/REBA/ARGLE/SEKTOR/TORA/RECON/XC32
	SERVICE	
FS	11.4018.014.000	FORK SERVICE KIT - FULL SERVICE SOLO AIR (INCLUDES AIR SEALS, DAMPER SEALS & HARDWARE) - XC32/RECON SILVER B1
S1	00.4315.032.410	AM FORK SERVICE KIT, BASIC (INCLUDES DUST SEALS, FOAM RINGS,O-RING SEALS) - XC32 SOLO AIR A3/RECON SILVER B1
S2	11.4015.485.000	FORK SERVICE KIT - TORA TK/XC32/RECON SILVER B1
	DAMPER	
1	11.4308.848.000	REMOTE - POPLOC LEFT 17MM CABLE PULL - RL (PRE-2013) & ALL TK DAMPERS, (NOT COMPATIBLE WITH 2013+ MOCO)
1	11.4309.207.000	REMOTE - POPLOC RIGHT 17MM CABLE PULL - RL (PRE-2013) & ALL TK DAMPERS
2	11.4308.849.000	REMOTE - POPLOC LEFT ADJUSTABLE 17MM CABLE PULL (NOT COMPATIBLE WITH 2013+ MOCO RL) - RL (PRE-2013) & TK DAMPERS
2	11.4309.208.000	REMOTE - POPLOC RIGHT ADJUSTABLE 17MM CABLE PULL (NOT COMPATIBLE WITH 2013+ MOCO RL) - RL (PRE-2013) & TK DAMPERS
3	11.4015.461.050	FORK COMPRESSION DAMPER KNOB KIT - CROWN TURNKEY - RECON/SEKTOR/30 GOLD/30 SILVER/XC32/XC30 A1-A3
4	11.4018.011.001	FORK COMPRESSION DAMPER KNOB KIT - REMOTE 17MM(POPLOC, PRE-2013 PUSHLOC) - XC32 A1-A3(2011-2015) /SEKTOR SILVER A1 (2014-2016)/RECON SILVER A1-B1(2013-2017)
5	11.4018.009.038	FORK DAMPER ASSEMBLY - CROWN TURNKEY 80-120MM (INCLUDES RIGHT SIDE INTERNALS) - SEKTOR SILVER/XC32/RECON SILVER B1
6	11.4018.009.039	FORK DAMPER ASSEMBLY - REMOTE 17MM (POPLOC, PRE-2013 PUSHLOC) 80-120MM (INCLUDES RIGHT SIDE INTERNALS) - SEKTOR SILVER/XC32/RECON SILVER B1
	SPRING	
8	11.4018.012.000	FORK SPRING AIR TOP CAP - 32 MM (STEEL UPPER TUBES ONLY) - XC32 A1-A3/RECON SILVER TK A1-B1/ARGYLE A1-A2
9	11.4018.034.000	FORK SPRING TRAVEL SPACERS - SOLO AIR (USED TO CHANGE TRAVEL) - RECON/RECON BOOST, 30 GOLD/SILVER, XC 32/30, PARAGON, SEKTOR SILVER, 35G/JUDY G
10	11.4018.010.032	FORK SPRING SOLO AIR ASSEMBLY - 100MM-26/27.5/29 SOLO AIR (INCLUDES TOP CAP, AIR PISTON, SHAFT BOLT) - XC32/RECON SILVER B1
10	11.4018.010.034	FORK SPRING SOLO AIR ASSEMBLY - 120MM-26/27.5/29 SOLO AIR (INCLUDES TOP CAP, AIR PISTON, SHAFT BOLT) - XC32/RECON SILVER B1
10	11.4018.010.104	FORK SPRING SOLO AIR ASSEMBLY - 130MM-26/27.5/29 (INCLUDES TOP CAP, AIR PISTON, SHAFT BOLT) - SEKTOR SILVER A1/RECON SILVER B1
	SPARES	
11	11.4309.336.000	FORK SPRING COIL ISOLATOR KIT - (INCLUDES 3 HEAT-SHRINK COIL TUBES) REDUCES NOISE AND CHATTER
12	11.4307.469.000	FORK BRAKE POST KIT - STEEL (QTY 2)
14	11.4310.465.000	FORK SHAFT FASTENER KIT - (INCLUDES SHAFT BOLTS & CRUSH WASHERS)
bulk	11.4015.259.000	FORK CRUSH WASHERS - 8MM (QTY 50)
bullk	11.4015.260.000	FORK CRUSH WASHER RETAINER - 8MM (QTY 50)
ns	00.4318.005.002	AXLE MAXLE LITE FRONT, 15X100, LENGTH 148MM, THREAD LENGTH 9MM, THREAD PITCH M15X1.50 - REBA/REVELATION/RECON/SEKTOR/XC32/SID/SID SL/SID 35MM
ns	00.4318.005.018	AXLE MAXLE STEALTH FRONT, 15X100, LENGTH 148MM, THREAD LENGTH 9MM, THREAD PITCH M15X1.50 (NOT COMPATIBLE WITH RS-1) - 15X100, SID SL, SID 35MM
ns	11.4318.004.001	AXLE MAXLE - LITE 15MM XC LEVER ASSEMBLY
	TOOLS/GREASE/FLUIDS	
ns	00.4318.031.000	FORK LOWER LEG DUST SEAL INSTALLATION TOOL 32MM (FOR FLANGELESS AND FLANGED DUST SEALS)
ns	00.4315.023.010	HIGH-PRESSURE FORK/SHOCK PUMP (300 PSI MAX) ROCKSHOX
ns	00.4315.022.010	REAR SHOCK SCHRADER VALVE REMOVAL TOOL ROCKSHOX
ns	11.4315.021.020	ROCKSHOX SUSPENSION OIL, 5WT, 120ML BOTTLE - FORK DAMPER
ns	11.4015.354.010	ROCKSHOX SUSPENSION OIL, 5WT, 1 LITER BOTTLE - FORK DAMPER
ns	11.4315.021.040	ROCKSHOX SUSPENSION OIL, 15WT, 120ML BOTTLE - LOWER LEGS
ns	11.4015.354.030	ROCKSHOX SUSPENSION OIL, 15WT, 1 LITER BOTTLE - LOWER LEGS
ns	00.4318.008.000	GREASE SRAM BUTTER 20ML SYRINGE, FRICTION REDUCING GREASE BYSLICKOLEUM - DOUBLE TIME HUB PAWLS, FORKS & REVERB SERVICE
ns	00.4318.008.001	GREASE SRAM BUTTER 1OZ CONTAINER, FRICTION REDUCING GREASE BY SLICKOLEUM - DOUBLE TIME HUB PAWLS, FORKS & REVERB SERVICE

RECON SILVER A1-A3 (2011-2015)

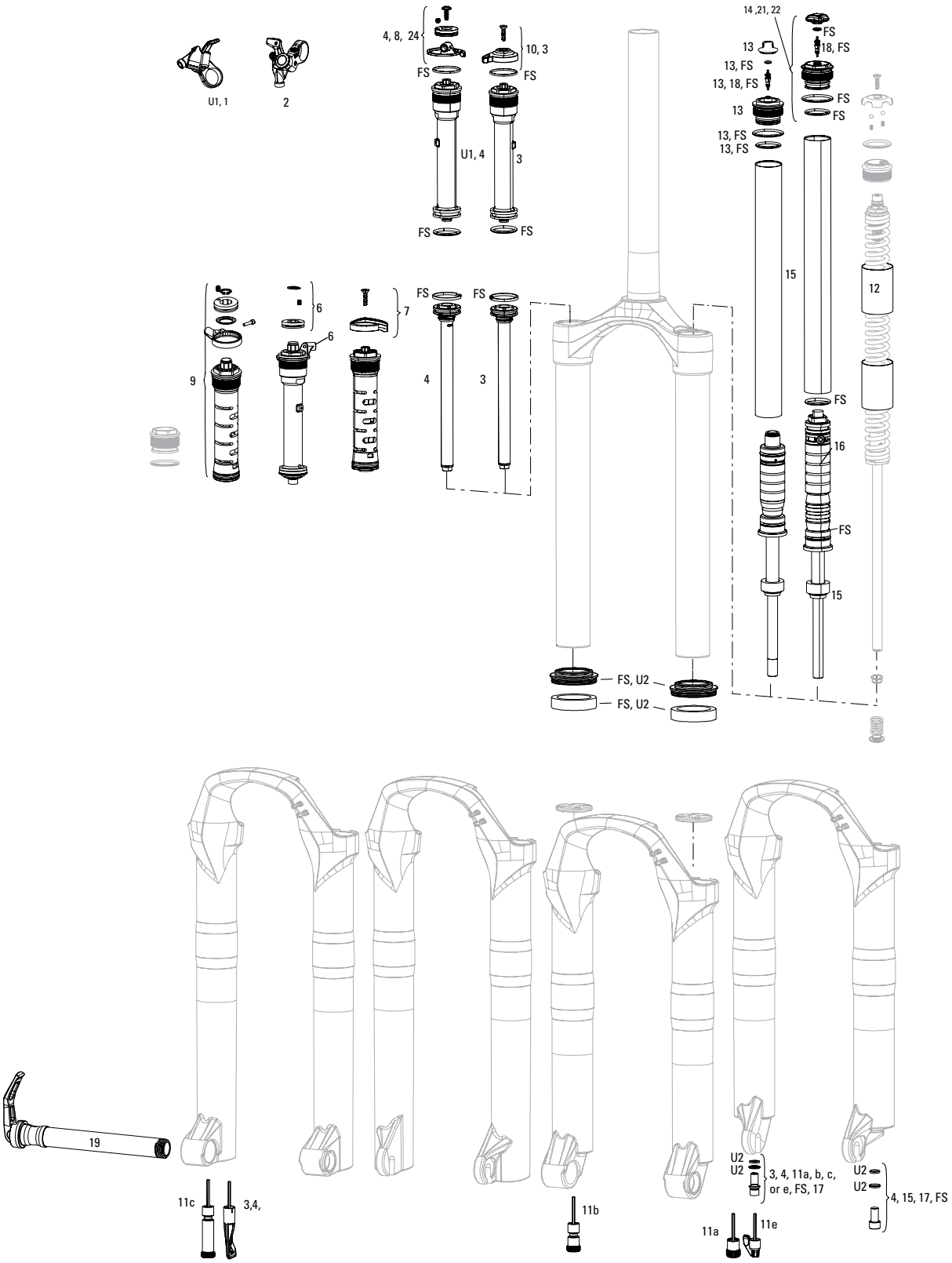

Note:

1. Full service kits include replaceable o-rings, glide rings, retaining rings, crush washers, crush washer retainers and shaft bolts/nuts. Not all service parts are pictured. All basic service kits include the following replaceable wear items: o-rings, glide rings, dust seals, and foam rings.
2. Convert from Crown Adjust to Remote Adjust: Remote compression damper requires remote compression adjuster spool, cable clamp and remote lever assembly.

RECON SILVER A1-A3 (2011-2015)

	UPGRADE	
U1	00.4318.002.000	REMOTE UPGRADE KIT - TURNKEY 17MM - INCLUDES REMOTE COMPRESSION DAMPER AND POPLOC REMOTE RIGHT- RECON SILVER (2010-2015)
U2	00.4318.045.002	FORK DUST WIPER UPGRADE KIT - 32MM BLACK FLANGED LOW FRICTION SEALS (INCLUDES DUST WIPERS, 5MM & 10MM FOAM RINGS) - SID/REVELATION/REBA/ARGLE/SEKTOR/TORA/RECON/XC32
	SERVICE	
ns	11.4310.706.000	FORK SERVICE KIT - TURNKEY/MOCO/SOLO AIR- TORA/RECON SILVER (A1-A3/2011-2015)
FS	11.4018.015.000	FORK SERVICE KIT - FULL SERVICE SOLO AIR (INCLUDES AIR SEALS, DAMPER SEALS & HARDWARE) - RECON SILVER 2013-2015
ns	00.4315.032.010	AM FORK SERVICE KIT, BASIC (INCLUDES DUST SEALS, FOAM RINGS,O-RING SEALS) - RECON SILVER COIL (2012)
ns	00.4315.032.020	AM FORK SERVICE KIT, BASIC (INCLUDES DUST SEALS, FOAM RINGS,O-RING SEALS) - RECON SILVER SOLO AIR (2012)
ns	00.4315.032.280	AM FORK SERVICE KIT, BASIC (INCLUDES DUST SEALS, FOAM RINGS,O-RING SEALS) - RECON SILVER (2013-2015)
	REMOTE	
1	11.4308.848.000	REMOTE - POPLOC LEFT 17MM CABLE PULL - RL (PRE-2013) & ALL TK DAMPERS, (NOT COMPATIBLE WITH 2013+ MOCO)
1	11.4309.207.000	REMOTE - POPLOC RIGHT 17MM CABLE PULL - RL (PRE-2013) & ALL TK DAMPERS
2	11.4308.849.000	REMOTE - POPLOC LEFT ADJUSTABLE 17MM CABLE PULL (NOT COMPATIBLE WITH 2013+ MOCO RL) - RL (PRE-2013) & TK DAMPERS
2	11.4309.208.000	REMOTE - POPLOC RIGHT ADJUSTABLE 17MM CABLE PULL (NOT COMPATIBLE WITH 2013+ MOCO RL) - RL (PRE-2013) & TK DAMPERS
	DAMPER	
3	11.4018.009.044	FORK DAMPER ASSEMBLY - CROWN TURNKEY 26/29 80-120MM(INCLUDES RIGHT SIDE INTERNALS) - RECON SILVER A1-A3
4	11.4018.009.045	FORK DAMPER ASSEMBLY - REMOTE 17MM (POPLOC, PRE-2013 PUSHLOC) TURNKEY 26/29 80-120MM (INCLUDES RIGHT SIDE INTERNALS) - RECON SILVER A1-A3
6	11.4310.673.000	FORK COMPRESSION DAMPER KNOB KIT - CROWN & (INCLUDES, REMOTE SPOOL, CABLE CLAMP) - XC32 A1-A3 (2011-2015)/RECON SILVER A1-A3 (2011-2015)
7	11.4015.461.050	FORK COMPRESSION DAMPER KNOB KIT - CROWN TURNKEY - RECON/SEKTOR/30 GOLD/30 SILVER/XC32/XC30 A1-A3
8	11.4018.011.001	FORK COMPRESSION DAMPER KNOB KIT - REMOTE 17MM(POPLOC, PRE-2013 PUSHLOC) - XC32 A1-A3(2011-2015) /SEKTOR SILVER A1 (2014-2016)/RECON SILVER A1-B1(2013-2017)
9	11.4015.306.030	FORK COMPRESSION DAMPER - REMOTE 17MM (POPLOC, PRE-2013 PUSHLOC) MOCO (INCLUDES SPOOL ASSEMBLY & CABLE-STOP CLAMP) - 2010 TORA XC/SL/RACE, 2011 RECON SILVER
10	11.4018.020.000	FORK COMPRESSION DAMPER - REMOTE 10MM (2013+ PUSHLOC, ONELOC, TWISTLOC)(INCLUDES SPOOL & CABLE CLAMP)- RECON SILVER (A1-A3/2013-2015)
11a	11.4310.645.000	FORK REBOUND DAMPER KNOB KIT - (INCLUDES ADJUSTER KNOB & BOLT) RED SHORT 26" - REBA (2009-2011), REVELATION 2009/TORA/RECON (2011-2012)/SEKTOR (2011-2012)
11b	11.4015.404.010	FORK REBOUND DAMPER KNOB KIT - (INCLUDES ADJUSTER KNOB & BOLT) ALUMINUM RED LONG - (USE WITH MAXLE LOWER LEG)
11c	11.4015.318.000	FORK REBOUND DAMPER KNOB KIT - (INCLUDES ADJUSTER KNOB & BOLT) LONG/BOLT (ALUMINUM RED) - TORA/RECON/REBA/REVELATION 27/29"
	SPRING	
12	11.4309.336.000	FORK SPRING COIL ISOLATOR KIT - (INCLUDES 3 HEAT-SHRINK COIL TUBES) REDUCES NOISE AND CHATTER
13	11.4015.124.000	FORK SPRING AIR TOP CAP - 32MM ASSEMBLY (STEEL UPPER TUBES) - TORA/RECON SILVER/ARGYLE
14	11.4018.012.000	FORK SPRING AIR TOP CAP - 32 MM (STEEL UPPER TUBES ONLY) - XC32 A1-A3/RECON SILVER TK A1-B1/ARGYLE A1-A2
15	11.4018.010.036	FORK SPRING SOLO AIR ASSEMBLY - 100MM-26/29 (INCLUDES TOP CAP, AIR PISTON, SHAFT BOLT) - RECON SILVER A1-A3
15	11.4015.450.000	FORK SPRING TRAVEL SPACERS - ALL TRAVEL SPACER KIT (NOT COMPATIBLE WITH SID/REBA/REVELATION SOLO AIR SPRING)
	SPARES	
ns	00.4318.031.000	FORK LOWER LEG DUST SEAL INSTALLATION TOOL 32MM (FOR FLANGELESS AND FLANGED DUST SEALS)
ns	11.4307.469.000	FORK BRAKE POST KIT - STEEL (QTY 2)
17	11.4310.465.000	FORK SHAFT FASTENER KIT - (INCLUDES SHAFT BOLTS & CRUSH WASHERS)
18	11.4308.327.002	AIR VALVE KIT - SCHRADER CORE (QTY 2) - FORKS/SHOCKS/REVERB
bulk	11.4015.259.000	FORK CRUSH WASHERS - 8MM (QTY 50)
bulk	11.4015.260.000	FORK CRUSH WASHER RETAINER - 8MM (QTY 50)
bulk	11.4310.698.000	FORK FOAM RING KIT - 32MM X 10MM (QTY 20) - REVELATION/ARGYLE/SEKTOR/TORA/RECON/XC32
ns	00.4318.005.002	AXLE MAXLE LITE FRONT, 15X100, LENGTH 148MM, THREAD LENGTH 9MM, THREAD PITCH M15X1.50 - REBA/REVELATION/RECON/SEKTOR/XC32/SID/SID SL/SID 35MM
ns	00.4318.005.018	AXLE MAXLE STEALTH FRONT, 15X100, LENGTH 148MM, THREAD LENGTH 9MM, THREAD PITCH M15X1.50 (NOT COMPATIBLE WITH RS-1) - 15X100, SID SL, SID 35MM
ns	11.4318.004.001	AXLE MAXLE - LITE 15MM XC LEVER ASSEMBLY
19	00.4315.013.010	AXLE MAXLE LITE FRONT MTB 20X110 LENGTH 158MM THREAD LENGTH 9MM THREAD PITCH M20X2.0 - 32MM CHASSIS (2011-2016)
	TOOLS/GREASE/FLUIDS	
ns	00.4318.031.000	FORK LOWER LEG DUST SEAL INSTALLATION TOOL 32MM (FOR FLANGELESS AND FLANGED DUST SEALS)
ns	00.4315.023.010	HIGH-PRESSURE FORK/SHOCK PUMP (300 PSI MAX) ROCKSHOX
ns	00.4315.022.010	REAR SHOCK SCHRADER VALVE REMOVAL TOOL ROCKSHOX
ns	11.4315.021.020	ROCKSHOX SUSPENSION OIL, 5WT, 120ML BOTTLE - FORK DAMPER
ns	11.4015.354.010	ROCKSHOX SUSPENSION OIL, 5WT, 1 LITER BOTTLE - FORK DAMPER
ns	11.4315.021.040	ROCKSHOX SUSPENSION OIL, 15WT, 120ML BOTTLE - LOWER LEGS
ns	11.4015.354.030	ROCKSHOX SUSPENSION OIL, 15WT, 1 LITER BOTTLE - LOWER LEGS
ns	00.4318.008.000	GREASE SRAM BUTTER 20ML SYRINGE, FRICTION REDUCING GREASE BYSLICKOLEUM - DOUBLE TIME HUB PAWLS, FORKS & REVERB SERVICE
ns	00.4318.008.001	GREASE SRAM BUTTER 1OZ CONTAINER, FRICTION REDUCING GREASE BY SLICKOLEUM - DOUBLE TIME HUB PAWLS, FORKS & REVERB SERVICE
ns	11.4307.469.000	FORK BRAKE POST KIT - STEEL (QTY 2)
16	11.4310.290.000	FORK DUST WIPER KIT - 32MM GREY (INCLUDES FLANGED DUST WIPERS & 10MM FOAM RINGS) - REVELATION/ARGYLE/SEKTOR/TORA/RECON/XC32
17	11.4310.465.000	FORK SHAFT FASTENER KIT - (INCLUDES SHAFT BOLTS & CRUSH WASHERS)
18	11.4308.327.002	AIR VALVE KIT - SCHRADER CORE (QTY 2) - FORKS/SHOCKS/REVERB
bulk	11.4015.259.000	FORK CRUSH WASHERS - 8MM (QTY 50)
bulk	11.4015.260.000	FORK CRUSH WASHER RETAINER - 8MM (QTY 50)
bulk	11.4310.695.000	FORK DUST WIPER KIT - 32MM GREY (INCLUDES FLANGED DUST WIPERS) (QTY 20) - SID/REVELATION/REBA/ARGYLE/SEKTOR/TORA/RECON/XC32
bulk	11.4310.698.000	FORK FOAM RING KIT - 32MM X 10MM (QTY 20) - REVELATION/ARGYLE/SEKTOR/TORA/RECON/XC32

RECON GOLD C1 (2021)

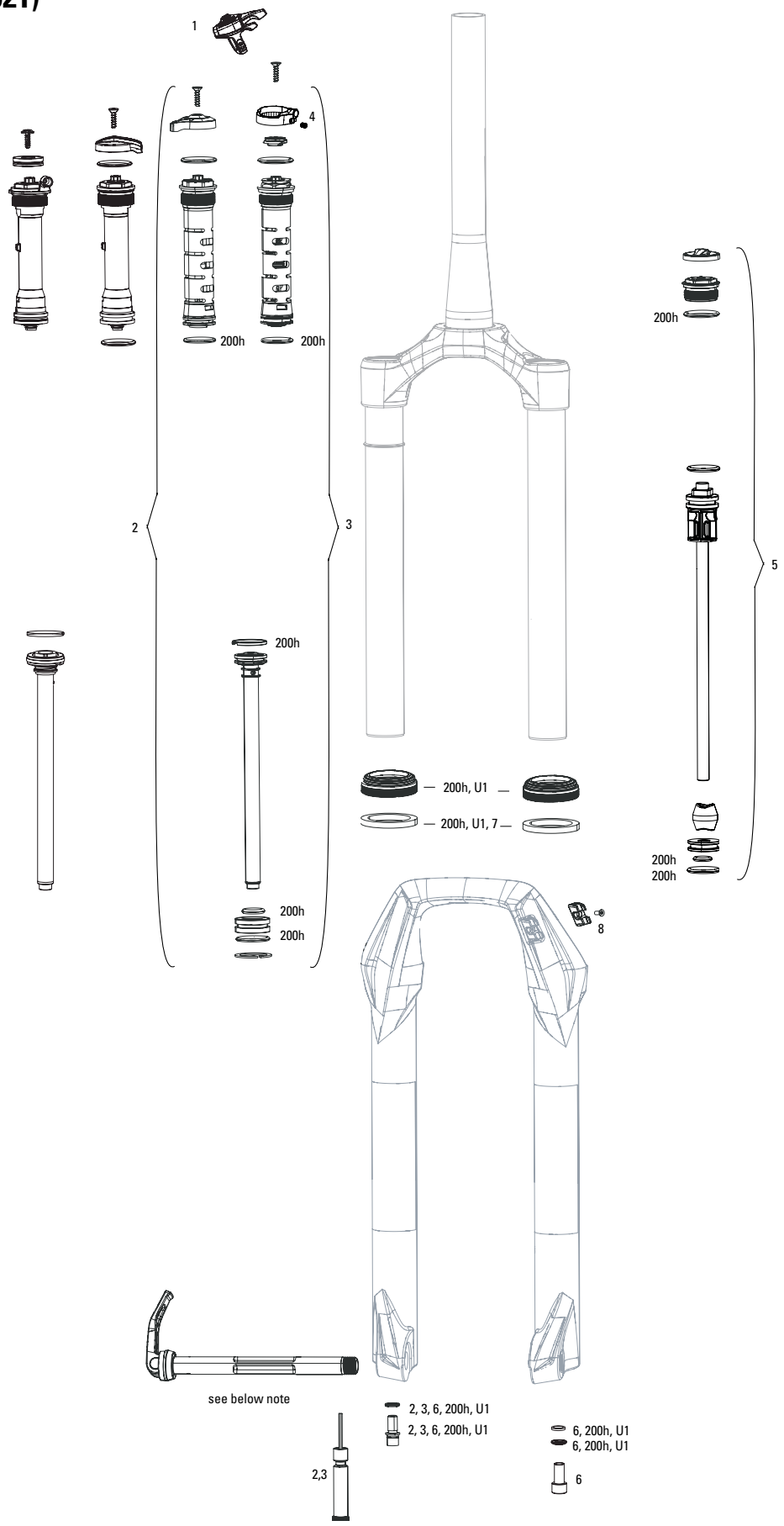

Note:
1. Decal and Maxle pages can be found in back of the catalog.

RECON GOLD C1 (2021)

	UPGRADES	
U1	00.4318.045.003	FORK DUST WIPER UPGRADE KIT - 32MM BLACK FLANGELESS ULTRA-LOW FRICTION SKF SEALS (INCLUDES DUST WIPERS & 4MM FOAM RINGS) - BLUTO/RS-1/SID B1 (2017+)/32MM BOOST™ FORKS
	SERVICE KITS	
200h	00.4315.032.653	200 HOUR/1 YEAR SERVICE KIT (INCLUDES DUST SEALS, FOAM RINGS, O-RING SEALS) - RECON GOLD RL BOOST A4 (2018+)/SEKTOR RL C1 (2019+)
	DAMPER	
1	00.4318.002.009	REMOTE - ONELOC LEFT/ABOVE, RIGHT/BELOW 10MM, REMOTE ONLY (INCLUDES REMOTE, CABLE&HOUSING)-SID,REBA,REVELATION,BLUTO,SEKTOR,RECONGOLD(2013-2017)/JUDY
1	00.4318.002.010	REMOTE - ONELOC RIGHT/ABOVE, LEFT/BELOW 10MM, REMOTE ONLY (INCLUDES REMOTE, CABLE&HOUSING)-SID,REBA,REVELATION,BLUTO,SEKTOR,RECONGOLD(2013-2017)/JUDY
2	11.4018.088.000	FORK DAMPER ASSEMBLY - CROWN MOCO RL (INCLUDES COMPRESSION & REBOUND DAMPER, SEALHEAD, KNOBS, & SHAFT BOLT) - RECON GOLD A1-C1/SEKTOR GOLD A1-B1/SEKTOR RL C1+
3	11.4018.088.001	FORK DAMPER ASSEMBLY - REMOTE 10MM (2013+ PUSHLOC, ONELOC, TWISTLOC) MOCO RL 27.5/29 80-150MM (INCLUDES RIGHT SIDE INTERNALS)- RECON GOLD A1-C1/SEKTOR GOLD A1-B1/SEKTOR RL C1+
4	11.4018.082.028	FORK COMPRESSION DAMPER SPARE HOUSING STOP - FITS TK AND RL REMOTE DAMPERS (INCLUDES HOUSING STOP AND SET SCREW) - JUDY/RECON/30/35 (2020-2021)
	SPRING	
5	11.4018.087.000	FORK SPRING DEBONAIR ASSEMBLY - 80-120MM (INCLUDES TOP CAP, DEBONAIR SPRING, TRAVEL SPACERS & SHAFT BOLT) - SEKTOR RL C1
5	11.4018.087.001	FORK SPRING DEBONAIR ASSEMBLY - 130-150MM (INCLUDES TOP CAP, DEBONAIR SPRING, TRAVEL SPACERS & SHAFT BOLT) - SEKTOR RL C1
	SPARES	
6	11.4310.465.000	FORK SHAFT FASTENER KIT - (INCLUDES SHAFT BOLTS & CRUSH WASHERS)
bulk	11.4015.259.000	FORK CRUSH WASHERS - 8MM (QTY 50)
bulk	11.4015.260.000	FORK CRUSH WASHER RETAINER - 8MM (QTY 50)
7	11.4018.028.015	FORK FOAM RING KIT - 32MM X 4MM (QTY 20) - SID RLC A1/SID XX/RL B1 (2017+)/RECON BOOST RL C1/TK B1 (2020+)
8	11.4015.534.011	FORK HOSE CLAMP - SID RLC A1/SID XX/RL B1-B4 (2017-2020) REBA A7 80-100MM (2018+)
	TOOLS/GREASE/FLUIDS	
ns	00.4318.031.000	FORK LOWER LEG DUST SEAL INSTALLATION TOOL 32MM (FOR FLANGELESS AND FLANGED DUST SEALS)
ns	00.4315.023.010	HIGH-PRESSURE FORK/SHOCK PUMP (300 PSI MAX) ROCKSHOX
ns	00.4315.022.010	REAR SHOCK SCHRADER VALVE REMOVAL TOOL ROCKSHOX
ns	11.4315.021.020	ROCKSHOX SUSPENSION OIL, 5WT, 120ML BOTTLE - FORK DAMPER
ns	11.4015.354.010	ROCKSHOX SUSPENSION OIL, 5WT, 1 LITER BOTTLE - FORK DAMPER
ns	11.4315.021.040	ROCKSHOX SUSPENSION OIL, 15WT, 120ML BOTTLE - LOWER LEGS
ns	11.4015.354.030	ROCKSHOX SUSPENSION OIL, 15WT, 1 LITER BOTTLE - LOWER LEGS
ns	00.4318.008.000	GREASE SRAM BUTTER 20ML SYRINGE, FRICTION REDUCING GREASE BYSLICKOLEUM - DOUBLE TIME HUB PAWLS, FORKS & REVERB SERVICE
ns	00.4318.008.001	GREASE SRAM BUTTER 1OZ CONTAINER, FRICTION REDUCING GREASE BY SLICKOLEUM - DOUBLE TIME HUB PAWLS, FORKS & REVERB SERVICE

RECON GOLD A4-A5 (2018-2020)

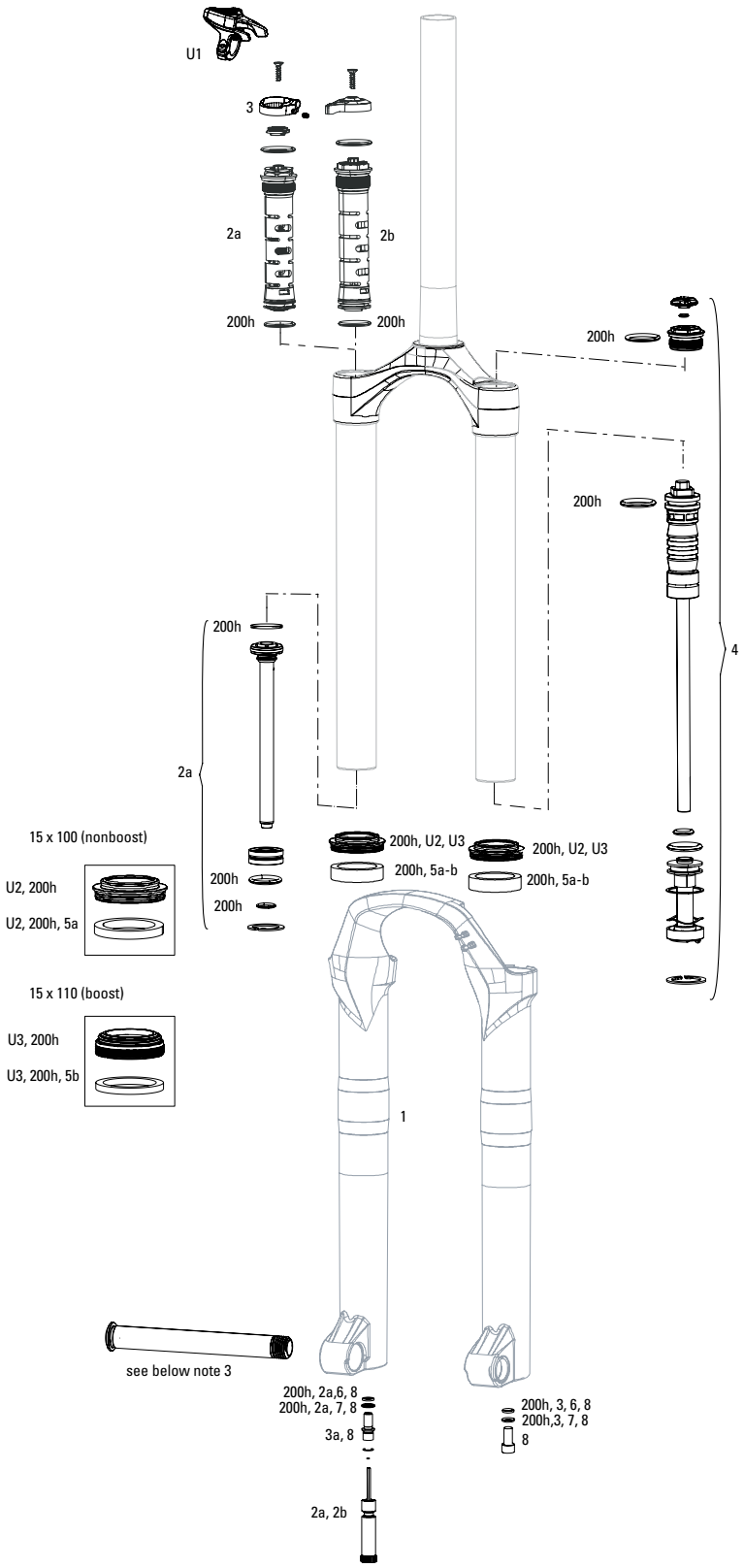

Note:

1. 200h service kits include replaceable o-rings, glide rings, retaining rings, crush washers, crush washer retainers and shaft bolts/nuts. All air service kits include replacement schrader valve cores. Not all service parts are pictured. All basic service kits include the following replaceable wear items: o-rings, glide rings, dust seals, and foam rings.
2. Convert from Crown Adjust to Remote Adjust: Remote compression damper, remote compression adjuster spool, cable clamp and remote lever assembly.
3. Decal and Maxle pages can be found in back of the catalog.

RECON GOLD A4-A5 (2018-2020)

	UPGRADES	
U1	00.4318.002.017	REMOTE UPGRADE KIT - ONELOC RIGHT/ABOVE, LEFT/BELOW 10MM MCRL DAMPER PUSH TO CLOSE (INCLUDES REMOTE, COMP DAMPER, CABLE&HOUSING)-RECONGOLD/SEKTORGOLD(2013-2017)
U2	00.4318.045.002	FORK DUST WIPER UPGRADE KIT - 32MM BLACK FLANGED LOW FRICTION SEALS (INCLUDES DUST WIPERS, 5MM & 10MM FOAM RINGS) - SID/REVELATION/REBA/ARGLE/SEKTOR/TORA/RECON/XC32
U3	00.4318.045.003	FORK DUST WIPER UPGRADE KIT - 32MM BLACK FLANGELESS ULTRA-LOW FRICTION SKF SEALS (INCLUDES DUST WIPERS & 4MM FOAM RINGS) - BLUTO/RS-1/SID B1 (2017+)/32MM BOOST™ FORKS
	SERVICE	
200h	00.4315.032.652	200 HOUR/1 YEAR SERVICE KIT (INCLUDES DUST SEALS, FOAM RINGS, O-RING SEALS) - RECON GOLD RL A4 (2018+)
200h	00.4315.032.653	200 HOUR/1 YEAR SERVICE KIT (INCLUDES DUST SEALS, FOAM RINGS, O-RING SEALS) - RECON GOLD RL BOOST A4 (2018+)/SEKTOR RL C1 (2019+)
	LOWER LEG	
1	11.4018.006.254	FORK LOWER LEG - (DECALS NOT INCLUDED) 29 15X110 BOOST™ BLACK - REVELATION A5(2017), REBA 130-150MM A7 (2018+)
	DAMPER	
2a	11.4018.088.000	FORK DAMPER ASSEMBLY - CROWN MOCO RL (INCLUDES COMPRESSION & REBOUND DAMPER, SEALHEAD, KNOBS, & SHAFT BOLT) - RECON GOLD A1-C1/SEKTOR GOLD A1-B1/SEKTOR RL C1+
2b	11.4018.088.001	FORK DAMPER ASSEMBLY - REMOTE 10MM (2013+ PUSHLOC, ONELOC, TWISTLOC) MOCO RL 27.5/29 80-150MM (INCLUDES RIGHT SIDE INTERNALS)- RECON GOLD A1-C1/SEKTOR GOLD A1-B1/SEKTOR RL C1+
3	11.4018.082.028	FORK COMPRESSION DAMPER SPARE HOUSING STOP - FITS TK AND RL REMOTE DAMPERS (INCLUDES HOUSING STOP AND SET SCREW) - JUDY/RECON/30/35 (2020-2021)
ns	11.4018.009.049	FORK DAMPER ASSEMBLY - REMOTE REMOTE 17MM (POPLOC, PRE-2013 PUSHLOC) TURNKEY 26,27.5,29 80-150 (INCLUDES RIGHT SIDE INTERNALS) - SEKTOR GOLD A1-B1/RECON GOLD A1-A5
ns	11.4018.009.048	FORK DAMPER ASSEMBLY - CROWN TURNKEY 26,27.5,29 80-150 (INCLUDES RIGHT SIDE INTERNALS) - SEKTOR GOLD A1-B1/RECON GOLD A1-A5
	SPRING	
4	11.4018.010.040	FORK SPRING SOLO AIR ASSEMBLY - 100MM-26/27.5/29 (INCLUDES TOP CAP, AIR PISTON, SHAFT BOLT) - RECON GOLD
4	11.4018.010.045	FORK SPRING SOLO AIR ASSEMBLY - 150MM-26/29 (INCLUDES TOP CAP, AIR PISTON, SHAFT BOLT) - SEKTOR
	SPARES	
	15X100mm	
5a	11.4310.698.000	FORK FOAM RING KIT - 32MM X 10MM (QTY 20) - REVELATION/ARGYLE/SEKTOR/TORA/RECON/XC32
5b	11.4018.028.015	FORK FOAM RING KIT - 32MM X 4MM (QTY 20) - SID RLC A1/SID XX/RL B1 (2017+)/RECON BOOST RL C1/TK B1 (2020+)
7	11.4015.260.000	FORK CRUSH WASHER RETAINER - 8MM (QTY 50)
8	11.4310.465.000	FORK SHAFT FASTENER KIT - (INCLUDES SHAFT BOLTS & CRUSH WASHERS)
	TOOLS/GREASE/FLUIDS	
ns	00.4318.031.000	FORK LOWER LEG DUST SEAL INSTALLATION TOOL 32MM (FOR FLANGELESS AND FLANGED DUST SEALS)
ns	00.4315.023.010	HIGH-PRESSURE FORK/SHOCK PUMP (300 PSI MAX) ROCKSHOX
ns	00.4315.022.010	REAR SHOCK SCHRADER VALVE REMOVAL TOOL ROCKSHOX
ns	11.4315.021.020	ROCKSHOX SUSPENSION OIL, 5WT, 120ML BOTTLE - FORK DAMPER
ns	11.4015.354.010	ROCKSHOX SUSPENSION OIL, 5WT, 1 LITER BOTTLE - FORK DAMPER
ns	11.4315.021.040	ROCKSHOX SUSPENSION OIL, 15WT, 120ML BOTTLE - LOWER LEGS
ns	11.4015.354.030	ROCKSHOX SUSPENSION OIL, 15WT, 1 LITER BOTTLE - LOWER LEGS
ns	00.4318.008.000	GREASE SRAM BUTTER 20ML SYRINGE, FRICTION REDUCING GREASE BYSLICKOLEUM - DOUBLE TIME HUB PAWLS, FORKS & REVERB SERVICE
ns	00.4318.008.001	GREASE SRAM BUTTER 1OZ CONTAINER, FRICTION REDUCING GREASE BY SLICKOLEUM - DOUBLE TIME HUB PAWLS, FORKS & REVERB SERVICE

RECON GOLD A1-A3 (2011-2017)

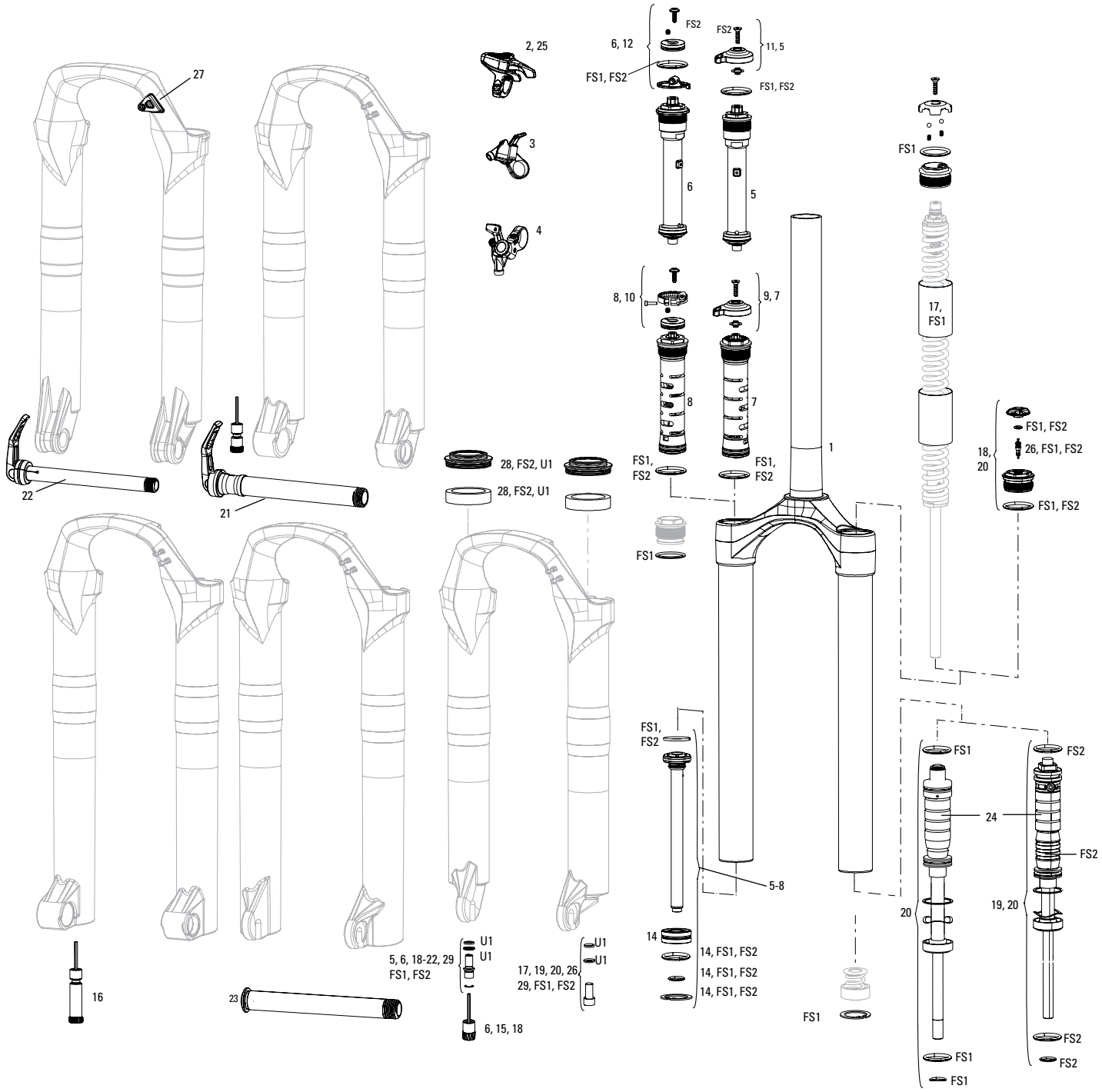

Note:

1. Full service kits include replaceable o-rings, glide rings, retaining rings, crush washers, crush washer retainers and shaft bolts/nuts. All air service kits include replacement schrader valve cores. Not all service parts are pictured. All basic service kits include the following replaceable wear items: o-rings, glide rings, dust seals, and foam rings.
2. Convert from Crown Adjust to Remote Adjust: Remote compression damper requires remote compression adjuster spool, and remote lever assembly.
3. 2013+ Recon Gold compatible with 10mm cable pull PushLoc or OneLoc

RECON GOLD A1-A3 (2011-2017)

	UPGRADES	
U1	00.4318.045.002	FORK DUST WIPER UPGRADE KIT - 32MM BLACK FLANGED LOW FRICTION SEALS (INCLUDES DUST WIPERS, 5MM & 10MM FOAM RINGS) - SID/REVELATION/REBA/ARGLE/SEKTOR/TORA/RECON/XC32
	SERVICE	
FS1	11.4015.445.000	FORK SERVICE KIT - RECON 2010/ RECON GOLD 2011
FS2	11.4018.016.000	FORK SERVICE KIT - FULL SERVICE SOLO AIR (INCLUDES AIR SEALS, DAMPER SEALS & HARDWARE) - RECON GOLD SOLO AIR (2013-2016)
ns	00.4315.032.030	AM FORK SERVICE KIT, BASIC (INCLUDES DUST SEALS, FOAM RINGS,O-RING SEALS) - RECON GOLD COIL (2012-2016)
ns	00.4315.032.040	AM FORK SERVICE KIT, BASIC (INCLUDES DUST SEALS, FOAM RINGS,O-RING SEALS) - RECON GOLD SOLO AIR (2012-2016)
ns	00.4315.032.460	AM FORK SERVICE KIT, BASIC (INCLUDES DUST SEALS, FOAM RINGS,O-RING SEALS) - RECON GOLD A3(2013-2016)
	CSU	
1	11.4018.008.403	FORK CSU - SOLO AIR 29 51OFF-SET ALUMINUM TAPER DIFFUSION BLACK - RECON GOLD B1
	DAMPER REMOTES	
2	00.4318.002.009	REMOTE - ONELOC LEFT/ABOVE, RIGHT/BELOW 10MM, REMOTE ONLY (INCLUDES REMOTE, CABLE&HOUSING)-SID,REBA,REVELATION,BLUTO,SEKTOR,RECONGOLD(2013-2017)/JUDY
2	00.4318.002.010	REMOTE - ONELOC RIGHT/ABOVE, LEFT/BELOW 10MM, REMOTE ONLY (INCLUDES REMOTE, CABLE&HOUSING)-SID,REBA,REVELATION,BLUTO,SEKTOR,RECONGOLD(2013-2017)/JUDY
3	11.4308.848.000	REMOTE - POPLOC LEFT 17MM CABLE PULL - RL (PRE-2013) & ALL TK DAMPERS, (NOT COMPATIBLE WITH 2013+ MOCO)
3	11.4309.207.000	REMOTE - POPLOC RIGHT 17MM CABLE PULL - RL (PRE-2013) & ALL TK DAMPERS
4	11.4308.849.000	REMOTE - POPLOC LEFT ADJUSTABLE 17MM CABLE PULL (NOT COMPATIBLE WITH 2013+ MOCO RL) - RL (PRE-2013) & TK DAMPERS
4	11.4309.208.000	REMOTE - POPLOC RIGHT ADJUSTABLE 17MM CABLE PULL (NOT COMPATIBLE WITH 2013+ MOCO RL) - RL (PRE-2013) & TK DAMPERS
	DAMPER	
5	11.4018.009.048	FORK DAMPER ASSEMBLY - CROWN TURNKEY 26,27.5,29 80-150 (INCLUDES RIGHT SIDE INTERNALS) - SEKTOR GOLD A1-B1/RECON GOLD A1-A5
6	11.4018.009.049	FORK DAMPER ASSEMBLY - REMOTE REMOTE 17MM (POPLOC, PRE-2013 PUSHLOC) TURNKEY 26,27.5,29 80-150 (INCLUDES RIGHT SIDE INTERNALS) - SEKTOR GOLD A1-B1/RECON GOLD A1-A5
7	11.4018.088.000	FORK DAMPER ASSEMBLY - CROWN MOCO RL (INCLUDES COMPRESSION & REBOUND DAMPER, SEALHEAD, KNOBS, & SHAFT BOLT) - RECON GOLD A1-C1/SEKTOR GOLD A1-B1/SEKTOR RL C1+
8	11.4018.088.001	FORK DAMPER ASSEMBLY - REMOTE 10MM (2013+ PUSHLOC, ONELOC, TWISTLOC) MOCO RL 27.5/29 80-150MM (INCLUDES RIGHT SIDE INTERNALS)- RECON GOLD A1-C1/SEKTOR GOLD A1-B1/SEKTOR RL C1+
	KNOBS AND SPOOLS	
9	11.4015.461.010	FORK COMPRESSION DAMPER KNOB KIT - CROWN MOCO (INCLUDES SCREW) - REBA RL (2012-2016)/RECON, SEKTOR GOLD (2011-2016)
10	11.4018.082.028	FORK COMPRESSION DAMPER SPARE HOUSING STOP - FITS TK AND RL REMOTE DAMPERS (INCLUDES HOUSING STOP AND SET SCREW) - JUDY/RECON/30/35 (2020-2021)
11	11.4015.461.050	FORK COMPRESSION DAMPER KNOB KIT - CROWN TURNKEY - RECON/SEKTOR/30 GOLD/30 SILVER/XC32/XC30 A1-A3
14	11.4015.353.000	FORK DAMPER SEALHEAD ASSEMBLY - MOCO 32MM - REBA 2008, REVELATION 2006-2009,RECON 2006-2010, RECON GOLD 2011,PIKE 2005-2010
15	11.4310.645.000	FORK REBOUND DAMPER KNOB KIT - (INCLUDES ADJUSTER KNOB & BOLT) RED SHORT 26" - REBA (2009-2011), REVELATION 2009/TORA/RECON (2011-2012)/SEKTOR (2011-2012)
16	11.4015.404.010	FORK REBOUND DAMPER KNOB KIT - (INCLUDES ADJUSTER KNOB & BOLT) ALUMINUM RED LONG - (USE WITH MAXLE LOWER LEG)
	SPRING	
17	11.4309.336.000	FORK SPRING COIL ISOLATOR KIT - (INCLUDES 3 HEAT-SHRINK COIL TUBES) REDUCES NOISE AND CHATTER
18	11.4018.012.001	FORK SPRING AIR TOP CAP - 32MM (ALUMINUM UPPER TUBES ONLY) - RECON GOLD A1-A3/SEKTOR A1-B1
19	11.4015.444.010	FORK SPRING SOLO AIR ASSEMBLY - RECON XC 2010/SL/RACE, RECON GOLD A1-A3 (2011- 2017)
20	11.4018.010.040	FORK SPRING SOLO AIR ASSEMBLY - 100MM-26/27.5/29 (INCLUDES TOP CAP, AIR PISTON, SHAFT BOLT) - RECON GOLD
	MAXLE	
22	00.4318.005.002	AXLE MAXLE LITE FRONT, 15X100, LENGTH 148MM, THREAD LENGTH 9MM, THREAD PITCH M15X1.50 - REBA/REVELATION/RECON/SEKTOR/XC32/SID/SID SL/SID 35MM
23	00.4318.005.018	AXLE MAXLE STEALTH FRONT, 15X100, LENGTH 148MM, THREAD LENGTH 9MM, THREAD PITCH M15X1.50 (NOT COMPATIBLE WITH RS-1) - 15X100, SID SL, SID 35MM
ns	11.4318.004.001	AXLE MAXLE - LITE 15MM XC LEVER ASSEMBLY
	SPARES	
ns	00.4318.031.000	FORK LOWER LEG DUST SEAL INSTALLATION TOOL 32MM (FOR FLANGELESS AND FLANGED DUST SEALS)
24	11.4015.450.000	FORK SPRING TRAVEL SPACERS - ALL TRAVEL SPACER KIT (NOT COMPATIBLE WITH SID/REBA/REVELATION SOLO AIR SPRING)
25	00.4318.002.011	REMOTE UPGRADE KIT - ONELOC RIGHT/ABOVE, LEFT/BELOW 10MM MCRL DAMPER PUSH TO CLOSE (INCLUDES REMOTE, COMP DAMPER, CABLE&HOUSING)-RECONGOLD/SEKTORGOLD(2013-2016)
26	11.4308.327.002	AIR VALVE KIT - SCHRADER CORE (QTY 2) - FORKS/SHOCKS/REVERB
27	11.4015.534.010	FORK HOSE CLAMP - PIKE/LYRIK/YARI/SID/REVELATION/BOXXER/XC30/30G/30S/RECON/SEKTOR/BLUTO/REBA/35G/35S
ns	11.4307.469.000	FORK BRAKE POST KIT - STEEL (QTY 2)
28	11.4310.290.000	FORK DUST WIPER KIT - 32MM GREY (INCLUDES FLANGED DUST WIPERS & 10MM FOAM RINGS) - REVELATION/ARGYLE/SEKTOR/TORA/RECON/XC32
29	11.4310.465.000	FORK SHAFT FASTENER KIT - (INCLUDES SHAFT BOLTS & CRUSH WASHERS)
bulk	11.4015.259.000	FORK CRUSH WASHERS - 8MM (QTY 50)
bulk	11.4015.260.000	FORK CRUSH WASHER RETAINER - 8MM (QTY 50)
bulk	11.4310.695.000	FORK DUST WIPER KIT - 32MM GREY (INCLUDES FLANGED DUST WIPERS) (QTY 20) - SID/REVELATION/REBA/ARGYLE/SEKTOR/TORA/RECON/XC32
bulk	11.4310.698.000	FORK FOAM RING KIT - 32MM X 10MM (QTY 20) - REVELATION/ARGYLE/SEKTOR/TORA/RECON/XC32
bulk	11.4310.697.000	FORK FOAM RING KIT - 32MM X 3.5MM (QTY 20) - SID/REBA/PIKE 2005-2006
	TOOLS/GREASE/FLUIDS	
ns	00.4315.023.010	HIGH-PRESSURE FORK/SHOCK PUMP (300 PSI MAX) ROCKSHOX
ns	00.4315.022.010	REAR SHOCK SCHRADER VALVE REMOVAL TOOL ROCKSHOX
ns	11.4315.021.020	ROCKSHOX SUSPENSION OIL, 5WT, 120ML BOTTLE - FORK DAMPER
ns	11.4015.354.010	ROCKSHOX SUSPENSION OIL, 5WT, 1 LITER BOTTLE - FORK DAMPER
ns	11.4315.021.040	ROCKSHOX SUSPENSION OIL, 15WT, 120ML BOTTLE - LOWER LEGS
ns	11.4015.354.030	ROCKSHOX SUSPENSION OIL, 15WT, 1 LITER BOTTLE - LOWER LEGS
ns	00.4318.008.000	GREASE SRAM BUTTER 20ML SYRINGE, FRICTION REDUCING GREASE BYSLICKOLEUM - DOUBLE TIME HUB PAWLS, FORKS & REVERB SERVICE
ns	00.4318.008.001	GREASE SRAM BUTTER 1OZ CONTAINER, FRICTION REDUCING GREASE BY SLICKOLEUM - DOUBLE TIME HUB PAWLS, FORKS & REVERB SERVICE

SEKTOR RL C1 (2019-2020)

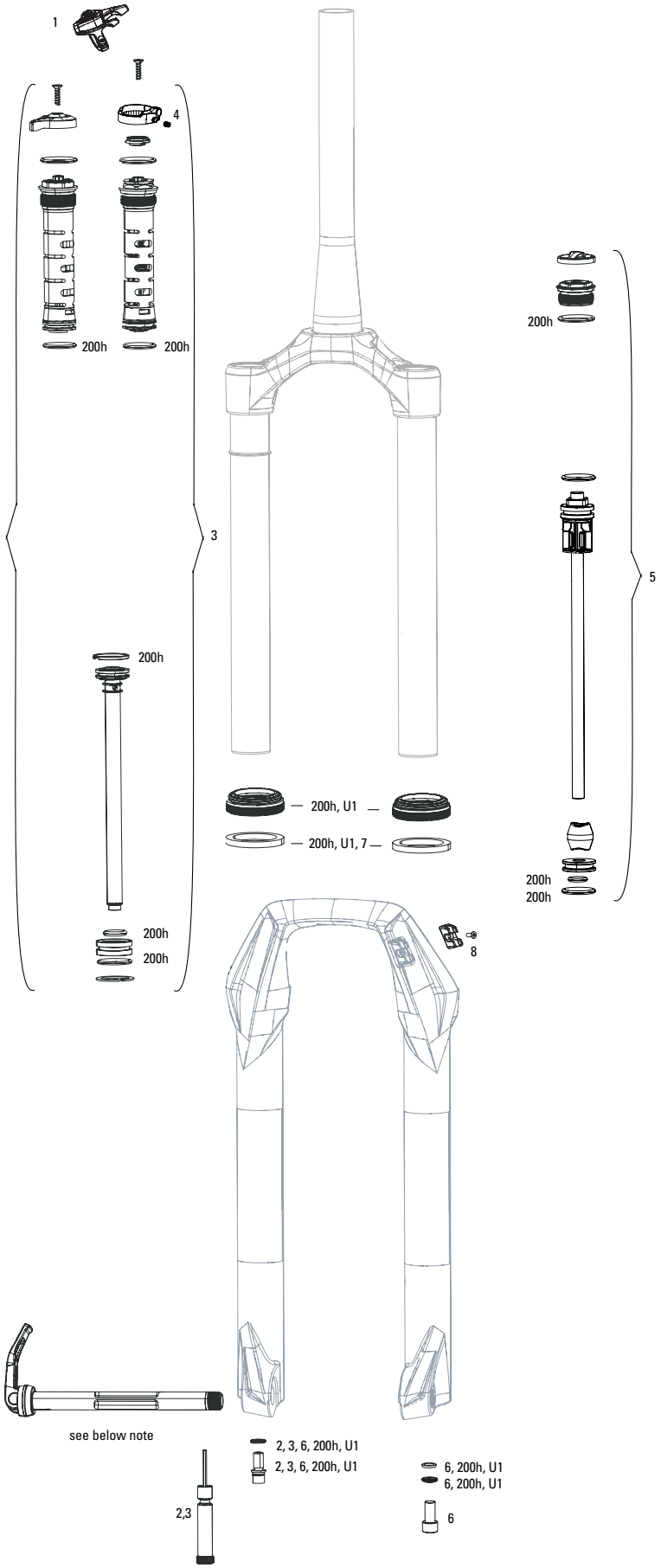

Note:
1. Decal and Maxle pages can be found in back of the catalog.

SEKTOR RL C1 (2019-2020)

	UPGRADES	
U1	00.4318.045.003	FORK DUST WIPER UPGRADE KIT - 32MM BLACK FLANGELESS ULTRA-LOW FRICTION SKF SEALS (INCLUDES DUST WIPERS & 4MM FOAM RINGS) - BLUTO/RS-1/SID B1 (2017+)/32MM BOOST™ FORKS
	SERVICE KITS	
200h	00.4315.032.653	200 HOUR/1 YEAR SERVICE KIT (INCLUDES DUST SEALS, FOAM RINGS, O-RING SEALS) - RECON GOLD RL BOOST A4 (2018+)/SEKTOR RL C1 (2019+)
	DAMPER	
1	00.4318.002.009	REMOTE - ONELOC LEFT/ABOVE, RIGHT/BELOW 10MM, REMOTE ONLY (INCLUDES REMOTE, CABLE&HOUSING)-SID,REBA,REVELATION,BLUTO,SEKTOR,RECONGOLD(2013-2017)/JUDY
1	00.4318.002.010	REMOTE - ONELOC RIGHT/ABOVE, LEFT/BELOW 10MM, REMOTE ONLY (INCLUDES REMOTE, CABLE&HOUSING)-SID,REBA,REVELATION,BLUTO,SEKTOR,RECONGOLD(2013-2017)/JUDY
2	11.4018.088.000	FORK DAMPER ASSEMBLY - CROWN MOCO RL (INCLUDES COMPRESSION & REBOUND DAMPER, SEALHEAD, KNOBS, & SHAFT BOLT) - RECON GOLD A1-C1/SEKTOR GOLD A1-B1/SEKTOR RL C1+
3	11.4018.088.001	FORK DAMPER ASSEMBLY - REMOTE 10MM (2013+ PUSHLOC, ONELOC, TWISTLOC) MOCO RL 27.5/29 80-150MM (INCLUDES RIGHT SIDE INTERNALS)- RECON GOLD A1-C1/SEKTOR GOLD A1-B1/SEKTOR RL C1+
4	11.4018.082.028	FORK COMPRESSION DAMPER SPARE HOUSING STOP - FITS TK AND RL REMOTE DAMPERS (INCLUDES HOUSING STOP AND SET SCREW) - JUDY/RECON/30/35 (2020-2021)
	SPRING	
5	11.4018.087.000	FORK SPRING DEBONAIR ASSEMBLY - 80-120MM (INCLUDES TOP CAP, DEBONAIR SPRING, TRAVEL SPACERS & SHAFT BOLT) - SEKTOR RL C1
5	11.4018.087.001	FORK SPRING DEBONAIR ASSEMBLY - 130-150MM (INCLUDES TOP CAP, DEBONAIR SPRING, TRAVEL SPACERS & SHAFT BOLT) - SEKTOR RL C1
	SPARES	
6	11.4310.465.000	FORK SHAFT FASTENER KIT - (INCLUDES SHAFT BOLTS & CRUSH WASHERS)
bulk	11.4015.259.000	FORK CRUSH WASHERS - 8MM (QTY 50)
bulk	11.4015.260.000	FORK CRUSH WASHER RETAINER - 8MM (QTY 50)
7	11.4018.028.015	FORK FOAM RING KIT - 32MM X 4MM (QTY 20) - SID RLC A1/SID XX/RL B1 (2017+)/RECON BOOST RL C1/TK B1 (2020+)
8	11.4015.534.011	FORK HOSE CLAMP - SID RLC A1/SID XX/RL B1-B4 (2017-2020) REBA A7 80-100MM (2018+)
	TOOLS/GREASE/FLUIDS	
ns	00.4318.031.000	FORK LOWER LEG DUST SEAL INSTALLATION TOOL 32MM (FOR FLANGELESS AND FLANGED DUST SEALS)
ns	00.4315.023.010	HIGH-PRESSURE FORK/SHOCK PUMP (300 PSI MAX) ROCKSHOX
ns	00.4315.022.010	REAR SHOCK SCHRADER VALVE REMOVAL TOOL ROCKSHOX
ns	11.4315.021.020	ROCKSHOX SUSPENSION OIL, 5WT, 120ML BOTTLE - FORK DAMPER
ns	11.4015.354.010	ROCKSHOX SUSPENSION OIL, 5WT, 1 LITER BOTTLE - FORK DAMPER
ns	11.4315.021.040	ROCKSHOX SUSPENSION OIL, 15WT, 120ML BOTTLE - LOWER LEGS
ns	11.4015.354.030	ROCKSHOX SUSPENSION OIL, 15WT, 1 LITER BOTTLE - LOWER LEGS
ns	00.4318.008.000	GREASE SRAM BUTTER 20ML SYRINGE, FRICTION REDUCING GREASE BYSLICKOLEUM - DOUBLE TIME HUB PAWLS, FORKS & REVERB SERVICE
ns	00.4318.008.001	GREASE SRAM BUTTER 1OZ CONTAINER, FRICTION REDUCING GREASE BY SLICKOLEUM - DOUBLE TIME HUB PAWLS, FORKS & REVERB SERVICE

SEKTOR SILVER RL/TK A2 (2017-2018)

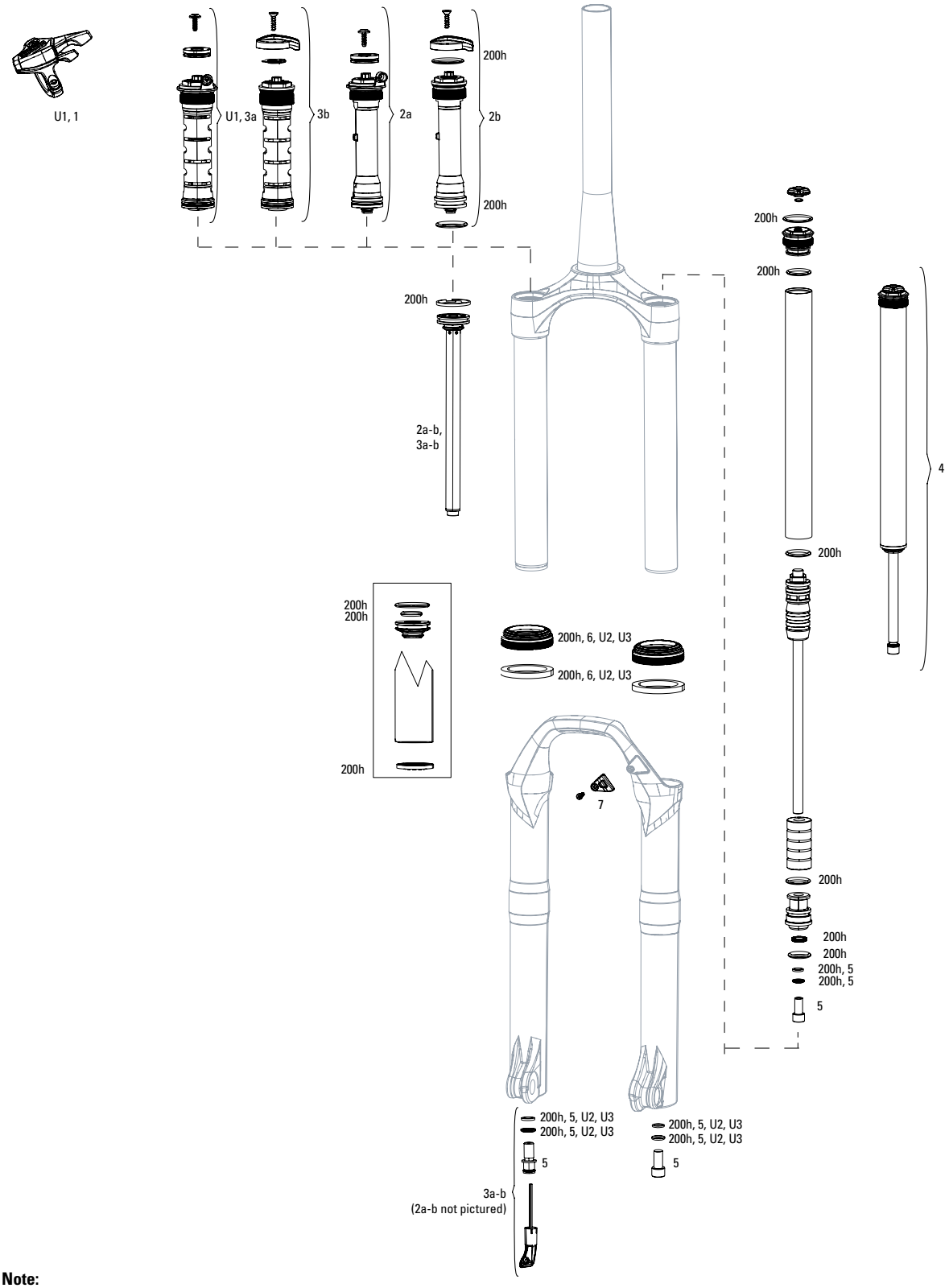

Note:

1. All basic service kits include the following replaceable wear items: o-rings, glide rings, dust seals, and foam rings.
2. Convert from Crown Adjust to Remote Adjust: Remote compression damper, remote compression adjuster spool, cable clamp and remote lever assembly.
3. Thread Pitch is 0.8mm for Recon Silver C1 and Sektor Silver A2
4. Maximum Tire Diameter: 714mm Maximum Tire Width: 81mm
5. 32mm Boost lower legs use flangless wiper seals.
6 Decal and Maxle pages can be found in back of the catalog.

SEKTOR SILVER RL/TK A2 (2017-2018)

UPGRADES		
U1	00.4318.002.015	REMOTE UPGRADE KIT - ONELOC RIGHT/ABOVE, LEFT/BELOW 10MM MCRL DAMPER PUSH TO CLOSE (INCLUDES REMOTE, COMP DAMPER, CABLE&HOUSING)-RECONSILVERB1/(SEKTORSILVER BOOST ONLY)(2017)
U2	00.4318.045.002	FORK DUST WIPER UPGRADE KIT - 32MM BLACK FLANGED LOW FRICTION SEALS (INCLUDES DUST WIPERS, 5MM & 10MM FOAM RINGS) - SID/REVELATION/REBA/ARGLE/SEKTOR/TORA/RECON/XC32
U3	00.4318.045.003	FORK DUST WIPER UPGRADE KIT - 32MM BLACK FLANGELESS ULTRA-LOW FRICTION SKF SEALS (INCLUDES DUST WIPERS & 4MM FOAM RINGS) - BLUTO/RS-1/SID B1 (2017+)/32MM BOOST™ FORKS
	SERVICE	
200h	00.4315.032.630	AM FORK SERVICE KIT, BASIC (INCLUDES DUST SEALS, FOAM RINGS,O-RING SEALS) - SEKTOR SILVER RL A2 (NON BOOST)
200h	00.4315.032.631	AM FORK SERVICE KIT, BASIC (INCLUDES DUST SEALS, FOAM RINGS,O-RING SEALS) - SEKTOR SILVER RL A2 (BOOST), RECON BOOST TK B1/RL B1 (2020+)
	DAMPER	
1	00.4318.002.009	REMOTE - ONELOC LEFT/ABOVE, RIGHT/BELOW 10MM, REMOTE ONLY (INCLUDES REMOTE, CABLE&HOUSING)-SID,REBA,REVELATION,BLUTO,SEKTOR,RECONGOLD(2013-2017)/JUDY
1	00.4318.002.010	REMOTE - ONELOC RIGHT/ABOVE, LEFT/BELOW 10MM, REMOTE ONLY (INCLUDES REMOTE, CABLE&HOUSING)-SID,REBA,REVELATION,BLUTO,SEKTOR,RECONGOLD(2013-2017)/JUDY
2a	11.4018.009.039	FORK DAMPER ASSEMBLY - REMOTE 17MM (POPLOC, PRE-2013 PUSHLOC) 80-120MM (INCLUDES RIGHT SIDE INTERNALS) - SEKTOR SILVER/XC32/RECON SILVER B1
2b	11.4018.009.038	FORK DAMPER ASSEMBLY - CROWN TURNKEY 80-120MM (INCLUDES RIGHT SIDE INTERNALS) - SEKTOR SILVER/XC32/RECON SILVER B1
3a	11.4018.009.092	FORK DAMPER ASSEMBLY - REMOTE 10MM (2013+ PUSHLOC, ONELOC, TWISTLOC) MOCO RL (THREAD PITCH 1.0MM) 130-150MM (INCLUDES RIGHT SIDE INTERNALS) - SEKTOR SILVER A2 (2017+)
3b	11.4018.009.091	FORK DAMPER ASSEMBLY - CROWN RL (THREAD PITCH 1.0MM) 130-150MM CROWN (INCLUDES RIGHT SIDE INTERNALS) - SEKTOR SILVER A2 (2017+)
	BOOST	
3a	11.4018.009.089	FORK DAMPER ASSEMBLY - CROWN RL (THREAD PITCH 0.8MM) 130-150MM (INCLUDES RIGHT SIDE INTERNALS) - (BOOST ONLY) SEKTOR SILVER A2 (2017+)/RECON RL A1-A2 (2018-2020)
3b	11.4018.009.090	FORK DAMPER ASSEMBLY - REMOTE 10MM (2013+ PUSHLOC, ONELOC, TWISTLOC) MOCO RL (.8MM) 130-150MM (RIGHT SIDE INTERNALS)- (BOOST ONLY)SEKTOR SILVER A2 (2017+)/RECON RL A1-A2 (2018+)
	SPRING INTERNALS - NON BOOST	
4	11.4018.010.105	FORK SPRING SOLO AIR ASSEMBLY - 140MM-26/27.5/29 (INCLUDES TOP CAP, AIR PISTON, SHAFT BOLT) - SEKTOR SILVER A1
	SPRING INTERNALS - BOOST	
4	11.4018.010.224	FORK SPRING SOLO AIR ASSEMBLY- 130-150MM-27.5/29 BOOST(THREAD 0.8MM)(INCLUDES TOP CAP, PISTON, SHAFT BOLT,SPACERS)RCN SILVER RL B1+/TK C1+ (2017+)/RECON RL A1-A2 BOOST(2018-2020)
	SPARES	
5	11.4310.465.000	FORK SHAFT FASTENER KIT - (INCLUDES SHAFT BOLTS & CRUSH WASHERS)
bulk	11.4015.259.000	FORK CRUSH WASHERS - 8MM (QTY 50)
bulk	11.4015.260.000	FORK CRUSH WASHER RETAINER - 8MM (QTY 50)
bulk	11.4018.028.015	FORK FOAM RING KIT - 32MM X 4MM (QTY 20) - SID RLC A1/SID XX/RL B1 (2017+)/RECON BOOST RL C1/TK B1 (2020+)
	TOOLS/GREASE/FLUIDS	
ns	00.4318.031.000	FORK LOWER LEG DUST SEAL INSTALLATION TOOL 32MM (FOR FLANGELESS AND FLANGED DUST SEALS)
ns	00.4315.023.010	HIGH-PRESSURE FORK/SHOCK PUMP (300 PSI MAX) ROCKSHOX
ns	00.4315.022.010	REAR SHOCK SCHRADER VALVE REMOVAL TOOL ROCKSHOX
ns	11.4315.021.020	ROCKSHOX SUSPENSION OIL, 5WT, 120ML BOTTLE - FORK DAMPER
ns	11.4015.354.010	ROCKSHOX SUSPENSION OIL, 5WT, 1 LITER BOTTLE - FORK DAMPER
ns	11.4315.021.040	ROCKSHOX SUSPENSION OIL, 15WT, 120ML BOTTLE - LOWER LEGS
ns	11.4015.354.030	ROCKSHOX SUSPENSION OIL, 15WT, 1 LITER BOTTLE - LOWER LEGS
ns	00.4318.008.000	GREASE SRAM BUTTER 20ML SYRINGE, FRICTION REDUCING GREASE BYSLICKOLEUM - DOUBLE TIME HUB PAWLS, FORKS & REVERB SERVICE
ns	00.4318.008.001	GREASE SRAM BUTTER 1OZ CONTAINER, FRICTION REDUCING GREASE BY SLICKOLEUM - DOUBLE TIME HUB PAWLS, FORKS & REVERB SERVICE

SEKTOR SILVER A1 (2014-2016)

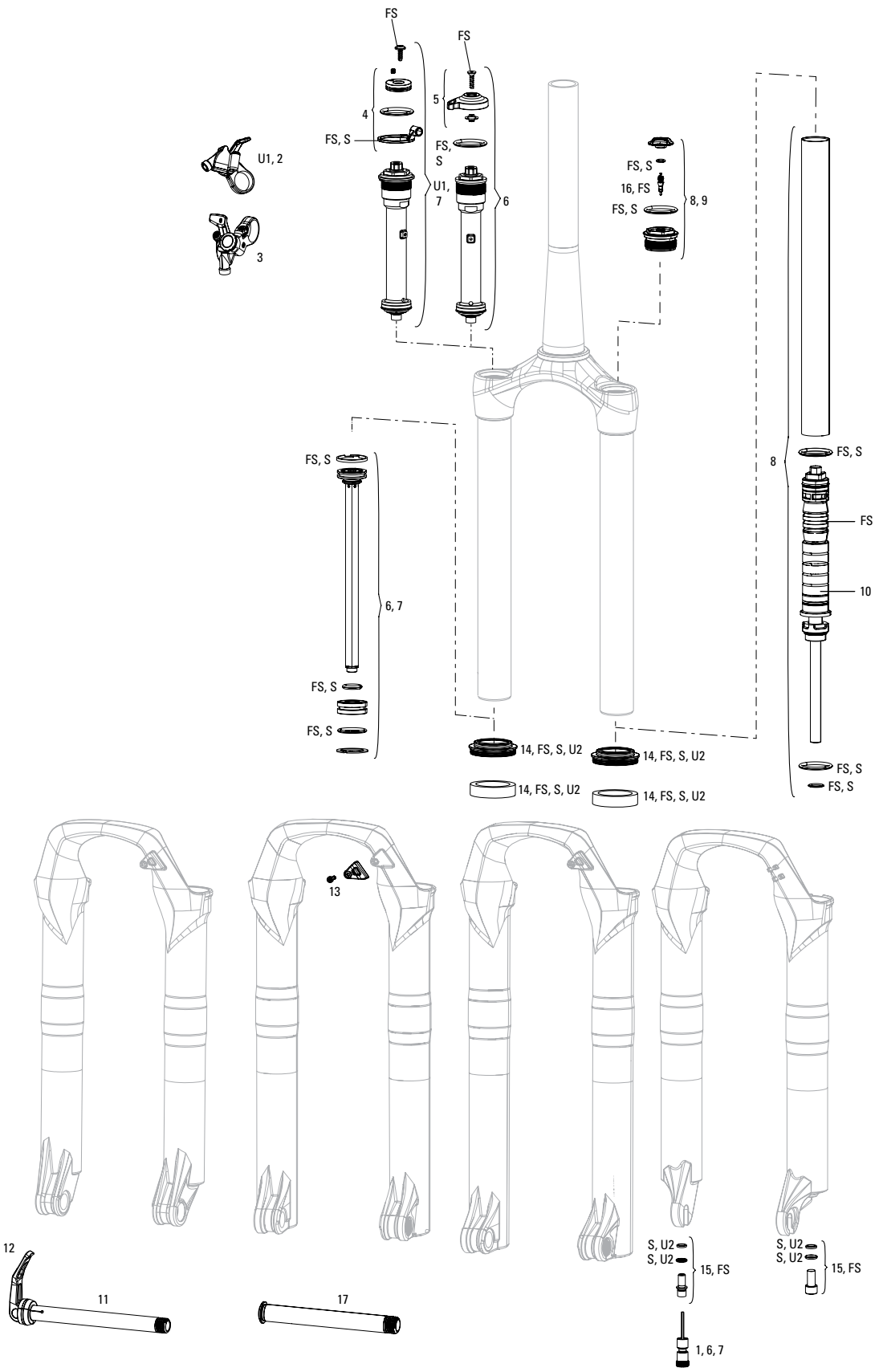

Note:

1. Full service kits include replaceable o-rings, glide rings, retaining rings, crush washers, crush washer retainers and shaft bolts/nuts. All air service kits include replacement schrader valve cores. Not all service parts are pictured. All basic service kits include the following replaceable wear items: o-rings, glide rings, dust seals, and foam rings.
2. Convert from Crown Adjust to Remote Adjust: Remote compression damper requires remote compression adjuster spool, and remote lever assembly.
3. Sektor Silver requires PopLoc or PopLoc Adjust remote; 17mm cable pull.

SEKTOR SILVER A1 (2014-2016)

	UPGRADES	
U1	00.4318.002.007	REMOTE UPGRADE KIT - TURNKEY 17MM - INCLUDES REMOTE COMPRESSION DAMPER AND POPLOC REMOTE RIGHT 32MM SEKTOR SILVER/XC32/RECON SILVER B1
U2	00.4318.045.002	FORK DUST WIPER UPGRADE KIT - 32MM BLACK FLANGED LOW FRICTION SEALS (INCLUDES DUST WIPERS, 5MM & 10MM FOAM RINGS) - SID/REVELATION/REBA/ARGLE/SEKTOR/TORA/RECON/XC32
	SERVICE	
FS	11.4018.036.000	FORK SERVICE KIT - FULL SERVICE SOLO AIR (INCLUDES AIR SEALS, DAMPER SEALS & HARDWARE) - SEKTOR SILVER A1
S	00.4315.032.470	AM FORK SERVICE KIT, BASIC (INCLUDES DUST SEALS, FOAM RINGS,O-RING SEALS) - SEKTOR SILVER SOLO AIR A1
	DAMPER	
1	11.4018.033.002	FORK REBOUND DAMPER KNOB KIT - (INCLUDES ADJUSTER KNOB) 29" - XC30A1-A3/30 GOLD A1+/JUDY GOLD A1+/30 SILVER A1, SEKTOR SILVER A1+/RECON A1+
2	11.4308.848.000	REMOTE - POPLOC LEFT 17MM CABLE PULL - RL (PRE-2013) & ALL TK DAMPERS, (NOT COMPATIBLE WITH 2013+ MOCO)
2	11.4309.207.000	REMOTE - POPLOC RIGHT 17MM CABLE PULL - RL (PRE-2013) & ALL TK DAMPERS
3	11.4308.849.000	REMOTE - POPLOC LEFT ADJUSTABLE 17MM CABLE PULL (NOT COMPATIBLE WITH 2013+ MOCO RL) - RL (PRE-2013) & TK DAMPERS
3	11.4309.208.000	REMOTE - POPLOC RIGHT ADJUSTABLE 17MM CABLE PULL (NOT COMPATIBLE WITH 2013+ MOCO RL) - RL (PRE-2013) & TK DAMPERS
4	11.4018.011.001	FORK COMPRESSION DAMPER KNOB KIT - REMOTE 17MM(POPLOC, PRE-2013 PUSHLOC) - XC32 A1-A3(2011-2015) /SEKTOR SILVER A1 (2014-2016)/RECON SILVER A1-B1(2013-2017)
5	11.4015.461.050	FORK COMPRESSION DAMPER KNOB KIT - CROWN TURNKEY - RECON/SEKTOR/30 GOLD/30 SILVER/XC32/XC30 A1-A3
6	11.4018.009.038	FORK DAMPER ASSEMBLY - CROWN TURNKEY 80-120MM (INCLUDES RIGHT SIDE INTERNALS) - SEKTOR SILVER/XC32/RECON SILVER B1
7	11.4018.009.039	FORK DAMPER ASSEMBLY - REMOTE 17MM (POPLOC, PRE-2013 PUSHLOC) 80-120MM (INCLUDES RIGHT SIDE INTERNALS) - SEKTOR SILVER/XC32/RECON SILVER B1
	SPRING	
8	11.4018.010.104	FORK SPRING SOLO AIR ASSEMBLY - 130MM-26/27.5/29 (INCLUDES TOP CAP, AIR PISTON, SHAFT BOLT) - SEKTOR SILVER A1/RECON SILVER B1
8	11.4018.010.105	FORK SPRING SOLO AIR ASSEMBLY - 140MM-26/27.5/29 (INCLUDES TOP CAP, AIR PISTON, SHAFT BOLT) - SEKTOR SILVER A1
9	11.4018.012.000	FORK SPRING AIR TOP CAP - 32 MM (STEEL UPPER TUBES ONLY) - XC32 A1-A3/RECON SILVER TK A1-B1/ARGYLE A1-A2
10	11.4018.034.000	FORK SPRING TRAVEL SPACERS - SOLO AIR (USED TO CHANGE TRAVEL) - RECON/RECON BOOST, 30 GOLD/SILVER, XC 32/30, PARAGON, SEKTOR SILVER, 35G/JUDY G
	MAXLE	
11	00.4318.005.002	AXLE MAXLE LITE FRONT, 15X100, LENGTH 148MM, THREAD LENGTH 9MM, THREAD PITCH M15X1.50 - REBA/REVELATION/RECON/SEKTOR/XC32/SID/SID SL/SID 35MM
17	00.4318.005.018	AXLE MAXLE STEALTH FRONT, 15X100, LENGTH 148MM, THREAD LENGTH 9MM, THREAD PITCH M15X1.50 (NOT COMPATIBLE WITH RS-1) - 15X100, SID SL, SID 35MM
12	11.4318.004.001	AXLE MAXLE - LITE 15MM XC LEVER ASSEMBLY
	SPARES	
13	11.4015.534.010	FORK HOSE CLAMP - PIKE/LYRIK/YARI/SID/REVELATION/BOXXER/XC30/30G/30S/RECON/SEKTOR/BLUTO/REBA/35G/35S
14	11.4310.290.000	FORK DUST WIPER KIT - 32MM GREY (INCLUDES FLANGED DUST WIPERS & 10MM FOAM RINGS) - REVELATION/ARGYLE/SEKTOR/TORA/RECON/XC32
bulk	11.4310.695.000	FORK DUST WIPER KIT - 32MM GREY (INCLUDES FLANGED DUST WIPERS) (QTY 20) - SID/REVELATION/REBA/ARGYLE/SEKTOR/TORA/RECON/XC32
bulk	11.4310.698.000	FORK FOAM RING KIT - 32MM X 10MM (QTY 20) - REVELATION/ARGYLE/SEKTOR/TORA/RECON/XC32
15	11.4310.465.000	FORK SHAFT FASTENER KIT - (INCLUDES SHAFT BOLTS & CRUSH WASHERS)
16	11.4308.327.002	AIR VALVE KIT - SCHRADER CORE (QTY 2) - FORKS/SHOCKS/REVERB
bulk	11.4015.259.000	FORK CRUSH WASHERS - 8MM (QTY 50)
bulk	11.4015.260.000	FORK CRUSH WASHER RETAINER - 8MM (QTY 50)
	TOOLS/GREASE/FLUIDS	
ns	00.4318.031.000	FORK LOWER LEG DUST SEAL INSTALLATION TOOL 32MM (FOR FLANGELESS AND FLANGED DUST SEALS)
ns	00.4315.023.010	HIGH-PRESSURE FORK/SHOCK PUMP (300 PSI MAX) ROCKSHOX
ns	00.4315.022.010	REAR SHOCK SCHRADER VALVE REMOVAL TOOL ROCKSHOX
ns	11.4315.021.020	ROCKSHOX SUSPENSION OIL, 5WT, 120ML BOTTLE - FORK DAMPER
ns	11.4015.354.010	ROCKSHOX SUSPENSION OIL, 5WT, 1 LITER BOTTLE - FORK DAMPER
ns	11.4315.021.040	ROCKSHOX SUSPENSION OIL, 15WT, 120ML BOTTLE - LOWER LEGS
ns	11.4015.354.030	ROCKSHOX SUSPENSION OIL, 15WT, 1 LITER BOTTLE - LOWER LEGS
ns	00.4318.008.000	GREASE SRAM BUTTER 20ML SYRINGE, FRICTION REDUCING GREASE BYSLICKOLEUM - DOUBLE TIME HUB PAWLS, FORKS & REVERB SERVICE
ns	00.4318.008.001	GREASE SRAM BUTTER 1OZ CONTAINER, FRICTION REDUCING GREASE BY SLICKOLEUM - DOUBLE TIME HUB PAWLS, FORKS & REVERB SERVICE

SEKTOR GOLD A1-B2 (2011-2017)

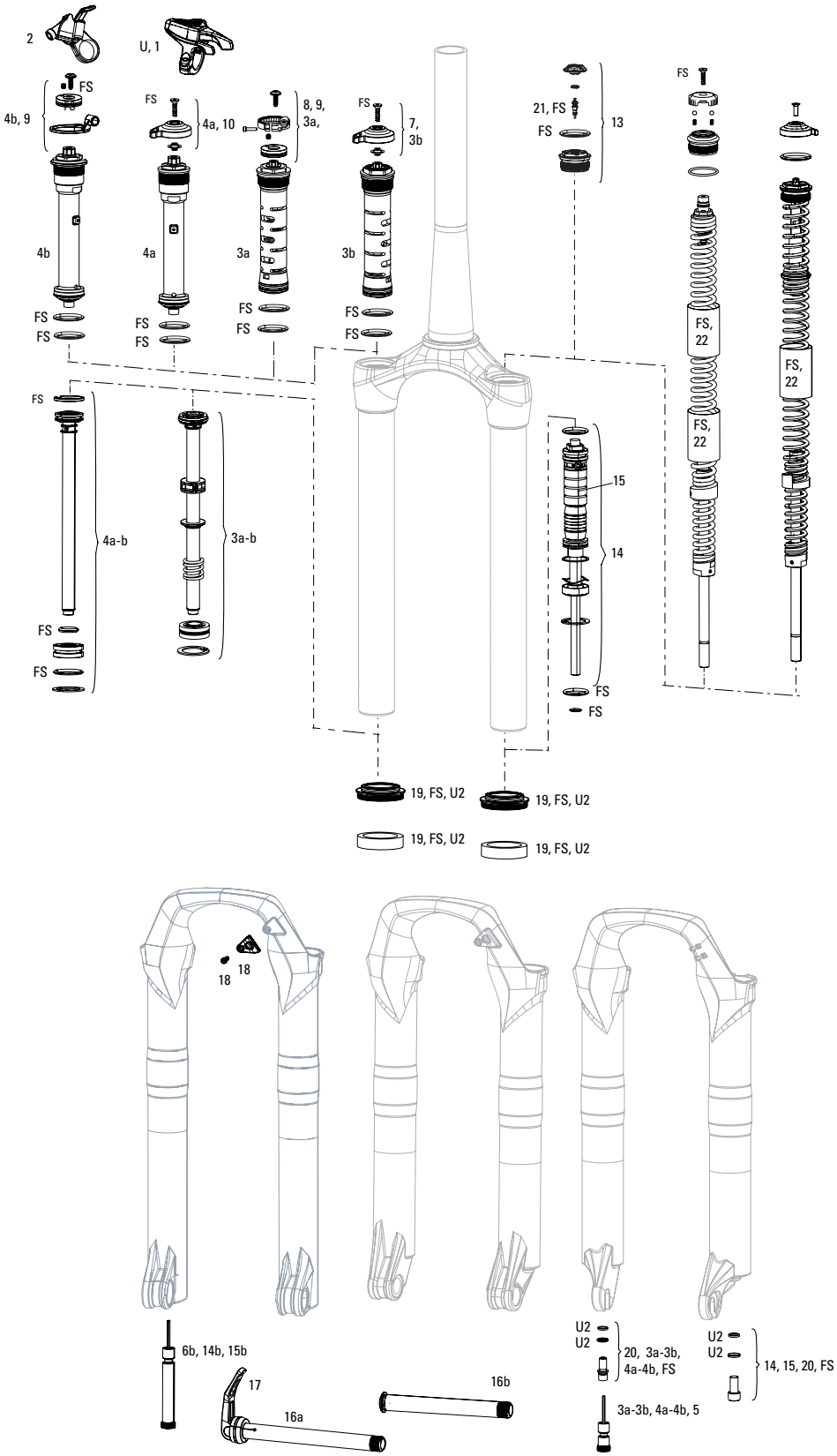

Note:

1. All basic service kits include the following replaceable wear items: o-rings, glide rings, dust seals, and foam rings.
2. Convert from Crown Adjust to Remote Adjust: Remote compression damper, remote compression adjuster spool, cable clamp and remote lever assembly.
3. Maximum Tire Diameter: 714mm Maximum Tire Width: 81mm
4. 32mm Boost lower legs use flangless wiper seals.
5. Decal pages can be found in back of the catalog.

SEKTOR GOLD A1-B2 (2011-2017)

	UPGRADES	
U	00.4318.002.011	REMOTE UPGRADE KIT - ONELOC RIGHT/ABOVE, LEFT/BELOW 10MM MCRL DAMPER PUSH TO CLOSE (INCLUDES REMOTE, COMP DAMPER, CABLE&HOUSING)-RECONGOLD/SEKTORGOLD(2013 -2016)
U2	00.4318.045.002	FORK DUST WIPER UPGRADE KIT - 32MM BLACK FLANGED LOW FRICTION SEALS (INCLUDES DUST WIPERS, 5MM & 10MM FOAM RINGS) - SID/REVELATION/REBA/ARGLE/SEKTOR/TORA/RECON/XC32
	SERVICE	
ns	11.4015.502.000	FORK SERVICE KIT - SEKTOR/ARGYLE RCT
ns	00.4315.032.050	AM FORK SERVICE KIT, BASIC (INCLUDES DUST SEALS, FOAM RINGS,O-RING SEALS) - SEKTOR TURNKEY DUAL POSITION COIL (2012)
ns	00.4315.032.060	AM FORK SERVICE KIT, BASIC (INCLUDES DUST SEALS, FOAM RINGS,O-RING SEALS) - SEKTOR RL DUAL POSITION COIL (2012-2016)
ns	00.4315.032.070	AM FORK SERVICE KIT, BASIC (INCLUDES DUST SEALS, FOAM RINGS,O-RING SEALS) - SEKTOR RL SOLO AIR (2012-2016)
ns	00.4315.032.300	AM FORK SERVICE KIT, BASIC (INCLUDES DUST SEALS, FOAM RINGS,O-RING SEALS) - SEKTOR TURNKEY SOLO AIR (2013-2016)
ns	00.4315.032.310	AM FORK SERVICE KIT, BASIC (INCLUDES DUST SEALS, FOAM RINGS,O-RING SEALS) - SEKTOR MOTION CONTROL SOLOAIR (2013-2016)
FS	11.4018.017.000	FORK SERVICE KIT - FULL SERVICE SOLO AIR (INCLUDES AIR SEALS, DAMPER SEALS & HARDWARE) - SEKTOR GOLD
	DAMPER	
1	00.4318.002.009	REMOTE - ONELOC LEFT/ABOVE, RIGHT/BELOW 10MM, REMOTE ONLY (INCLUDES REMOTE, CABLE&HOUSING)-SID,REBA,REVELATION,BLUTO,SEKTOR,RECONGOLD(2013-2017)/JUDY
1	00.4318.002.010	REMOTE - ONELOC RIGHT/ABOVE, LEFT/BELOW 10MM, REMOTE ONLY (INCLUDES REMOTE, CABLE&HOUSING)-SID,REBA,REVELATION,BLUTO,SEKTOR,RECONGOLD(2013-2017)/JUDY
2	11.4308.848.000	REMOTE - POPLOC LEFT 17MM CABLE PULL - RL (PRE-2013) & ALL TK DAMPERS, (NOT COMPATIBLE WITH 2013+ MOCO)
2	11.4309.207.000	REMOTE - POPLOC RIGHT 17MM CABLE PULL - RL (PRE-2013) & ALL TK DAMPERS
ns	11.4308.849.000	REMOTE - POPLOC LEFT ADJUSTABLE 17MM CABLE PULL (NOT COMPATIBLE WITH 2013+ MOCO RL) - RL (PRE-2013) & TK DAMPERS
ns	11.4309.208.000	REMOTE - POPLOC RIGHT ADJUSTABLE 17MM CABLE PULL (NOT COMPATIBLE WITH 2013+ MOCO RL) - RL (PRE-2013) & TK DAMPERS
3a	11.4018.009.048	FORK DAMPER ASSEMBLY - CROWN TURNKEY 26,27.5,29 80-150 (INCLUDES RIGHT SIDE INTERNALS) - SEKTOR GOLD A1-B1/RECON GOLD A1-A5
3b	11.4018.009.049	FORK DAMPER ASSEMBLY - REMOTE REMOTE 17MM (POPLOC, PRE-2013 PUSHLOC) TURNKEY 26,27.5,29 80-150 (INCLUDES RIGHT SIDE INTERNALS) - SEKTOR GOLD A1-B1/RECON GOLD A1-A5
4a	11.4018.088.000	FORK DAMPER ASSEMBLY - CROWN MOCO RL (INCLUDES COMPRESSION & REBOUND DAMPER, SEALHEAD, KNOBS, & SHAFT BOLT) - RECON GOLD A1-C1/SEKTOR GOLD A1-B1/SEKTOR RL C1+
4b	11.4018.088.001	FORK DAMPER ASSEMBLY - REMOTE 10MM (2013+ PUSHLOC, ONELOC, TWISTLOC) MOCO RL 27.5/29 80-150MM (INCLUDES RIGHT SIDE INTERNALS)- RECON GOLD A1-C1/SEKTOR GOLD A1-B1/SEKTOR RL C1+
5	11.4015.404.010	FORK REBOUND DAMPER KNOB KIT - (INCLUDES ADJUSTER KNOB & BOLT) ALUMINUM RED LONG - (USE WITH MAXLE LOWER LEG)
6	11.4015.318.000	FORK REBOUND DAMPER KNOB KIT - (INCLUDES ADJUSTER KNOB & BOLT) LONG/BOLT (ALUMINUM RED) - TORA/RECON/REBA/REVELATION 27/29"
7	11.4015.461.010	FORK COMPRESSION DAMPER KNOB KIT - CROWN MOCO (INCLUDES SCREW) - REBA RL (2012-2016)/RECON, SEKTOR GOLD (2011-2016)
8	11.4015.461.020	FORK COMPRESSION DAMPER KNOB KIT - REMOTE 10/17MM TK/MOCO (INCLUDES SPOOL, CABLE STOP, SCREW) - REBA RL (2012 2016)/RECON, SEKTOR GOLD (2011-2016)
9	11.4018.011.002	FORK COMPRESSION DAMPER KNOB KIT - REMOTE 10MM (2013+ PUSHLOC, ONELOC, TWISTLOC) TURNKEY - RECON GOLD A1-A3 (2011-2017)/SEKTOR A1-B1 (2011-2018)/REBA A1-A5 (2012-2017)
10	11.4015.461.050	FORK COMPRESSION DAMPER KNOB KIT - CROWN TURNKEY - RECON/SEKTOR/30 GOLD/30 SILVER/XC32/XC30 A1-A3
	SPRING	
13	11.4018.012.001	FORK SPRING AIR TOP CAP - 32MM (ALUMINUM UPPER TUBES ONLY) - RECON GOLD A1-A3/SEKTOR A1-B1
14	11.4018.010.045	FORK SPRING SOLO AIR ASSEMBLY - 150MM-26/29 (INCLUDES TOP CAP, AIR PISTON, SHAFT BOLT) - SEKTOR
15	11.4015.450.000	FORK SPRING TRAVEL SPACERS - ALL TRAVEL SPACER KIT (NOT COMPATIBLE WITH SID/REBA/REVELATION SOLO AIR SPRING)
	MAXLE	
16a	00.4318.005.002	AXLE MAXLE LITE FRONT, 15X100, LENGTH 148MM, THREAD LENGTH 9MM, THREAD PITCH M15X1.50 - REBA/REVELATION/RECON/SEKTOR/XC32/SID/SID SL/SID 35MM
16a	00.4315.013.010	AXLE MAXLE STEALTH FRONT, 15X100, LENGTH 148MM, THREAD LENGTH 9MM, THREAD PITCH M15X1.50 (NOT COMPATIBLE WITH RS-1) - 15X100, SID SL, SID 35MM
16b	00.4318.005.018	AXLE MAXLE STEALTH FRONT, 15X100, LENGTH 148MM, THREAD LENGTH 9MM, THREAD PITCH M15X1.50 (NOT COMPATIBLE WITH RS-1) - 15X100, SID SL, SID 35MM
17	11.4318.004.001	AXLE MAXLE - LITE 15MM XC LEVER ASSEMBLY
	SPARES	
18	11.4015.534.010	FORK HOSE CLAMP - PIKE/LYRIK/YARI/SID/REVELATION/BOXXER/XC30/30G/30S/RECON/SEKTOR/BLUTO/REBA/35G/35S
19	11.4310.290.000	FORK DUST WIPER KIT - 32MM GREY (INCLUDES FLANGED DUST WIPERS & 10MM FOAM RINGS) - REVELATION/ARGYLE/SEKTOR/TORA/RECON/XC32
bulk	11.4310.695.000	FORK DUST WIPER KIT - 32MM GREY (INCLUDES FLANGED DUST WIPERS) (QTY 20) - SID/REVELATION/REBA/ARGYLE/SEKTOR/TORA/RECON/XC32
bulk	11.4310.698.000	FORK FOAM RING KIT - 32MM X 10MM (QTY 20) - REVELATION/ARGYLE/SEKTOR/TORA/RECON/XC32
20	11.4310.465.000	FORK SHAFT FASTENER KIT - (INCLUDES SHAFT BOLTS & CRUSH WASHERS)
bulk	11.4015.259.000	FORK CRUSH WASHERS - 8MM (QTY 50)
bulk	11.4015.260.000	FORK CRUSH WASHER RETAINER - 8MM (QTY 50)
21	11.4308.327.002	AIR VALVE KIT - SCHRADER CORE (QTY 2) - FORKS/SHOCKS/REVERB
22	11.4309.336.000	FORK SPRING COIL ISOLATOR KIT - (INCLUDES 3 HEAT-SHRINK COIL TUBES) REDUCES NOISE AND CHATTER
	TOOLS/GREASE/FLUIDS	
ns	00.4318.031.000	FORK LOWER LEG DUST SEAL INSTALLATION TOOL 32MM (FOR FLANGELESS AND FLANGED DUST SEALS)
ns	00.4315.023.010	HIGH-PRESSURE FORK/SHOCK PUMP (300 PSI MAX) ROCKSHOX
ns	00.4315.022.010	REAR SHOCK SCHRADER VALVE REMOVAL TOOL ROCKSHOX
ns	11.4315.021.020	ROCKSHOX SUSPENSION OIL, 5WT, 120ML BOTTLE - FORK DAMPER
ns	11.4015.354.010	ROCKSHOX SUSPENSION OIL, 5WT, 1 LITER BOTTLE - FORK DAMPER
ns	11.4315.021.040	ROCKSHOX SUSPENSION OIL, 15WT, 120ML BOTTLE - LOWER LEGS
ns	11.4015.354.030	ROCKSHOX SUSPENSION OIL, 15WT, 1 LITER BOTTLE - LOWER LEGS
ns	00.4318.008.000	GREASE SRAM BUTTER 20ML SYRINGE, FRICTION REDUCING GREASE BYSLICKOLEUM - DOUBLE TIME HUB PAWLS, FORKS & REVERB SERVICE
ns	00.4318.008.001	GREASE SRAM BUTTER 1OZ CONTAINER, FRICTION REDUCING GREASE BY SLICKOLEUM - DOUBLE TIME HUB PAWLS, FORKS & REVERB SERVICE

35 GOLD RL A1-A2 (2020-2021)

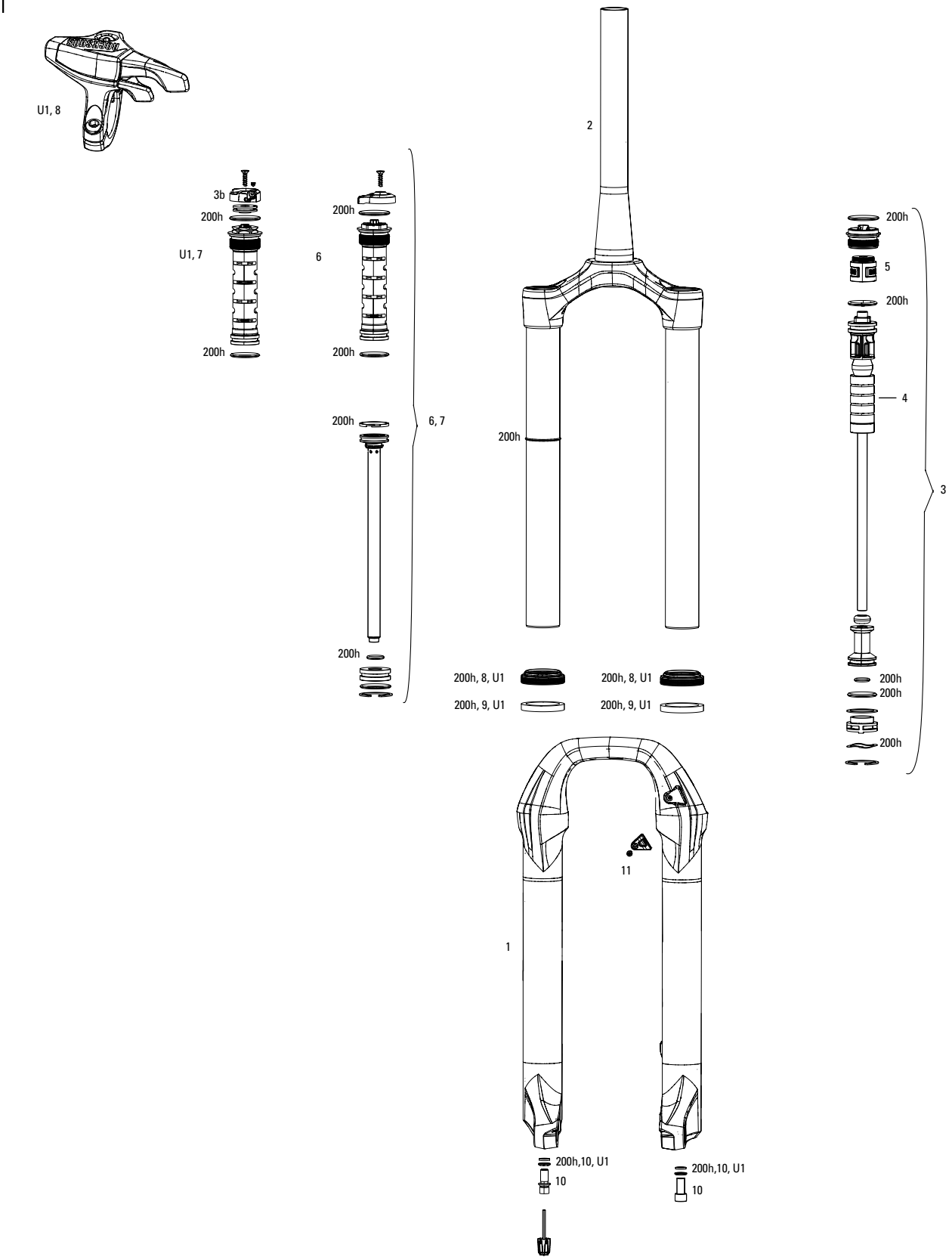

35 GOLD RL A1-A2 (2020-2021)

	UPGRADES	
U1	00.4318.002.021	REMOTE UPGRADE KIT - ONELOC RIGHT/ABOVE, LEFT/BELOW 10MM MC RL DAMPER PUSH TO LOCK (INCLUDES REMOTE, COMP DAMPER, CABLE&HOUSING) - 35 GOLD A1+ (2020+)
U2	00.4318.045.004	FORK DUST WIPER UPGRADE KIT - 35MM BLACK FLANGELESS ULTRA-LOW FRICTION SKF SEALS (INCLUDES DUST WIPERS, 4MM & 6MM FOAM RINGS-PIKE/LYRIKB1/YARI/REVELATION/BOXXER/DOMAIN/35/SID35MM
	SERVICE	
200h	00.4318.025.050	200 HOUR/1 YEAR SERVICE KIT (INCLUDES DUST SEALS, FOAM RINGS, O-RINGS SEALS) - 35 GOLD RL A1 (2020+)
	SPARES	
1	11.4018.091.004	FORK LOWER LEG - (DECALS NOT INCLUDED) 27 15X110 BOOST™ GLOSS BLACK - 35G A1(2020+)
1	11.4018.091.005	FORK LOWER LEG - (DECALS NOT INCLUDED) 29 15X110 BOOST™ GLOSS BLACK - 35G A1(2020+)
2	11.4018.090.008	FORK CSU - DEBONAIR 27.5 BOOST™ 44 OFF-SET ALUMINUM TAPER GLOSS BLACK (NO GRADIENTS) 35G A1 (2020+)
2	11.4018.090.009	FORK CSU - DEBONAIR BOOST™ 29 51 OFF-SET ALUMINUM TAPER GLOSS BLACK (NO GRADIENTS) 35G A1 (2020+)
	SPRING INTERNALS	
3	11.4018.087.005	FORK SPRING DEBONAIR ASSEMBLY - 100-160MM (INCLUDES TOP CAP, DEBONAIR SPRING, TRAVEL SPACERS & SHAFT BOLT) - 35G A1 (2020+)
3b	11.4018.082.028	FORK COMPRESSION DAMPER SPARE HOUSING STOP - FITS TK AND RL REMOTE DAMPERS (INCLUDES HOUSING STOP AND SET SCREW) - JUDY/RECON/30/35 (2020-2021)
	TRAVEL SPACERS & TOKENS	
4	11.4018.034.000	FORK SPRING TRAVEL SPACERS - SOLO AIR (USED TO CHANGE TRAVEL) - RECON/RECON BOOST, 30 GOLD/SILVER, XC 32/30, PARAGON, SEKTOR SILVER, 35G/JUDY G
5	11.4018.032.003	FORK SPRING BOTTOMLESS TOKENS - SOLO AIR/DEBONAIR (QTY 5) - SID/REBA/REVELATION/RS-1/BLUTO/ARGYLE RCT SOLO AIR/35G
	DAMPER INTERNALS	
6	11.4018.088.002	FORK DAMPER ASSEMBLY - MOCO (INCLUDES COMPRESSION & REBOUND DAMPER, SEALHEAD, KNOBS, & SHAFT BOLT) -35G RL CRN A1 (2020+)
7	11.4018.088.003	FORK DAMPER ASSEMBLY - MOCO (INCLUDES COMPRESSION & REBOUND DAMPER, SEALHEAD, KNOBS, & SHAFT BOLT) -35G RL RMT A1 (2020+)
8	00.4318.002.009	REMOTE - ONELOC LEFT/ABOVE, RIGHT/BELOW 10MM, REMOTE ONLY (INCLUDES REMOTE, CABLE&HOUSING)-SID,REBA,REVELATION,BLUTO,SEKTOR,RECONGOLD(2013-2017)/JUDY
8	00.4318.002.010	REMOTE - ONELOC RIGHT/ABOVE, LEFT/BELOW 10MM, REMOTE ONLY (INCLUDES REMOTE, CABLE&HOUSING)-SID,REBA,REVELATION,BLUTO,SEKTOR,RECONGOLD(2013-2017)/JUDY
	SPARES	
bulk	11.4015.259.000	FORK CRUSH WASHERS - 8MM (QTY 50)
bulk	11.4015.260.000	FORK CRUSH WASHER RETAINER - 8MM (QTY 50)
9	11.4018.028.005	FORK FOAM RING KIT - 35MM X 6MM (QTY 20) - PIKE/LYRIK B1/YARI/BOXXER/DOMAIN DUAL CROWN
10	11.4310.465.000	FORK SHAFT FASTENER KIT - (INCLUDES SHAFT BOLTS & CRUSH WASHERS)
11	11.4015.534.010	FORK HOSE CLAMP - PIKE/LYRIK/YARI/SID/REVELATION/BOXXER/XC30/30G/30S/RECON/SEKTOR/BLUTO/REBA/35G/35S
	TOOLS & GREASE	
ns	00.4318.032.000	FORK LOWER LEG DUST SEAL INSTALLATION TOOL 35MM (FOR FLANGELESS AND FLANGED DUST SEALS)
ns	11.4015.354.010	ROCKSHOX SUSPENSION OIL, 5WT, 1 LITER BOTTLE - FORK DAMPER
ns	11.4315.021.020	ROCKSHOX SUSPENSION OIL, 5WT, 120ML BOTTLE - FORK DAMPER
ns	11.4315.021.040	ROCKSHOX SUSPENSION OIL, 15WT, 120ML BOTTLE - LOWER LEGS
ns	11.4015.354.030	ROCKSHOX SUSPENSION OIL, 15WT, 1 LITER BOTTLE - LOWER LEGS
ns	00.4318.008.000	GREASE SRAM BUTTER 20ML SYRINGE, FRICTION REDUCING GREASE BYSLICKOLEUM - DOUBLE TIME HUB PAWLS, FORKS & REVERB SERVICE
ns	00.4318.008.001	GREASE SRAM BUTTER 10Z CONTAINER, FRICTION REDUCING GREASE BY SLICKOLEUM - DOUBLE TIME HUB PAWLS, FORKS & REVERB SERVICE
ns	00.4315.023.010	HIGH-PRESSURE FORK/SHOCK PUMP (300 PSI MAX) ROCKSHOX
ns	00.4315.023.040	HIGH-PRESSURE FORK/SHOCK PUMP (300 PSI MAX) ROCKSHOX DIGITALGAUGE

35 SILVER R/TK A1 (2021)

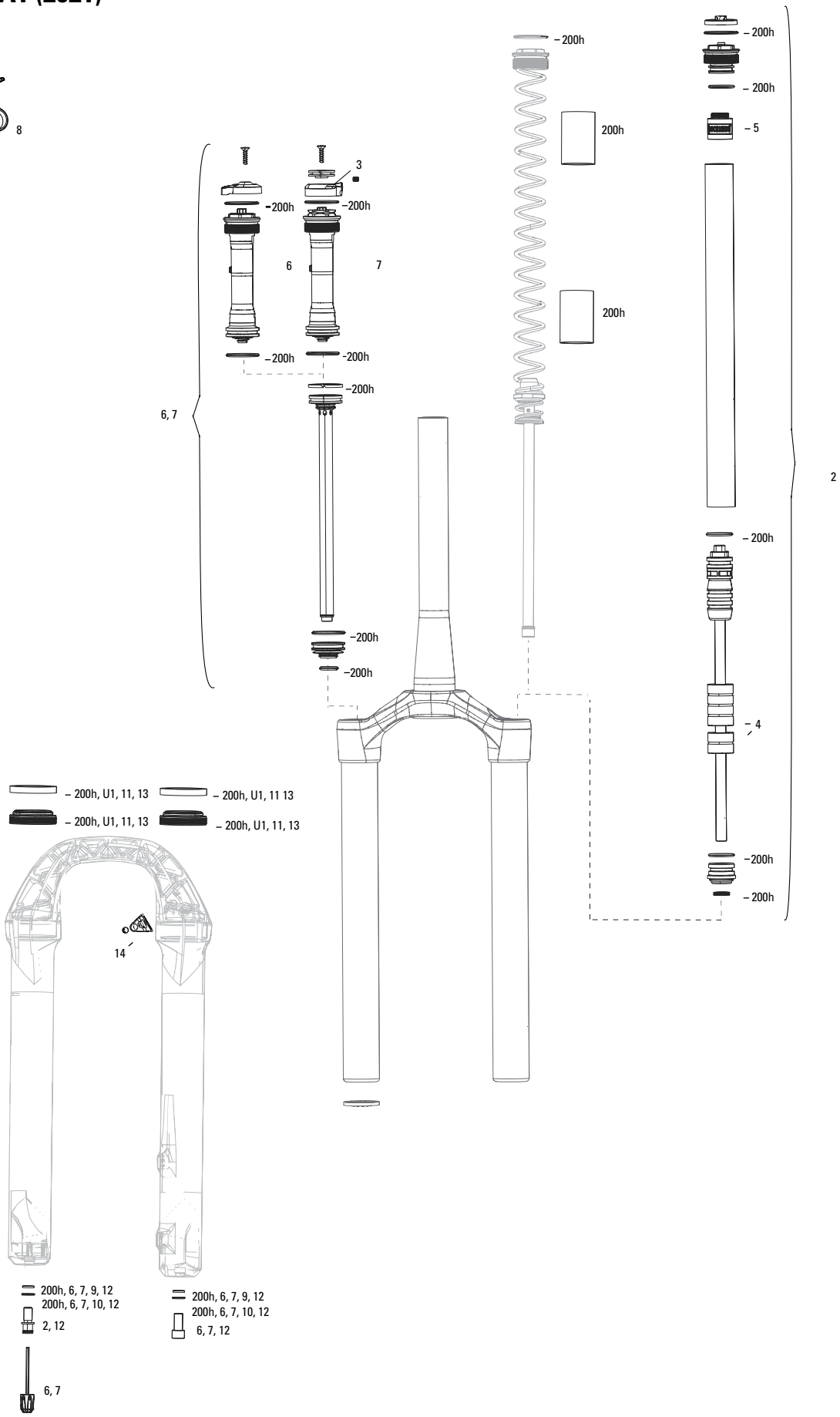

35 SILVER R/TK A1 (2021)

	UPGRADES	
U1	00.4318.045.004	FORK DUST WIPER UPGRADE KIT - 35MM BLACK FLANGELESS ULTRA-LOW FRICTION SKF SEALS (INCLUDES DUST WIPERS, 4MM & 6MM FOAM RINGS-PIKE/LYRIKB1/YARI/REVELATION/BOXXER/DOMAIN/35/SID35MM
	SERVICE	
200h	00.4318.025.150	200 HOUR/1 YEAR SERVICE KIT (INCLUDES DUST SEALS, FOAM RINGS, O-RINGS SEALS) - 35 SILVER R/TK A1 (2021)
	SPRING INTERNALS	
2	11.4018.103.008	FORK SPRING SOLO AIR ASSEMBLY - 100-160MM (INCLUDES TOP CAP, SOLO AIR SPRING, TRAVEL SPACERS & SHAFT BOLT) - 35S A1 (2021)
	TRAVEL SPACERS & TOKENS	
4	11.4018.034.000	FORK SPRING TRAVEL SPACERS - SOLO AIR (USED TO CHANGE TRAVEL) - RECON/RECON BOOST, 30 GOLD/SILVER, XC 32/30, PARAGON, SEKTOR SILVER, 35G/JUDY G
5	11.4018.114.000	FORK SPRING BOTTOMLESS TOKENS - 35MM STEEL TUBE SOLO AIR (QTY 3) - 35 SILVER A1 (2021)
	DAMPER INTERNALS	
3	11.4018.082.028	FORK COMPRESSION DAMPER SPARE HOUSING STOP - FITS TK AND RL REMOTE DAMPERS (INCLUDES HOUSING STOP AND SET SCREW) - JUDY/RECON/30/35 (2020-2021)
6	11.4018.104.019	FORK DAMPER ASSEMBLY - CROWN TURNKEY 100-160MM (INCLUDES RIGHT SIDE INTERNALS) - 35 SILVER A1 (2021)
7	11.4018.104.020	FORK DAMPER ASSEMBLY - REMOTE 17MM (POPLOC, PRE-2013 PUSHLOC) TURNKEY 100-160MM (INCLUDES RIGHT SIDE INTERNALS) - 35 SILVER A1 (2021)
8	11.4308.848.000	REMOTE - POPLOC LEFT 17MM CABLE PULL - RL (PRE-2013) & ALL TK DAMPERS, (NOT COMPATIBLE WITH 2013+ MOCO)
8	11.4309.207.000	REMOTE - POPLOC RIGHT 17MM CABLE PULL - RL (PRE-2013) & ALL TK DAMPERS
8	11.4308.849.000	REMOTE - POPLOC LEFT ADJUSTABLE 17MM CABLE PULL (NOT COMPATIBLE WITH 2013+ MOCO RL) - RL (PRE-2013) & TK DAMPERS
8	11.4309.208.000	REMOTE - POPLOC RIGHT ADJUSTABLE 17MM CABLE PULL (NOT COMPATIBLE WITH 2013+ MOCO RL) - RL (PRE-2013) & TK DAMPERS
	SPARES	
9	11.4015.259.000	FORK CRUSH WASHERS - 8MM (QTY 50)
10	11.4015.260.000	FORK CRUSH WASHER RETAINER - 8MM (QTY 50)
11	11.4018.028.013	FORK DUST WIPER KIT - 35MM BLACK LOW FRICTION SKF (INCLUDES FLANGELESS DUST WIPERS & 6MM FOAM RINGS) - PIKE/LYRIK B1/YARI/BOXXER/DOMAIN DUAL CROWN
bulk	11.4018.028.014	FORK DUST WIPER KIT - 35MM BLACK LOW FRICTION SKF (INCLUDES FLANGELESS DUST WIPERS) (QTY 20) - PIKE/LYRIK B1/YARI/BOXXER/DOMAIN/REVELATION 35MM/35G
12	11.4310.465.000	FORK SHAFT FASTENER KIT - (INCLUDES SHAFT BOLTS & CRUSH WASHERS)
13	11.4018.028.005	FORK FOAM RING KIT - 35MM X 6MM (QTY 20) - PIKE/LYRIK B1/YARI/BOXXER/DOMAIN DUAL CROWN
14	11.4015.534.010	FORK HOSE CLAMP - PIKE/LYRIK/YARI/SID/REVELATION/BOXXER/XC30/30G/30S/RECON/SEKTOR/BLUTO/REBA/35G/35S
	TOOLS & GREASE	
ns	00.4318.032.000	FORK LOWER LEG DUST SEAL INSTALLATION TOOL 35MM (FOR FLANGELESS AND FLANGED DUST SEALS)
ns	11.4015.354.010	ROCKSHOX SUSPENSION OIL, 5WT, 1 LITER BOTTLE - FORK DAMPER
ns	11.4315.021.020	ROCKSHOX SUSPENSION OIL, 5WT, 120ML BOTTLE - FORK DAMPER
ns	11.4315.021.040	ROCKSHOX SUSPENSION OIL, 15WT, 120ML BOTTLE - LOWER LEGS
ns	11.4015.354.030	ROCKSHOX SUSPENSION OIL, 15WT, 1 LITER BOTTLE - LOWER LEGS
ns	00.4318.008.000	GREASE SRAM BUTTER 20ML SYRINGE, FRICTION REDUCING GREASE BYSLICKOLEUM - DOUBLE TIME HUB PAWLS, FORKS & REVERB SERVICE
ns	00.4318.008.001	GREASE SRAM BUTTER 1OZ CONTAINER, FRICTION REDUCING GREASE BY SLICKOLEUM - DOUBLE TIME HUB PAWLS, FORKS & REVERB SERVICE
ns	00.4315.023.010	HIGH-PRESSURE FORK/SHOCK PUMP (300 PSI MAX) ROCKSHOX
ns	00.4315.023.040	HIGH-PRESSURE FORK/SHOCK PUMP (300 PSI MAX) ROCKSHOX DIGITALGAUGE

BLUTO A1-A4 (2015-2021)

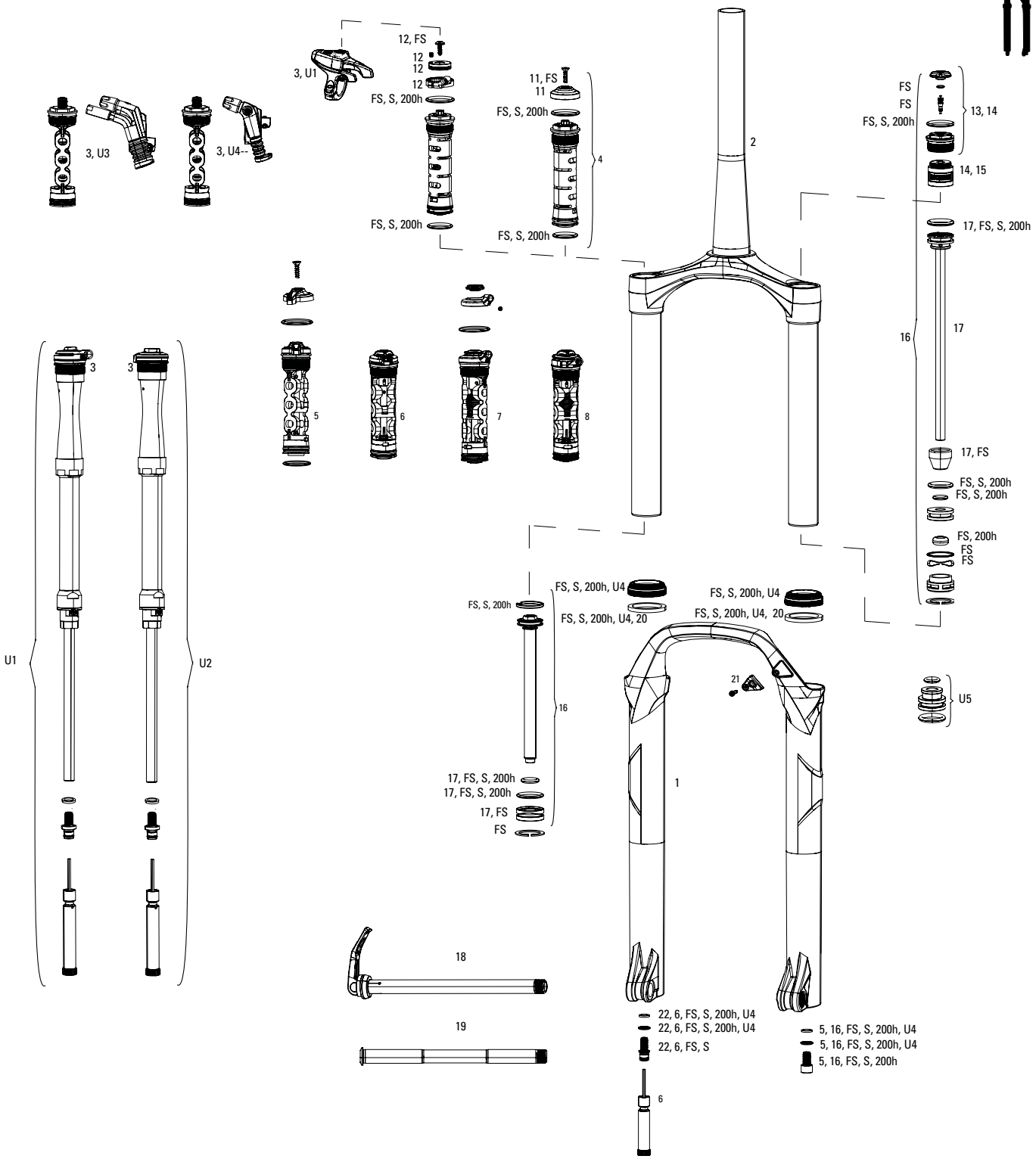

Notes:

1. Full service kits include replaceable o-rings, glide rings, retaining rings, crush washers, crush washer retainers and shaft bolts/nuts. All air service kits include replacement schrader valve cores. Not all service parts are pictured. All basic service kits include the following replaceable wear items: o-rings, glide rings, dust seals, and foam rings.
2. Rebound damper and spring shaft kits include crush washers, crush washer retainers and shaft bolts, as well as upper tube retaining rings and rebound adjuster knob.
3. Convert from Crown Adjust to Remote Adjust: Use remote upgrade kit.
4. Decal pages can be found in back of the catalog.

BLUTO A1-A4 (2015-2021)

UPGRADE

U1	00.4018.783.011	DAMPER UPGRADE KIT - CHARGER RLC,120 MAX TRAVEL, REMOTE (INCLUDES RIGHT SIDE INTERNALS & ONELOC REMOTE) - SID27/29(A2-A4/2012-2016),SID120(B1-B4/2020,REBA27/29(A1+/2012+)/BLUTOA1+
U2	00.4018.783.003	DAMPER UPGRADE KIT - CHARGER2 RLC CROWN 120MM MAX TRAVEL (INCLUDES COMPLETE RIGHT SIDE INTERNALS) - SID27/29(A2-A4/2012-2016),SID120(B1-B4/2020,REBA27/29(A1+/2012+)/BLUTOA1+
U3	00.4318.004.001	REMOTE UPGRADE KIT - XLOC FULL SPRINT - INCLUDES MOTION CONTROL X DNA COMP DAMPER, REAR SHOCK HYDRAULIC HOSE, BLEED SYRINGES, LEFT, MMX, BLACK - SIDB (2011-2016)
U3	00.4318.004.002	REMOTE UPGRADE KIT - XLOC FULL SPRINT - INCLUDES MOTION CONTROL X DNA COMP DAMPER, REAR SHOCK HYDRAULIC HOSE, BLEED SYRINGES, RIGHT, MMX, BLACK - SIDB (2011-2016)
U4	00.4318.045.003	FORK DUST WIPER UPGRADE KIT - 32MM BLACK FLANGELESS ULTRA-LOW FRICTION SKF SEALS (INCLUDES DUST WIPERS & 4MM FOAM RINGS) - BLUTO/RS-1/SID B1 (2017+)/32MM BOOST™ FORKS
U5	11.4018.096.002	FORK SPRING SEALHEAD - 32MM DEBONAIR BLACK (REPLACES FLOATING SEALHEAD, BASEPLATE & WAVE WASHER) SID A1-A4(2011-2016)/REBA A2+(2013+)/BLUTO A1+(2015+)

SERVICE

200h	00.4315.032.640	200 HOUR/1 YEAR SERVICE KIT (INCLUDES DUST SEALS, FOAM RINGS, O-RING SEALS) - BLUTO RL/RCT3 (2017+)
FS	11.4018.052.000	FORK SERVICE KIT - FULL SERVICE SOLO AIR (INCLUDES AIR SEALS, DAMPER SEALS & HARDWARE) - BLUTO A1
S	00.4315.032.490	AM FORK SERVICE KIT, BASIC (INCLUDES DUST SEALS, FOAM RINGS,O-RING SEALS) - BLUTO A1
ns	00.4018.783.011	DAMPER UPGRADE KIT - CHARGER RLC,120 MAX TRAVEL, REMOTE (INCLUDES RIGHT SIDE INTERNALS & ONELOC REMOTE) - SID27/29(A2-A4/2012-2016),SID120(B1-B4/2020,REBA27/29(A1+/2012+)/BLUTOA1+
ns	00.4018.783.003	DAMPER UPGRADE KIT - CHARGER2 RLC CROWN 120MM MAX TRAVEL (INCLUDES COMPLETE RIGHT SIDE INTERNALS) - SID27/29(A2-A4/2012-2016),SID120(B1-B4/2020,REBA27/29(A1+/2012+)/BLUTOA1+

LOWER LEGS

1	11.4018.006.213	FORK LOWER LEG - (DECALS NOT INCLUDED) 26 15X100 DIFFUSION BLACK - BLUTO A1

CSU

2	11.4018.008.346	FORK CSU - SOLO AIR 26 51 OFF-SET ALUMINUM TAPER DIFFUSION BLACK - BLUTO A1

DAMPER

3	00.4318.002.009	REMOTE - ONELOC LEFT/ABOVE, RIGHT/BELOW 10MM, REMOTE ONLY (INCLUDES REMOTE, CABLE&HOUSING)-SID,REBA,REVELATION,BLUTO,SEKTOR,RECONGOLD(2013-2017)/JUDY
3	00.4318.002.010	REMOTE - ONELOC RIGHT/ABOVE, LEFT/BELOW 10MM, REMOTE ONLY (INCLUDES REMOTE, CABLE&HOUSING)-SID,REBA,REVELATION,BLUTO,SEKTOR,RECONGOLD(2013-2017)/JUDY
4	11.4015.544.330	FORK COMPRESSION DAMPER - CROWN, MOCO RL (INCLUDES COMPRESSION KNOB & SCREW) - BLUTO A1/ REBA A7 80-100MM / 120MM(2018+)
5	11.4015.544.010	FORK COMPRESSION DAMPER - CROWN MOCO DNA (INCLUDES COMPRESSION KNOB, GATE KNOB & BOLT) - SID/REBA RL(120MM ONLY) A1-A3 2012-2016
6	11.4015.544.050	FORK COMPRESSION DAMPER - CROWN ADJUST MOCO DNA (INCLUDES COMPRESSION KNOB, GATE KNOB & BOLT) - SIDB/REBA RLT (120MM ONLY) A1A3 (2012-2016)
6	11.4015.544.270	FORK COMPRESSION DAMPER - CROWN, MOCO DNA RCT3 (INCLUDES COMPRESSION KNOB, GATE KNOB & BOLT) - SID BLACK A3 2014-2016
7	11.4015.544.230	FORK COMPRESSION DAMPER - REMOTE 10MM (2013+ PUSHLOC, ONELOC, TWISTLOC) MOCO RL DNA, BLACK (INCLUDES SPOOL & CABLE CLAMP) - SIDB/REBA A2-A3 (2013-2016)
8	11.4015.544.240	FORK COMPRESSION DAMPER - REMOTE 10MM (2013+ PUSHLOC, ONELOC, TWISTLOC) MOCO RTL DNA , BLACK (INCLUDES SPOOL & CABLE CLAMP) - SIDB/REBA A2-A3 (2013-2016)
9	11.4018.025.011	FORK REBOUND DAMPER - (INCLUDES SHAFT BOLT & SEALHEAD) - RAPID RECOVERY REBA 27/29 A5, BLUTO26 A1-A3/REBA A7 80-100MM/120MM (2018+)
10	11.4015.353.010	FORK DAMPER SEALHEAD ASSEMBLY - MOCO 32MM - SIDA 2009-2014, SIDB 2011-2013, REBA 2009-PRESENT, REVELATION2009-2013, BLUTO RL 2015-PRESENT
11	11.4015.547.110	FORK COMPRESSION DAMPER KNOB KIT - CROWN MOCO DNA (INCLUDES KNOB & SCREW) - REBA/BLUTO
11	11.4015.547.100	FORK COMPRESSION DAMPER KNOB KIT - CROWN CHARGER RCT3 (INCLUDES KNOB & SCREW) - SID A/REVELATION A1-A3, BLUTO A1 (2012-2016)
12	11.4018.011.002	FORK COMPRESSION DAMPER KNOB KIT - REMOTE 10MM (2013+ PUSHLOC, ONELOC, TWISTLOC) TURNKEY - RECON GOLD A1-A3 (2011-2017)/SEKTOR A1-B1 (2011-2018)/REBA A1-A5 (2012-2017)

SPRING

13	11.4018.012.006	FORK SPRING AIR TOP CAP - 32MM (ALUMINUM UPPER TUBES ONLY, BOTTOMLESS TOKEN COMPATIBLE) - REBA A1-A5/SIDA1-A4/REVELATION A1-A4/RS-1 A+/BLUTO A1+/ARGYLE A1+
14	11.4018.032.002	FORK SPRING AIR TOP CAP - 32MM SOLO AIR/DEBONAIR (INCLUDES 5 TOKENS, INTERNALLY THREADED AIR CAP) REBA/SID/REVELATION/RS-1/BLUTO/ARGYLE RCT
15	11.4018.032.003	FORK SPRING BOTTOMLESS TOKENS - SOLO AIR/DEBONAIR (QTY 5) - SID/REBA/REVELATION/RS-1/BLUTO/ARGYLE RCT SOLO AIR/35G
16	11.4018.010.141	FORK SPRING SOLO AIR ASSEMBLY - 100MM-26 (INCLUDES TOP CAP, 2 BOTTOMLESS TOKENS, SOLO AIR SPRING & SHAFT BOLT) - BLUTO A1-A2 (2015- 2019)
16	11.4018.010.143	FORK SPRING SOLO AIR ASSEMBLY - 120MM-26 (INCLUDES TOP CAP, 4 BOTTOMLESS TOKENS, SOLO AIR SPRING & SHAFT BOLT) - BLUTO A1-A2 (2015- 2019)
17	11.4018.026.015	FORK SPRING SOLO AIR SHAFT - 100MM-26 - BLUTO A1-A2 (2015-2019)
17	11.4018.026.016	FORK SPRING SOLO AIR SHAFT - 110MM-26 - BLUTO A1-A2 (2015-2019)
17	11.4018.026.017	FORK SPRING SOLO AIR SHAFT - 120MM-26 - BLUTO A1-A2 (2015-2019)

MAXLE

18	00.4318.005.003	AXLE MAXLE LITE FRONT, 15X150, LENGTH 198MM, THREAD LENGTH 9MM, THREAD PITCH M15X1.50 - BLUTO A1
19	00.4318.005.020	AXLE MAXLE STEALTH FRONT, 15X150, LENGTH 198MM, THREAD LENGTH 9MM, THREAD PITCH M15X1.50 - BLUTO

SPARES

20	11.4015.496.010	FORK FOAM RING KIT - 32MM X 5MM (QTY 20) - SID A1-A3 /REBA A2-A3/BLUTO A1/SID SL C1 (2021)
21	11.4015.534.010	FORK HOSE CLAMP - PIKE/LYRIK/YARI/SID/REVELATION/BOXXER/XC30/30G/30S/RECON/SEKTOR/BLUTO/REBA/35G/35S
22	11.4015.403.050	FORK SHAFT FASTENER KIT - (INCLUDES SHAFT BOLTS & CRUSH WASHERS) - BLUTO A1
bulk	11.4015.259.000	FORK CRUSH WASHERS - 8MM (QTY 50)
bulk	11.4015.260.000	FORK CRUSH WASHER RETAINER - 8MM (QTY 50)
ns	11.4308.327.002	AIR VALVE KIT - SCHRADER CORE (QTY 2) - FORKS/SHOCKS/REVERB

TOOLS/GREASE/FLUIDS

ns	00.4318.031.000	FORK LOWER LEG DUST SEAL INSTALLATION TOOL 32MM (FOR FLANGELESS AND FLANGED DUST SEALS)
ns	00.4315.022.010	REAR SHOCK SCHRADER VALVE REMOVAL TOOL ROCKSHOX
ns	00.4315.023.010	HIGH-PRESSURE FORK/SHOCK PUMP (300 PSI MAX) ROCKSHOX
ns	00.4315.023.040	HIGH-PRESSURE FORK/SHOCK PUMP (300 PSI MAX) ROCKSHOX DIGITALGAUGE
ns	11.4315.021.020	ROCKSHOX SUSPENSION OIL, 5WT, 120ML BOTTLE - FORK DAMPER
ns	11.4015.354.010	ROCKSHOX SUSPENSION OIL, 5WT, 1 LITER BOTTLE - FORK DAMPER
ns	11.4315.021.040	ROCKSHOX SUSPENSION OIL, 15WT, 120ML BOTTLE - LOWER LEGS
ns	11.4015.354.030	ROCKSHOX SUSPENSION OIL, 15WT, 1 LITER BOTTLE - LOWER LEGS
23	00.4318.012.001	FORK LOWER LEG DUST SEAL INSTALLATION TOOL (32MM) - BLUTO/RS1/SID B1/32MM BOOST™ FORKS
ns	00.4318.008.000	GREASE SRAM BUTTER 20ML SYRINGE, FRICTION REDUCING GREASE BYSLICKOLEUM - DOUBLE TIME HUB PAWLS, FORKS & REVERB SERVICE
ns	00.4318.008.001	GREASE SRAM BUTTER 1OZ CONTAINER, FRICTION REDUCING GREASE BY SLICKOLEUM - DOUBLE TIME HUB PAWLS, FORKS & REVERB SERVICE

REBA 26 A1-A2 (2020)

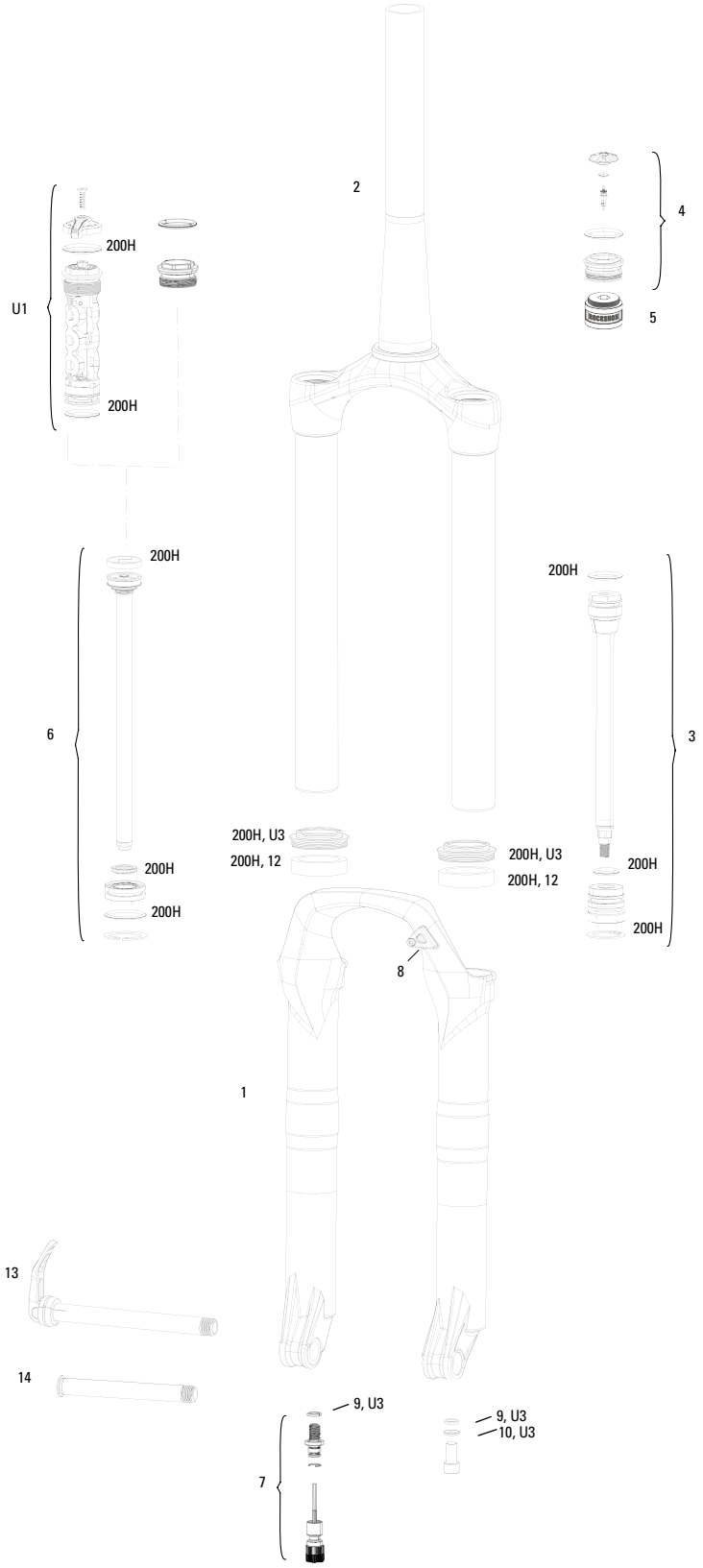

Note:

1. 200h/1 year service kits include replaceable rebound damper sealheads, o-rings, glide rings, crush washers, crush washer retainers and wiper seals.
2. Rebound damper and spring shaft kits include crush washers, crush washer retainers and shaft bolts, as well as upper tube retaining rings and rebound adjuster knob.

REBA 26 A1-A2 (2020-2021)

	UPGRADE	
U1	11.4015.544.090	FORK COMPRESSION DAMPER - CROWN MOCO DNA (INCLUDES COMPRESSION KNOB & SCREW) - REVELATION RL A1-A3 (2012-2016) REBA (2009-2011), REBA 26 (2020+)
ns	11.4018.096.002	FORK SPRING SEALHEAD - 32MM DEBONAIR BLACK (REPLACES FLOATING SEALHEAD, BASEPLATE & WAVE WASHER) SID A1-A4(2011-2016)/REBA A2+(2013+)/BLUTO A1+(2015+)
U3	00.4318.045.002	FORK DUST WIPER UPGRADE KIT - 32MM BLACK FLANGED LOW FRICTION SEALS (INCLUDES DUST WIPERS, 5MM & 10MM FOAM RINGS) - SID/REVELATION/REBA/ARGLE/SEKTOR/TORA/RECON/XC32
	SERVICE	
200h	00.4315.032.634	200 HOUR/1 YEAR SERVICE KIT (INCLUDES DUST SEALS, FOAM RINGS, O-RING SEALS) - REBA A7 130-150MM (STANDARD) (2018+), REBA 26 80-140MM (2020+)
	LOWER LEG	
1	11.4018.006.181	FORK LOWER LEG - (DECALS NOT INCLUDED) REVELATION 26 15X100 BLACK - REVELATION A1-A3 (2010-2017), REBA 26 (2020+)
1	11.4018.006.183	FORK LOWER LEG - (DECALS NOT INCLUDED) REVELATION 26 15X100 DIFFUSION BLACK - REVELATION A1-A3 (2010-2017), REBA 26 (2020+)
	CSU	
2	11.4018.102.001	FORK CSU - SOLO AIR 26 40 OFF-SET ALUMINUM TAPER BLACK 80-100MM - REBA 26 (2020+)
2	11.4018.102.000	FORK CSU - SOLO AIR 26 40 OFF-SET ALUMINUM TAPER BLACK 120-140MM (NO GRADIENTS) - REBA 26 (2020+)
	SPRING	
3	11.4018.103.000	FORK SPRING SOLO AIR ASSEMBLY - 120MM 26 (INCLUDES TOP CAP, AIR PISTON, SHAFT BOLT) - REBA 26 120MM (2020+)
3	11.4018.103.001	FORK SPRING SOLO AIR ASSEMBLY - 100MM 26 (INCLUDES TOP CAP, AIR PISTON, SHAFT BOLT) - REBA 26 100MM (2020+)
3	11.4018.103.002	FORK SPRING SOLO AIR ASSEMBLY - 80MM 26 (INCLUDES TOP CAP, AIR PISTON, SHAFT BOLT) - REBA 26 80MM (2020+)
4	11.4018.012.011	FORK SPRING AIR TOP CAP - 32MM SPLINE (INCLUDES TOP CAP, VALVE COVER, USES CASSETTE TOOL) - SID B1-B4 (2017-2020)/SID SL C1 (2021)/REBA A7 (2018+), REBA 26 (2020+)
5	11.4018.032.003	FORK SPRING BOTTOMLESS TOKENS - SOLO AIR/DEBONAIR (QTY 5) - SID/REBA/REVELATION/RS-1/BLUTO/ARGYLE RCT SOLO AIR/35G
	DAMPER	
6	11.4018.025.021	FORK REBOUND DAMPER - (INCLUDES SHAFT BOLT & SEALHEAD) - REVELATION A5 (2017+) REBA A7 130-150MM (2018+), REBA 26 (2020+)
7	11.4015.404.010	FORK REBOUND DAMPER KNOB KIT - (INCLUDES ADJUSTER KNOB & BOLT) ALUMINUM RED LONG - (USE WITH MAXLE LOWER LEG)
	SPARES	
8	11.4015.534.010	FORK HOSE CLAMP - PIKE/LYRIK/YARI/SID/REVELATION/BOXXER/XC30/30G/30S/RECON/SEKTOR/BLUTO/REBA/35G/35S
ns	11.4308.327.002	AIR VALVE KIT - SCHRADER CORE (QTY 2) - FORKS/SHOCKS/REVERB
9	11.4015.259.000	FORK CRUSH WASHERS - 8MM (QTY 50)
10	11.4015.260.000	FORK CRUSH WASHER RETAINER - 8MM (QTY 50)
ns	00.4318.031.000	FORK LOWER LEG DUST SEAL INSTALLATION TOOL 32MM (FOR FLANGELESS AND FLANGED DUST SEALS)
12	11.4310.698.000	FORK FOAM RING KIT - 32MM X 10MM (QTY 20) - REVELATION/ARGYLE/SEKTOR/TORA/RECON/XC32
13	00.4318.005.002	AXLE MAXLE LITE FRONT, 15X100, LENGTH 148MM, THREAD LENGTH 9MM, THREAD PITCH M15X1.50 - REBA/REVELATION/RECON/SEKTOR/XC32/SID/SID SL/SID 35MM
14	00.4318.005.018	AXLE MAXLE STEALTH FRONT, 15X100, LENGTH 148MM, THREAD LENGTH 9MM, THREAD PITCH M15X1.50 (NOT COMPATIBLE WITH RS-1) - 15X100, SID SL, SID 35MM
	TOOLS/GREASE/FLUIDS	
ns	00.4318.031.000	FORK LOWER LEG DUST SEAL INSTALLATION TOOL 32MM (FOR FLANGELESS AND FLANGED DUST SEALS)
ns	00.4315.022.010	REAR SHOCK SCHRADER VALVE REMOVAL TOOL ROCKSHOX
ns	00.4315.023.010	HIGH-PRESSURE FORK/SHOCK PUMP (300 PSI MAX) ROCKSHOX
ns	00.4318.008.000	GREASE SRAM BUTTER 20ML SYRINGE, FRICTION REDUCING GREASE BYSLICKOLEUM - DOUBLE TIME HUB PAWLS, FORKS & REVERB SERVICE
ns	00.4318.008.001	GREASE SRAM BUTTER 1OZ CONTAINER, FRICTION REDUCING GREASE BY SLICKOLEUM - DOUBLE TIME HUB PAWLS, FORKS & REVERB SERVICE
ns	00.4318.012.003	FORK TOP CAP/CASSETTE TOOL (FOR SRAM/SHIMANO CASSETTES) - PIKE, LYRIK, SID, REVELATION, REBA AND PARAGON FORKS
ns	00.4318.018.000	ROCKSHOX SUSPENSION CLEANER 16.9 OZ. (FOR USE WITH ALL SUSPENSION PRODUCTS)
ns	11.4015.354.010	ROCKSHOX SUSPENSION OIL, 5WT, 1 LITER BOTTLE - FORK DAMPER
ns	11.4015.354.030	ROCKSHOX SUSPENSION OIL, 15WT, 1 LITER BOTTLE - LOWER LEGS
ns	11.4315.021.020	ROCKSHOX SUSPENSION OIL, 5WT, 120ML BOTTLE - FORK DAMPER
ns	11.4315.021.040	ROCKSHOX SUSPENSION OIL, 15WT, 120ML BOTTLE - LOWER LEGS

REBA 80-100MM A7-A8 (2018-2019)

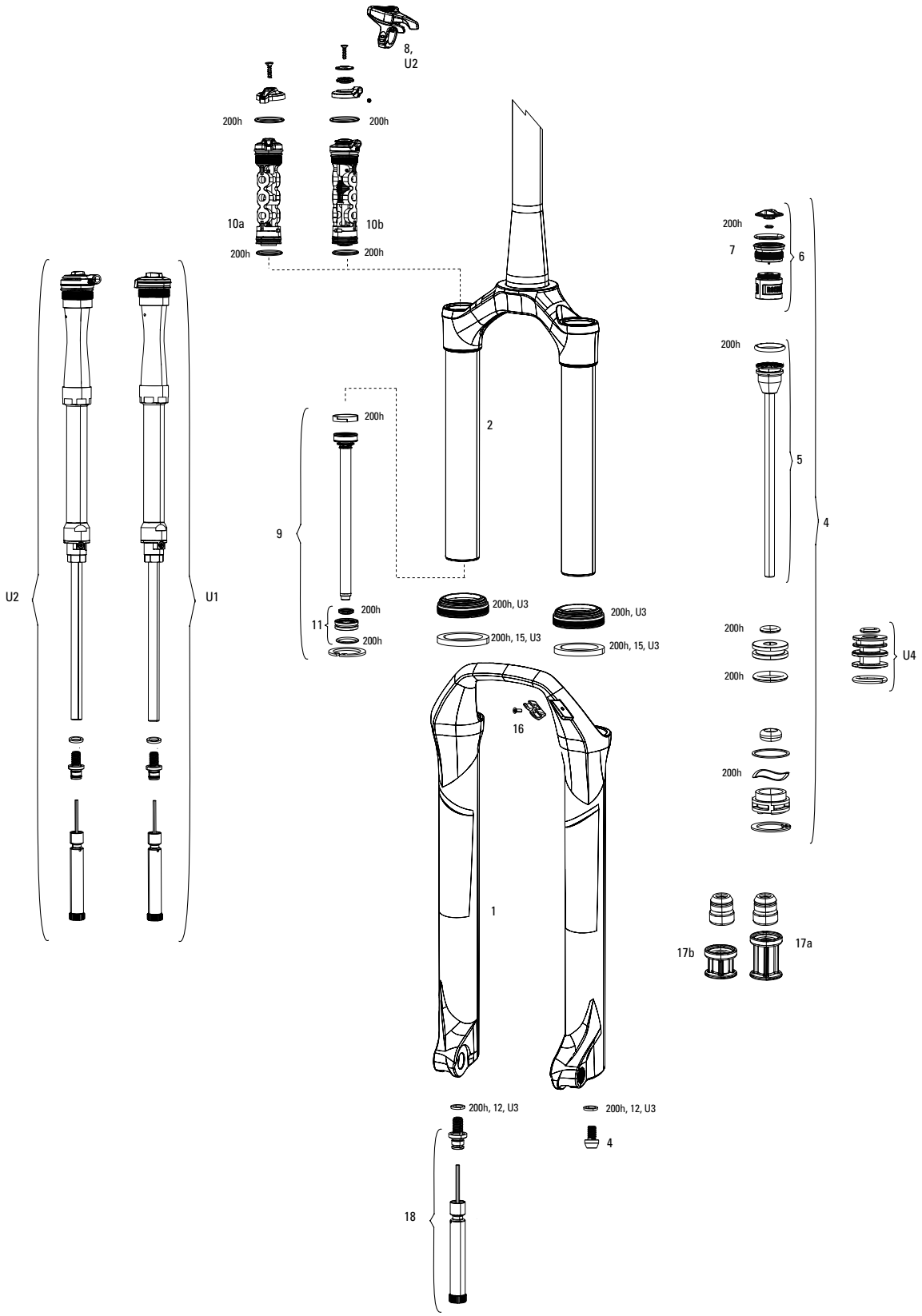

Note:

1. 2017 SID models use a hour based service interval, see www.sram.com/service for more info.
2. Convert from Crown Adjust to Remote Adjust: Remote compression damper requires remote compression adjuster spool, cable clamp and remote lever assembly.
3. Solo Air internals require Solo Air CSU; Solo Air internals are not compatible with Dual Air CSU. Dual Air internals require Dual Air CSU; Dual Air internals are not compatible with Solo Air CSU.
4. REBA chassis and internals may be travel-specific. See part kit descriptions for identification.
5. Decal and Maxle pages can be found in back of the catalog.
6. SID B1 / Reba A7 100mm max travel has 80mm and 100mm gradients ; SID B1 / Reba A7 120mm max travel has 80mm and 120mm gradients

REBA 80-100MM A7-A8 (2018-2019)

	UPGRADE	
U1	00.4018.783.009	DAMPER UPGRADE KIT - CHARGER RLC,100 MAX TRAVEL, CROWN ADJUST (INCLUDES COMPLETE RIGHT SIDE INTERNALS) - SID RLC (A1-B1/2017-2019)/SID RL,XX,WC(B1+/ 2017+)/REBA RL(A7+/2018+)
U2	00.4018.783.010	DAMPER UPGRADE KIT - CHARGER RLC,100 MAX TRAVEL, REMOTE (INCLUDES RIGHT SIDE INTERNALS & ONELOC REMOTE) - SID RLC (A1-B1/2017-2019)/SID RL,XX,WC(B1+/ 2017+)/REBA RL(A7+/2018+)
U3	00.4318.045.003	FORK DUST WIPER UPGRADE KIT - 32MM BLACK FLANGELESS ULTRA-LOW FRICTION SKF SEALS (INCLUDES DUST WIPERS & 4MM FOAM RINGS) - BLUTO/RS-1/SID B1 (2017+)/32MM BOOST™ FORKS
U4	11.4018.096.002	FORK SPRING SEALHEAD - 32mm DEBONAIR BLACK (REPLACES FLOATING SEALHEAD, BASEPLATE & WAVE WASHER) SID A1-A4(2011-2016)/REBA A2+(2013+)/BLUTO A1+(2015+)
	SERVICE	
200h	00.4315.032.632	200 HOUR/1 YEAR SERVICE KIT (INCLUDES DUST SEALS, FOAM RINGS, O-RING SEALS) - REBA A7 80-100MM (BOOST™& STANDARD) 120MM (BOOST) (2018+)
	LOWER LEG	
1	11.4018.006.256	FORK LOWER LEG - (DECALS NOT INCLUDED) 29 15X100 BLACK - SID RLC A1/SID XX/RL B1 (2017+) REBA 80-100MM A7 (2018+)
1	11.4018.006.258	FORK LOWER LEG - (DECALS NOT INCLUDED) 29 15X100 DIFFUSION BLACK - SID RLC A1/SID XX/RL B1 (2017+) REBA 80-100MM A7 (2018+)
1	11.4018.006.261	FORK LOWER LEG - (DECALS NOT INCLUDED) 27 15X100 DIFFUSION BLACK - SID RLC A1/SID XX/RL B1 (2017+) REBA 80-100MM A7 (2018+)
1	11.4018.006.259	FORK LOWER LEG - (DECALS NOT INCLUDED) 27 15X100 BLACK - SID RLC A1/SID XX/RL B1 (2017+) REBA 80-100MM A7 (2018+)
	LOWER LEG - BOOST	
1	11.4018.006.262	FORK LOWER LEG - (DECALS NOT INCLUDED) 29 15X110 BOOST™ BLACK - SID RLC A1/SID XX/RL B1 (2017+) REBA 80-100MM A7 (2018+) SID SELECT/SELECT+ B4 80-100MM (2020+)
1	11.4018.006.264	FORK LOWER LEG - (DECALS NOT INCLUDED) 29 15X110 BOOST™ DIFFUSION BLACK - SID RLC A1/SID XX/RL B1 (2017+) REBA A7 (2018+) SID SELECT/SELECT+ B4 80-100MM (2020+)
1	11.4018.006.267	FORK LOWER LEG - (DECALS NOT INCLUDED) 27 15X110 BOOST™ DIFFUSION BLACK - SID RLC A1/SID XX/RL B1 (2017+) REBA A7 (2018+) SID SELECT/SELECT+ B4 80-100MM (2020+)
	CSU	
2	11.4018.008.464	FORK CSU - SOLO AIR 27 42 OFF-SET ALUMINUM TAPER BLACK (NO GRADIENTS) - SID RLC A1/SID XX/RL B1 (2017+) REBA A7 80-100 MM (2018+)
2	11.4018.008.467	FORK CSU - SOLO AIR 29 46 OFF-SET ALUMINUM TAPER BLACK (NO GRADIENTS) - SID RLC A1/SID XX/RL B1 (2017+) REBA A7 80-100 MM (2018+)
2	11.4018.008.469	FORK CSU - SOLO AIR 29 46 OFF-SET ALUMINUM TAPER DIFFUSION BLACK (NO GRADIENTS) - SID RLC A1/SID XX/RL B1 (2017+) REBA A7 80-100MM (2018+)
ns	11.4018.008.470	FORK CSU - SOLO AIR 29 51 OFF-SET ALUMINUM TAPER BLACK (NO GRADIENTS) - SID RLC A1/SID XX/RL B1 (2017+) REBA A7 80-100 MM (2018+)
ns	11.4018.008.472	FORK CSU - SOLO AIR 29 51 OFF-SET ALUMINUM TAPER DIFFUSION BLACK (NO GRADIENTS) - SID RLC A1/SID XX/RL B1 (2017+) REBA A7 80-100MM (2018+)
	CSU - BOOST	
2	11.4018.008.473	FORK CSU - SOLO AIR 27 BOOST™ 42 OFF-SET ALUMINUM TAPER BLACK (NO GRADIENTS) - SID RLCA1/SID XX/RL B1 (2017+) REBA A780-100MM (2018+)
2	11.4018.008.475	FORK CSU - SOLO AIR 27 BOOST™ 42 OFF-SET ALUMINUM TAPER DIFFUSION BLACK (NO GRADIENTS) SID RLC A1/SID XX/RL B1 (2017+) REBA A7 80-100MM (2018+)
2	11.4018.008.476	FORK CSU - SOLO AIR 2927+ BOOST™ 51 OFF-SET ALUMINUM TAPER BLACK (NO GRADIENTS) - SID RLC A1/SID XX/RL B1 (2017+) REBA A7 80-100MM (2018+)
2	11.4018.008.478	FORK CSU - SOLO AIR 2927+ BOOST™ 51 OFF-SET ALUMINUM TAPER DIFFUSION BLACK (NO GRADIENTS) - SID RLC A1/SID XX/RL B1 (2017+) REBA A7 80-100MM (2018+)
	SPRING	
4	11.4018.010.205	FORK SPRING SOLO AIR ASSEMBLY - 100MM-29 (INCLUDES TOP CAP, AIR PISTON, SHAFT BOLT) - SID RLC A1/ SID XX/RL B1 (201 7+)/REBA A7 80-100MM (2018+)
4	11.4018.010.206	FORK SPRING SOLO AIR ASSEMBLY - 100MM-27.5 (INCLUDES TOP CAP, AIR PISTON, SHAFT BOLT) - SID RLC A1/ SID XX/RL B1 (201 7+)/REBA A7 80-100MM (2018+)
4	11.4018.010.207	FORK SPRING SOLO AIR ASSEMBLY - 80MM-29 (INCLUDES TOP CAP, AIR PISTON, SHAFT BOLT) - SID RLC A1/ SID XX/RL B1 (2017+)/REBA A7 80-100MM (2018+)
5	11.4018.026.021	FORK SPRING SOLO AIR SHAFT - 100MM-29 - SID RLC A1+, SID XX, RL B1+(2017+)/REBA A7+ 80-100MM (2018+)
5	11.4018.026.022	FORK SPRING SOLO AIR SHAFT - 100MM-27.5 - SID RLC A1+, SID XX, RL B1+(2017+)/REBA A7+ 80-100MM (2018+)
5	11.4018.026.023	FORK SPRING SOLO AIR SHAFT - 80MM-29 - SID RLC A1+, SID XX, RL B1+(2017+)/REBA A7+ 80-100MM (2018+)
6	11.4018.012.011	FORK SPRING AIR TOP CAP - 32MM SPLINE (INCLUDES TOP CAP, VALVE COVER, USES CASSETTE TOOL) - SID B1-B4 (2017-2020)/SID SL C1 (2021)/REBA A7 (2018+), REBA 26 (2020+)
7	11.4018.032.002	FORK SPRING AIR TOP CAP - 32MM SOLO AIR/DEBONAIR (INCLUDES 5 TOKENS, INTERNALLY THREADED AIR CAP) REBA/SID/REVELATION/RS-1/BLUTO/ARGYLE RCT
7	11.4018.032.003	FORK SPRING BOTTOMLESS TOKENS - SOLO AIR/DEBONAIR (QTY 5) - SID/REBA/REVELATION/RS-1/BLUTO/ARGYLE RCT SOLO AIR/35G
ns	11.4308.327.002	AIR VALVE KIT - SCHRADER CORE (QTY 2) - FORKS/SHOCKS/REVERB
	DAMPER	
8	00.4318.002.009	REMOTE - ONELOC LEFT/ABOVE, RIGHT/BELOW 10MM, REMOTE ONLY (INCLUDES REMOTE, CABLE&HOUSING)-SID,REBA,REVELATION,BLUTO,SEKTOR,RECONGOLD(2013-2017)/JUDY
8	00.4318.002.010	REMOTE - ONELOC RIGHT/ABOVE, LEFT/BELOW 10MM, REMOTE ONLY (INCLUDES REMOTE, CABLE&HOUSING)-SID,REBA,REVELATION,BLUTO,SEKTOR,RECONGOLD(2013-2017)/JUDY
9	11.4018.025.011	FORK REBOUND DAMPER - (INCLUDES SHAFT BOLT & SEALHEAD) - RAPID RECOVERY REBA 27/29 A5, BLUTO26 A1-A3/REBA A7 80-100MM/120MM (2018+)
9	11.4018.025.020	FORK REBOUND DAMPER - (INCLUDES SHAFT BOLT & SEALHEAD) - SID B1
10a	11.4015.544.330	FORK COMPRESSION DAMPER - CROWN, MOCO RL (INCLUDES COMPRESSION KNOB & SCREW) - BLUTO A1/ REBA A7 80-100MM / 120MM(2018+)
10b	11.4015.544.420	FORK COMPRESSION DAMPER - REMOTE 10MM (2013+ PUSHLOC, ONELOC, TWISTLOC) MOCO (INCLUDES SPOOL, CABLE CLAMP & SCREW) - REBA 80-100MM/120MM A7 (2018+)
11	11.4015.353.080	FORK DAMPER SEALHEAD ASSEMBLY - MOCO 32MM 12.5 ALUMINUM SHAFT- SIDB (2014-PRESENT), REVELATION (2014-PRESENT), BLUTO RLT (2015-PRESENT), SID XX/RL B1 (2017+)
18	11.4018.082.014	FORK REBOUND DAMPER KNOB KIT - (INCLUDES ADJUSTER KNOB & BOLT) 29 REBA A7 (2018+)/SID B2-B4 (2017-2020)/SID SELECT C1/SID SL SELECT C1/SID RLC3 (2021)
18	11.4018.082.015	FORK REBOUND DAMPER KNOB KIT - (INCLUDES ADJUSTER KNOB & BOLT) - 27.5 - SID B2+ (2017+)/REBA A7 (2018+)
	SPARES	
12	11.4015.259.000	FORK CRUSH WASHERS - 8MM (QTY 50)
15	11.4018.028.015	FORK FOAM RING KIT - 32MM X 4MM (QTY 20) - SID RLC A1/SID XX/RL B1 (2017+)/RECON BOOST RL C1/TK B1 (2020+)
16	11.4015.534.011	FORK HOSE CLAMP - SID RLC A1/SID XX/RL B1-B4 (2017-2020) REBA A7 80-100MM (2018+)
17a	11.4018.072.000	FORK LOWER LEG BUMP STOP - 29 - SID RLC A1/SID XX/RL B1 (2017+)/ SID B4 (2020)/SID SL C1 (2021)
17b	11.4018.072.001	FORK LOWER LEG BUMP STOP - 27 - SID RLC A1/SID XX/RL B1 (2017+)/ SID B4 (2020+)
ns	11.4018.097.000	FORK COMPRESSION DAMPER - REMOTE REVERSE PULL (PULL CABLE TO OPEN) MOCO REMOTE (INCLUDES SPOOL & CABLE CLAMP) TREK SID B1/REBA A8
	TOOLS/GREASE/FLUIDS	
ns	00.4318.031.000	FORK LOWER LEG DUST SEAL INSTALLATION TOOL 32MM (FOR FLANGELESS AND FLANGED DUST SEALS)
ns	00.4318.012.003	FORK TOP CAP/CASSETTE TOOL (FOR SRAM/SHIMANO CASSETTES) - PIKE, LYRIK, SID, REVELATION, REBA AND PARAGON FORKS
ns	00.4318.018.000	ROCKSHOX SUSPENSION CLEANER 16.9 OZ. (FOR USE WITH ALL SUSPENSION PRODUCTS)
ns	00.4315.023.010	HIGH-PRESSURE FORK/SHOCK PUMP (300 PSI MAX) ROCKSHOX
ns	00.4315.022.010	REAR SHOCK SCHRADER VALVE REMOVAL TOOL ROCKSHOX
ns	11.4315.021.020	ROCKSHOX SUSPENSION OIL, 5WT, 120ML BOTTLE - FORK DAMPER
ns	11.4015.354.010	ROCKSHOX SUSPENSION OIL, 5WT, 1 LITER BOTTLE - FORK DAMPER
ns	11.4315.021.040	ROCKSHOX SUSPENSION OIL, 15WT, 120ML BOTTLE - LOWER LEGS
ns	11.4015.354.030	ROCKSHOX SUSPENSION OIL, 15WT, 1 LITER BOTTLE - LOWER LEGS
ns	00.4318.008.000	GREASE SRAM BUTTER 20ML SYRINGE, FRICTION REDUCING GREASE BYSLICKOLEUM - DOUBLE TIME HUB PAWLS, FORKS & REVERB SERVICE
ns	00.4318.008.001	GREASE SRAM BUTTER 1OZ CONTAINER, FRICTION REDUCING GREASE BY SLICKOLEUM - DOUBLE TIME HUB PAWLS, FORKS & REVERB SERVICE

REBA 120mm A7-A8 (2018-2019)

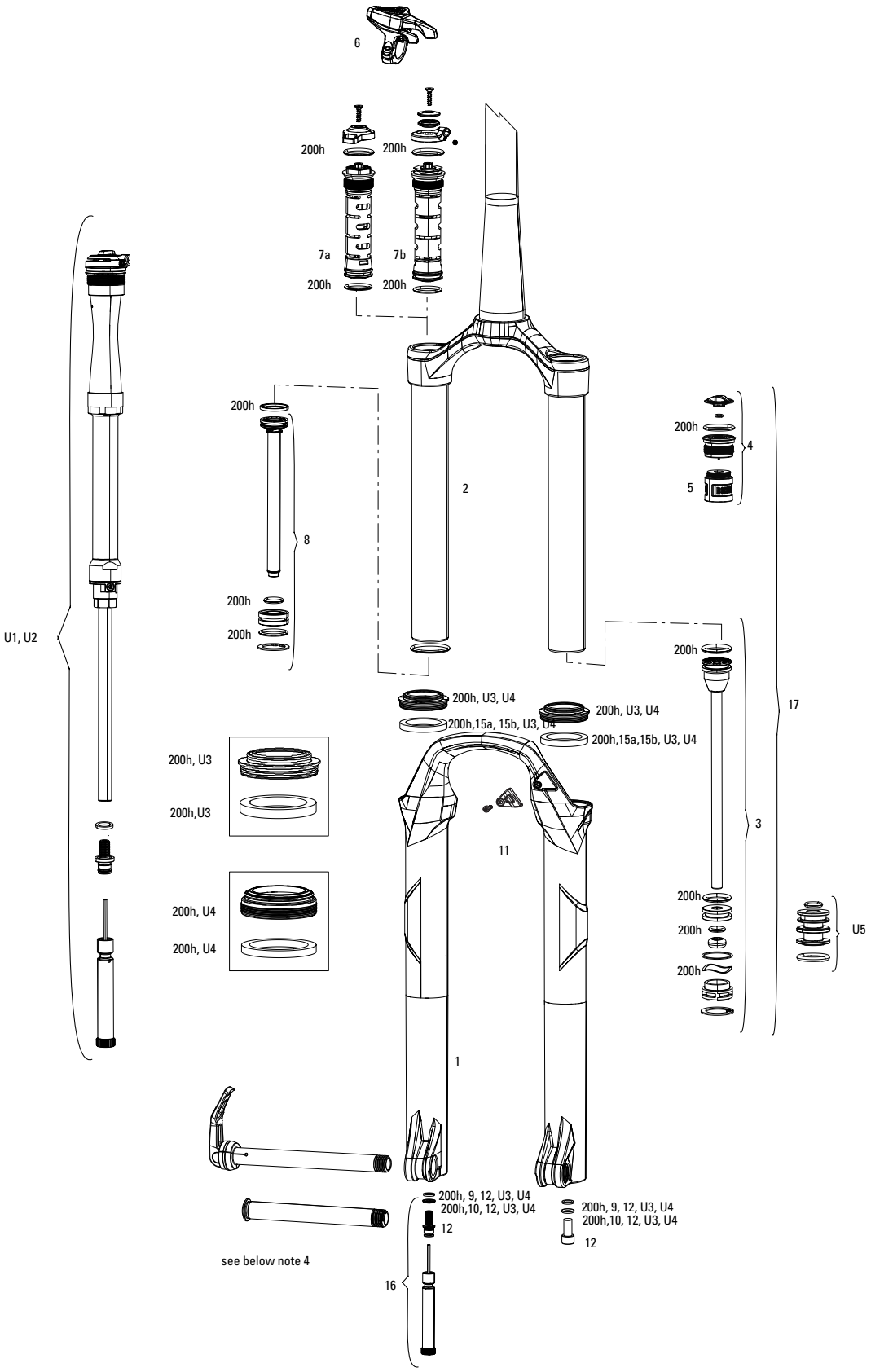

Note:

1. Convert from Crown Adjust to Remote Adjust: Remote compression damper requires remote compression adjuster spool, cable clamp and remote lever assembly.
2. Solo Air internals require Solo Air CSU; Solo Air internals are not compatible with Dual Air CSU. Dual Air internals require Dual Air CSU; Dual Air internals are not compatible with Solo Air CSU.
3. REBA chassis and internals may be travel-specific. See part kit descriptions for identification.
4. Decal and Maxle pages can be found in back of the catalog.
5. SID B1 / Reba A7 120mm max travel has 80mm to 120mm gradients

REBA 120mm A7-A8 (2018-2019)

	UPGRADE	
U1	00.4018.783.011	DAMPER UPGRADE KIT - CHARGER RLC,120 MAX TRAVEL, REMOTE (INCLUDES RIGHT SIDE INTERNALS & ONELOC REMOTE) - SID27/29(A2-A4/2012-2016),SID120(B1-B4/2020,REBA27/29(A1+/2012+)/BLUTOA1+
U2	00.4018.783.003	DAMPER UPGRADE KIT - CHARGER2 RLC CROWN 120MM MAX TRAVEL (INCLUDES COMPLETE RIGHT SIDE INTERNALS) - SID27/29(A2-A4/2012-2016),SID120(B1-B4/2020,REBA27/29(A1+/2012+)/BLUTOA1+
U3	00.4318.045.002	FORK DUST WIPER UPGRADE KIT - 32MM BLACK FLANGED LOW FRICTION SEALS (INCLUDES DUST WIPERS, 5MM & 10MM FOAM RINGS) - SID/REVELATION/REBA/ARGLE/SEKTOR/TORA/RECON/XC32
U4	00.4318.045.003	FORK DUST WIPER UPGRADE KIT - 32MM BLACK FLANGELESS ULTRA-LOW FRICTION SKF SEALS (INCLUDES DUST WIPERS & 4MM FOAM RINGS) - BLUTO/RS-1/SID B1 (2017+)/32MM BOOST™ FORKS
U5	11.4018.096.002	FORK SPRING SEALHEAD - 32mm DEBONAIR BLACK (REPLACES FLOATING SEALHEAD, BASEPLATE & WAVE WASHER) SID A1-A4(2011-2016)/REBA A2+(2013+)/BLUTO A1+(2015+)
	SERVICE	
200h	00.4315.032.632	200 HOUR/1 YEAR SERVICE KIT (INCLUDES DUST SEALS, FOAM RINGS, O-RING SEALS) - REBA A7 80-100MM (BOOST™& STANDARD) 120MM (BOOST) (2018+)
200h	00.4315.032.633	200 HOUR/1 YEAR SERVICE KIT (INCLUDES DUST SEALS, FOAM RINGS, O-RING SEALS) - REBA A7 120MM (STANDARD) (2018+)
	LOWER LEGS	
1	11.4018.006.177	FORK LOWER LEG - (DECALS NOT INCLUDED) 29 15X100 DIFFUSION BLACK - SID A1-A3 (2011-2017), REBA A1-A5(2012-2017), REBA A7+ 120MM (2018+)
1	11.4018.006.175	FORK LOWER LEG - (DECALS NOT INCLUDED) 29 15X100BLACK- SID A1-A4 (2011-2016), REBA A1-A3 (2012-2017), REBA A7+ 120MM (2018+)
	LOWER LEGS - BOOST	
1	11.4018.006.231	FORK LOWER LEG - (DECALS NOT INCLUDED) 29 15X110 BOOST™ BLACK - SID A1-A4 (2011-2016),REBA (A1-A5/2012-2017), REBA A7 120MM (2018+) SID SELECT/SELECT+ 110-120MM B4 (2020+)
1	11.4018.006.233	FORK LOWER LEG - (DECALS NOT INCLUDED) 29 15X110 BOOST™ DIFFUSION BLACK - SID A1-A4 (2011-2016),REBA (A1-A5/2012-2017), REBA A7 (2018+) SID SELECT/SELECT+ 110-120mm B4 (2020+)
1	11.4018.006.312	FORK LOWER LEG - (DECALS NOT INCLUDED) 27 15X110 BOOST™ BLACK - REBA 120MM A7 (2018+)
1	11.4018.006.314	FORK LOWER LEG - (DECALS NOT INCLUDED) 27 15X110 BOOST™ DIFFUSION BLACK 120MM - REBA 120MM A7 (2018+)
	CSU	
2	11.4018.008.528	FORK CSU - SOLO AIR 27 120MM MAX ALUMINUM TAPER BLACK (NO GRADIENTS) - REBA A7 120MM (2018+)
2	11.4018.008.534	FORK CSU - SOLO AIR 29 120MM MAX ALUMINUM TAPER BLACK (NO GRADIENTS) - REBA A7 120MM (2018+)
2	11.4018.008.530	FORK CSU - SOLO AIR 27 120MM MAX ALUMINUM TAPER DIFFUSION BLACK (NO GRADIENTS) - REBA A7 120MM (2018+)
2	11.4018.008.536	FORK CSU - SOLO AIR 29 120MM MAX ALUMINUM TAPER DIFFUSION BLACK (NO GRADIENTS) - REBA A7 120MM (2018+)
	CSU - BOOST	
2	11.4018.008.540	FORK CSU - SOLO AIR 27 BOOST™ 15X110 120MM MAX ALUMINUM TAPER BLACK (NO GRADIENTS) - REBA A7 120MM (2018+)
2	11.4018.008.546	FORK CSU - SOLO AIR 29 BOOST™ 15X110 120MM MAX ALUMINUM TAPER BLACK (NO GRADIENTS) - REBA A7 120MM (2018+)
2	11.4018.008.542	FORK CSU - SOLO AIR 27 BOOST™ 15X110 120MM MAX ALUMINUM TAPER DIFFUSION BLACK (NO GRADIENTS) - REBA A7 120MM (2018+)
2	11.4018.008.548	FORK CSU - SOLO AIR 29 BOOST™ 15X110 120MM MAX ALUMINUM TAPER DIFFUSION BLACK (NO GRADIENTS) - REBA A7 120MM (2018+)
	SPRING	
3	11.4018.026.029	FORK SPRING SOLO AIR SHAFT - 120MM-29/27 (32MM) - REBA A7+ 130-150MM(2018+)
4	11.4018.012.011	FORK SPRING AIR TOP CAP - 32MM SPLINE (INCLUDES TOP CAP, VALVE COVER, USES CASSETTE TOOL) - SID B1-B4 (2017-2020)/SID SL C1 (2021)/REBA A7 (2018+), REBA 26 (2020+)
5	11.4018.032.002	FORK SPRING AIR TOP CAP - 32MM SOLO AIR/DEBONAIR (INCLUDES 5 TOKENS, INTERNALLY THREADED AIR CAP) REBA/SID/REVELATION/RS-1/BLUTO/ARGYLE RCT
5	11.4018.032.003	FORK SPRING BOTTOMLESS TOKENS - SOLO AIR/DEBONAIR (QTY 5) - SID/REBA/REVELATION/RS-1/BLUTO/ARGYLE RCT SOLO AIR/35G
ns	11.4308.327.002	AIR VALVE KIT - SCHRADER CORE (QTY 2) - FORKS/SHOCKS/REVERB
17	11.4018.010.230	FORK SPRING SOLO AIR ASSEMBLY - 120MM-27.5/29 (INCLUDES TOP CAP, AIR PISTON, SHAFT BOLT) - REBA A7 120MM (2018+)
ns	11.4018.096.002	FORK SPRING SEALHEAD - 32MM DEBONAIR BLACK (REPLACES FLOATING SEALHEAD, BASEPLATE & WAVE WASHER) SID A1-A4(2011-2016)/REBA A2+(2013+)/BLUTO A1+(2015+)
	DAMPER	
6	00.4318.002.009	REMOTE - ONELOC LEFT/ABOVE, RIGHT/BELOW 10MM, REMOTE ONLY (INCLUDES REMOTE, CABLE&HOUSING)-SID,REBA,REVELATION,BLUTO,SEKTOR,RECONGOLD(2013-2017)/JUDY
6	00.4318.002.010	REMOTE - ONELOC RIGHT/ABOVE, LEFT/BELOW 10MM, REMOTE ONLY (INCLUDES REMOTE, CABLE&HOUSING)-SID,REBA,REVELATION,BLUTO,SEKTOR,RECONGOLD(2013-2017)/JUDY
7a	11.4015.544.330	FORK COMPRESSION DAMPER - CROWN, MOCO RL (INCLUDES COMPRESSION KNOB & SCREW) - BLUTO A1/ REBA A7 80-100MM / 120MM(2018+)
7b	11.4015.544.420	FORK COMPRESSION DAMPER - REMOTE 10MM (2013+ PUSHLOC, ONELOC, TWISTLOC) MOCO (INCLUDES SPOOL, CABLE CLAMP & SCREW) - REBA 80-100MM/120MM A7 (2018+)
8	11.4018.025.011	FORK REBOUND DAMPER - (INCLUDES SHAFT BOLT & SEALHEAD) - RAPID RECOVERY REBA 27/29 A5, BLUTO26 A1-A3/REBA A7 80-100MM/120MM (2018+)
	SPARES	
9	11.4015.259.000	FORK CRUSH WASHERS - 8MM (QTY 50)
10	11.4015.260.000	FORK CRUSH WASHER RETAINER - 8MM (QTY 50)
11	11.4015.534.010	FORK HOSE CLAMP - PIKE/LYRIK/YARI/SID/REVELATION/BOXXER/XC30/30G/30S/RECON/SEKTOR/BLUTO/REBA/35G/35S
12	11.4310.465.000	FORK SHAFT FASTENER KIT - (INCLUDES SHAFT BOLTS & CRUSH WASHERS)
15a	11.4015.496.010	FORK FOAM RING KIT - 32MM X 5MM (QTY 20) - SID A1-A3 /REBA A2-A3/BLUTO A1/SID SL C1 (2021)
15b	11.4018.028.015	FORK FOAM RING KIT - 32MM X 4MM (QTY 20) - SID RLC A1/SID XX/RL B1 (2017+)/RECON BOOST RL C1/TK B1 (2020+)
16	11.4018.082.014	FORK REBOUND DAMPER KNOB KIT - (INCLUDES ADJUSTER KNOB & BOLT) 29 REBA A7 (2018+)/SID B2-B4 (2017-2020)/SID SELECT C1/SID SL SELECT C1/SID RLC3 (2021)
16	11.4018.082.015	FORK REBOUND DAMPER KNOB KIT - (INCLUDES ADJUSTER KNOB & BOLT) - 27.5 - SID B2+ (2017+)/REBA A7 (2018+)
	TOOLS/GREASE/FLUIDS	
ns	00.4318.031.000	FORK LOWER LEG DUST SEAL INSTALLATION TOOL 32MM (FOR FLANGELESS AND FLANGED DUST SEALS)
ns	00.4318.012.003	FORK TOP CAP/CASSETTE TOOL (FOR SRAM/SHIMANO CASSETTES) - PIKE, LYRIK, SID, REVELATION, REBA AND PARAGON FORKS
ns	00.4318.018.000	ROCKSHOX SUSPENSION CLEANER 16.9 OZ. (FOR USE WITH ALL SUSPENSION PRODUCTS)
ns	00.4315.023.010	HIGH-PRESSURE FORK/SHOCK PUMP (300 PSI MAX) ROCKSHOX
ns	00.4315.022.010	REAR SHOCK SCHRADER VALVE REMOVAL TOOL ROCKSHOX
ns	11.4315.021.020	ROCKSHOX SUSPENSION OIL, 5WT, 120ML BOTTLE - FORK DAMPER
ns	11.4015.354.010	ROCKSHOX SUSPENSION OIL, 5WT, 1 LITER BOTTLE - FORK DAMPER
ns	11.4315.021.040	ROCKSHOX SUSPENSION OIL, 15WT, 120ML BOTTLE - LOWER LEGS
ns	11.4015.354.030	ROCKSHOX SUSPENSION OIL, 15WT, 1 LITER BOTTLE - LOWER LEGS
ns	00.4318.008.000	GREASE SRAM BUTTER 20ML SYRINGE, FRICTION REDUCING GREASE BYSLICKOLEUM - DOUBLE TIME HUB PAWLS, FORKS & REVERB SERVICE
ns	00.4318.008.001	GREASE SRAM BUTTER 1OZ CONTAINER, FRICTION REDUCING GREASE BY SLICKOLEUM - DOUBLE TIME HUB PAWLS, FORKS & REVERB SERVICE

REBA 130-150mm A7-A8 (2018-2019)

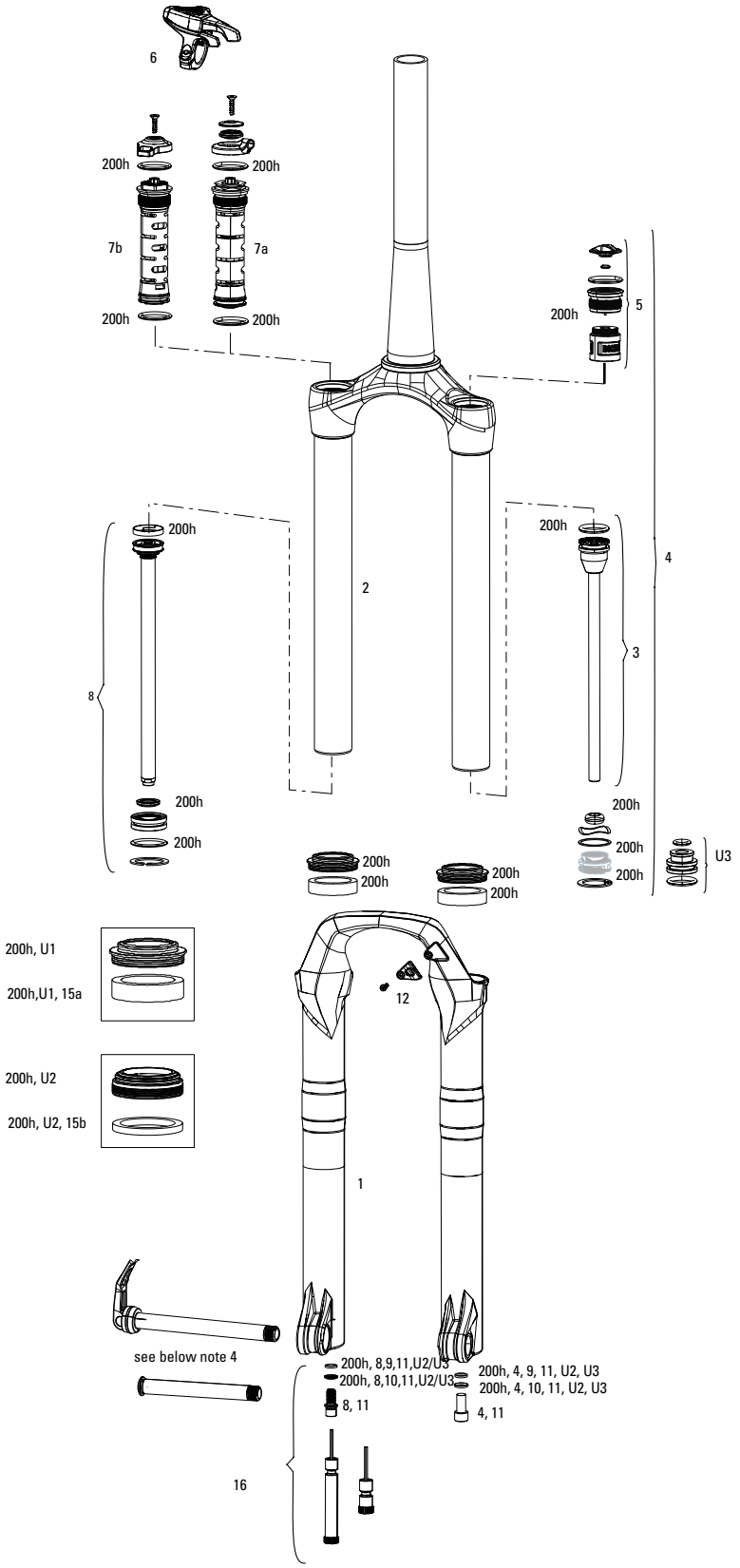

1. Convert from Crown Adjust to Remote Adjust: Remote compression damper requires remote compression adjuster spool, cable clamp and remote lever assembly.
2. Solo Air internals require Solo Air CSU; Solo Air internals are not compatible with Dual Air CSU. Dual Air internals require Dual Air CSU; Dual Air internals are not compatible with Solo Air CSU.
3. REBA chassis and internals may be travel-specific. See part kit descriptions for identification.
4. Decal and Maxle pages can be found in back of the catalog.
5. Reba A7 150mm max travel has 130mm to 150mm gradients

REBA 130-150mm A7-A8 (2018-2019)

	UPGRADES	
U1	00.4318.045.002	FORK DUST WIPER UPGRADE KIT - 32MM BLACK FLANGED LOW FRICTION SEALS (INCLUDES DUST WIPERS, 5MM & 10MM FOAM RINGS) - SID/REVELATION/REBA/ARGLE/SEKTOR/TORA/RECON/XC32
U2	00.4318.045.003	FORK DUST WIPER UPGRADE KIT - 32MM BLACK FLANGELESS ULTRA-LOW FRICTION SKF SEALS (INCLUDES DUST WIPERS & 4MM FOAM RINGS) - BLUTO/RS-1/SID B1 (2017+)/32MM BOOST™ FORKS
U3	11.4018.096.002	FORK SPRING SEALHEAD - 32MM DEBONAIR BLACK (REPLACES FLOATING SEALHEAD, BASEPLATE & WAVE WASHER) SID A1-A4(2011-2016)/REBA A2+(2013+)/BLUTO A1+(2015+)
	SERVICE	
200h	00.4315.032.635	200 HOUR/1 YEAR SERVICE KIT (INCLUDES DUST SEALS, FOAM RINGS, O-RING SEALS) - REBA A7 130-150MM (BOOST) (2018+)
200h	00.4315.032.634	200 HOUR/1 YEAR SERVICE KIT (INCLUDES DUST SEALS, FOAM RINGS, O-RING SEALS) - REBA A7 130-150MM (STANDARD) (2018+), REBA 26 80-140MM (2020+)
	LOWER LEG	
1	11.4018.006.187	FORK LOWER LEG - (DECALS NOT INCLUDED) 29 15X100 BLACK - REVELATION A1-A3 (2010-2016) REBA A7 130-150MM (2018+)
1	11.4018.006.189	FORK LOWER LEG - (DECALS NOT INCLUDED) 29 15X100 DIFFUSION BLACK - REVELATION A1-A3 (2010-2016) REBA A7130-150MM (2018+)
1	11.4018.006.184	FORK LOWER LEG - (DECALS NOT INCLUDED) 27 15X100 BLACK - REVELATION A1-A3 (2010-2017) REBA A7 130-150MM (2018+)
1	11.4018.006.259	FORK LOWER LEG - (DECALS NOT INCLUDED) 27 15X100 BLACK - SID RLC A1/SID XX/RL B1 (2017+) REBA 80-100MM A7 (2018+)
	LOWER LEG - BOOST	
1	11.4018.006.254	FORK LOWER LEG - (DECALS NOT INCLUDED) 29 15X110 BOOST™ BLACK - REVELATION A5(2017), REBA 130-150MM A7 (2018+)
1	11.4018.006.255	FORK LOWER LEG - (DECALS NOT INCLUDED) 29 15X110 BOOST™ DIFFUSION BLACK - REVELATION A5(2017), REBA 130-150MM A7 (2018+)
1	11.4018.006.186	FORK LOWER LEG - (DECALS NOT INCLUDED) 27 15X100 DIFFUSION BLACK A1-A3 - REVELATION (2010 2017) REBA A7 130-150MM (2018+)
1	11.4018.006.315	FORK LOWER LEG - (DECALS NOT INCLUDED) 27 15X110 BOOST™ BLACK - REBA A7 130-150MM (2018+)
1	11.4018.006.317	FORK LOWER LEG - (DECALS NOT INCLUDED) 27 15X110 BOOST™ DIFFUSION BLACK - REBA A7130-150MM (2018+)
	CSU	
2	11.4018.008.531	FORK CSU - SOLO AIR 27 150MM MAX ALUMINUM TAPER BLACK (NO GRADIENTS) - REBA A7 130-150MM (2018+)
2	11.4018.008.533	FORK CSU - SOLO AIR 27 150MM MAX ALUMINUM TAPER DIFFUSION BLACK (NO GRADIENTS) - REBA A7 130-150MM (2018+)
2	11.4018.008.537	FORK CSU - SOLO AIR 29 150MM MAX ALUMINUM TAPER BLACK (NO GRADIENTS) - REBA A7 130-150MM (2018+)
2	11.4018.008.539	FORK CSU - SOLO AIR 29 150MM MAX ALUMINUM TAPER DIFFUSION BLACK (NO GRADIENTS) - REBA A7 130-150MM (2018+)
	CSU - BOOST	
2	11.4018.008.543	FORK CSU - SOLO AIR 27 BOOST™ 15X110 150MM MAX ALUMINUM TAPER BLACK (NO GRADIENTS) - REBA A7 130-150MM (2018+)
2	11.4018.008.545	FORK CSU - SOLO AIR 27 BOOST™ 15X110 150MM MAX ALUMINUM TAPER DIFFUSION BLACK (NO GRADIENTS) - REBA A7 130-150MM (2018+)
2	11.4018.008.549	FORK CSU - SOLO AIR 29 BOOST™ 15X110 150MM MAX ALUMINUM TAPER BLACK (NO GRADIENTS) - REBA A7 130-150MM (2018+)
2	11.4018.008.551	FORK CSU - SOLO AIR 29 BOOST™ 15X110 150MM MAX ALUMINUM TAPER DIFFUSION BLACK (NO GRADIENTS) - REBA A7 130-150MM (2018+)
	SPRING	
3	11.4018.026.027	FORK SPRING SOLO AIR SHAFT - 130MM-29/27 (32MM) - REVELATION (A1-A4/2010-2017)/ REBA A7+ 130-150MM(2018+)
3	11.4018.026.026	FORK SPRING SOLO AIR SHAFT - 140MM-29/27 (32MM) - REVELATION (A1-A4/2010-2017)/ REBA A7+ 130-150MM(2018+)
3	11.4018.026.025	FORK SPRING SOLO AIR SHAFT - 150MM-27 (32MM) - REVELATION (A1-A4/2010-2017)/ REBA A7+ 130-150MM(2018+)
4	11.4018.010.229	FORK SPRING SOLO AIR ASSEMBLY - 150MM-27.5/29 (INCLUDES TOP CAP, AIR PISTON, SHAFT BOLT) - REBA A7 130-150MM (2018+)
4	11.4018.010.228	FORK SPRING SOLO AIR ASSEMBLY - 140MM-27.5/29 (INCLUDES TOP CAP, AIR PISTON, SHAFT BOLT) - REBA A7 130-150MM (2018+)
4	11.4018.010.227	FORK SPRING SOLO AIR ASSEMBLY - 130MM-27.5/29 (INCLUDES TOP CAP, AIR PISTON, SHAFT BOLT) - REBA A7 130-150MM(2018+)
5	11.4018.012.011	FORK SPRING AIR TOP CAP - 32MM SPLINE (INCLUDES TOP CAP, VALVE COVER, USES CASSETTE TOOL) - SID B1-B4 (2017-2020)/SID SL C1 (2021)/REBA A7 (2018+), REBA 26 (2020+)
	DAMPER	
6	00.4318.002.009	REMOTE - ONELOC LEFT/ABOVE, RIGHT/BELOW 10MM, REMOTE ONLY (INCLUDES REMOTE, CABLE&HOUSING)-SID,REBA,REVELATION,BLUTO,SEKTOR,RECONGOLD(2013-2017)/JUDY
6	00.4318.002.010	REMOTE - ONELOC RIGHT/ABOVE, LEFT/BELOW 10MM, REMOTE ONLY (INCLUDES REMOTE, CABLE&HOUSING)-SID,REBA,REVELATION,BLUTO,SEKTOR,RECONGOLD(2013-2017)/JUDY
7a	11.4015.544.430	FORK COMPRESSION DAMPER - REMOTE 10MM (2013+ PUSHLOC, ONELOC, TWISTLOC) MOCO (INCLUDES SPOOL, CABLE CLAMP & SCREW) - REBA 130-150 A7+ (2018+)
7b	11.4015.544.090	FORK COMPRESSION DAMPER - CROWN MOCO DNA (INCLUDES COMPRESSION KNOB & SCREW) - REVELATION RL A1-A3 (2012-2016) REBA (2009-2011), REBA 26 (2020+)
8	11.4018.025.021	FORK REBOUND DAMPER - (INCLUDES SHAFT BOLT & SEALHEAD) - REVELATION A5 (2017+) REBA A7 130-150MM (2018+), REBA 26 (2020+)
	SPARES	
9	11.4015.259.000	FORK CRUSH WASHERS - 8MM (QTY 50)
10	11.4015.260.000	FORK CRUSH WASHER RETAINER - 8MM (QTY 50)
11	11.4310.465.000	FORK SHAFT FASTENER KIT - (INCLUDES SHAFT BOLTS & CRUSH WASHERS)
12	11.4015.534.010	FORK HOSE CLAMP - PIKE/LYRIK/YARI/SID/REVELATION/BOXXER/XC30/30G/30S/RECON/SEKTOR/BLUTO/REBA/35G/35S
15a	11.4310.698.000	FORK FOAM RING KIT - 32MM X 10MM (QTY 20) - REVELATION/ARGYLE/SEKTOR/TORA/RECON/XC32
15b	11.4018.028.015	FORK FOAM RING KIT - 32MM X 4MM (QTY 20) - SID RLC A1/SID XX/RL B1 (2017+)/RECON BOOST RL C1/TK B1 (2020+)
16	11.4018.082.014	FORK REBOUND DAMPER KNOB KIT - (INCLUDES ADJUSTER KNOB & BOLT) 29 REBA A7 (2018+)/SID B2-B4 (2017-2020)/SID SELECT C1/SID SL SELECT C1/SID RLC3 (2021)
16	11.4018.082.015	FORK REBOUND DAMPER KNOB KIT - (INCLUDES ADJUSTER KNOB & BOLT) - 27.5 - SID B2+ (2017+)/REBA A7 (2018+)
	TOOLS/GREASE/FLUIDS	
ns	00.4318.031.000	FORK LOWER LEG DUST SEAL INSTALLATION TOOL 32MM (FOR FLANGELESS AND FLANGED DUST SEALS)
ns	00.4318.012.003	FORK TOP CAP/CASSETTE TOOL (FOR SRAM/SHIMANO CASSETTES) - PIKE, LYRIK, SID, REVELATION, REBA AND PARAGON FORKS
ns	00.4318.018.000	ROCKSHOX SUSPENSION CLEANER 16.9 OZ. (FOR USE WITH ALL SUSPENSION PRODUCTS)
ns	00.4315.023.010	HIGH-PRESSURE FORK/SHOCK PUMP (300 PSI MAX) ROCKSHOX
ns	00.4315.022.010	REAR SHOCK SCHRADER VALVE REMOVAL TOOL ROCKSHOX
ns	11.4315.021.020	ROCKSHOX SUSPENSION OIL, 5WT, 120ML BOTTLE - FORK DAMPER
ns	11.4015.354.010	ROCKSHOX SUSPENSION OIL, 5WT, 1 LITER BOTTLE - FORK DAMPER
ns	11.4315.021.040	ROCKSHOX SUSPENSION OIL, 15WT, 120ML BOTTLE - LOWER LEGS
ns	11.4015.354.030	ROCKSHOX SUSPENSION OIL, 15WT, 1 LITER BOTTLE - LOWER LEGS
ns	00.4318.008.000	GREASE SRAM BUTTER 20ML SYRINGE, FRICTION REDUCING GREASE BYSLICKOLEUM - DOUBLE TIME HUB PAWLS, FORKS & REVERB SERVICE
ns	00.4318.008.001	GREASE SRAM BUTTER 1OZ CONTAINER, FRICTION REDUCING GREASE BY SLICKOLEUM - DOUBLE TIME HUB PAWLS, FORKS & REVERB SERVICE

REBA A1-A6 (2012-2017)

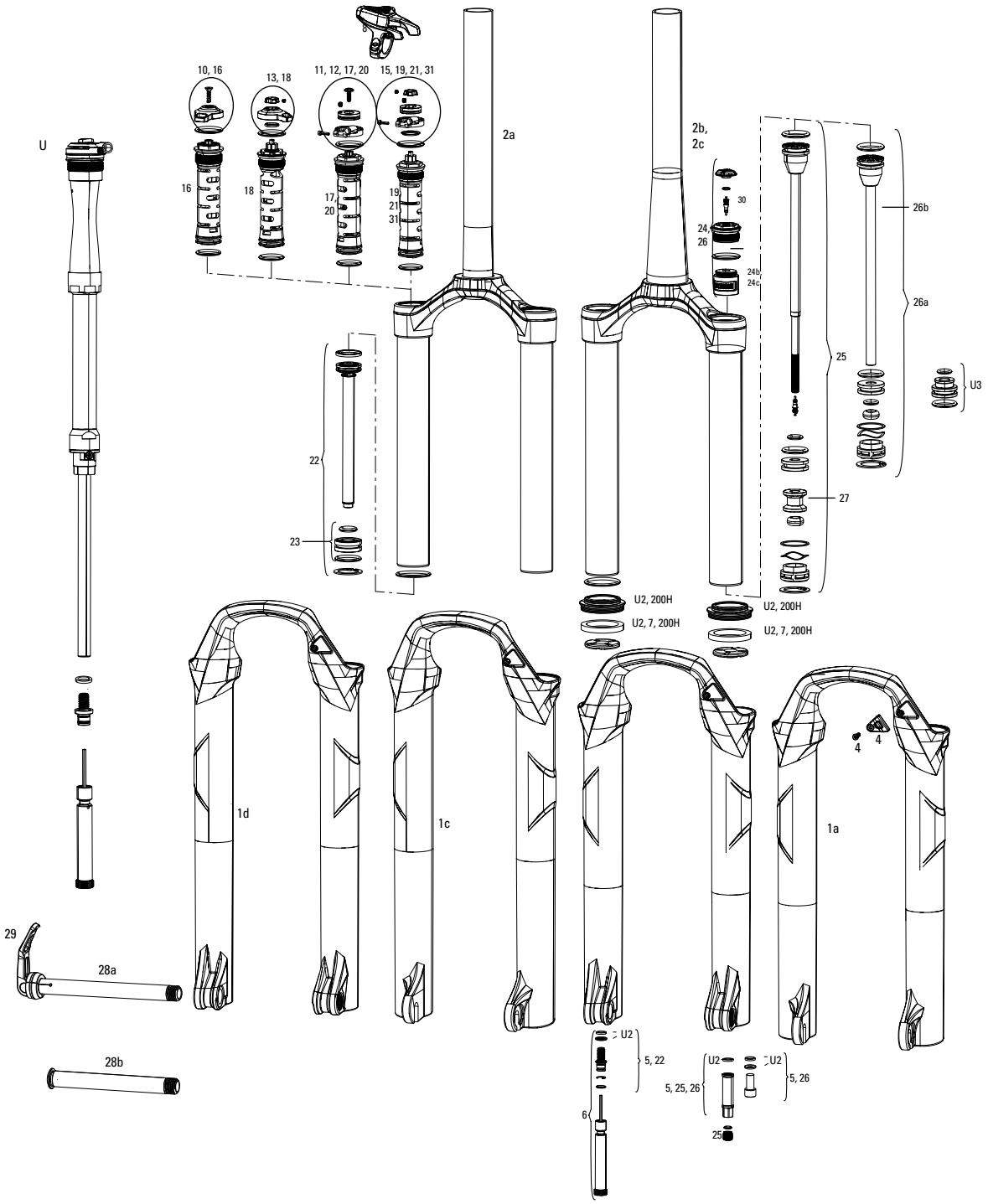

Notes:

IMPORTANT - 2012-2016 Reba CSU (28.2 inner tube diameter), lower leg, spring assembly and damper assemblies are NOT compatible with 2005-2011 Reba (27.8 inner tube diameter) forks. Dual Air CSU and Dual Air spring assemblies are NOT compatible with Solo Air CSU and Solo Air spring assemblies.

1. Full service kits include replaceable o-rings, glide rings, retaining rings, crush washers, crush washer retainers and shaft bolts/nuts. All air service kits include replacement schrader valve cores. Not all parts service parts are pictured. All basic service kits include the following replaceable wear items: o-rings, glide rings, dust seals, and foam rings.
2. Convert from Crown Adjust to Remote Adjust: Remote compression damper requires remote compression adjuster spool, cable clamp and remote lever assembly.
3. Solo Air internals require Solo Air CSU; Solo Air internals are not compatible with Dual Air CSU. Dual Air internals require Dual Air CSU; Dual Air internals are not compatible with Solo Air CSU.

REBA A1-A6 (2012-2017)

	UPGRADE	
U	00.4018.783.011	DAMPER UPGRADE KIT - CHARGER RLC,120 MAX TRAVEL, REMOTE (INCLUDES RIGHT SIDE INTERNALS & ONELOC REMOTE) - SID27/29(A2-A4/2012-2016),SID120(B1-B4/2020,REBA27/29(A1+/2012+) /BLUTOA1+
U	00.4018.783.003	DAMPER UPGRADE KIT - CHARGER2 RLC CROWN 120MM MAX TRAVEL (INCLUDES COMPLETE RIGHT SIDE INTERNALS) - SID27/29(A2-A4/2012-2016),SID120(B1-B4/2020,REBA27/29(A1+/2012+)/ BLUTOA1+
U2	00.4318.045.002	FORK DUST WIPER UPGRADE KIT - 32MM BLACK FLANGED LOW FRICTION SEALS (INCLUDES DUST WIPERS, 5MM & 10MM FOAM RINGS) - SID/REVELATION/REBA/ARGLE/SEKTOR/TORA/ RECON/XC32
U3	11.4018.096.002	FORK SPRING SEALHEAD - 32mm DEBONAIR BLACK (REPLACES FLOATING SEALHEAD, BASEPLATE & WAVE WASHER) SID A1-A4(2011-2016)/REBA A2+(2013+)/BLUTO A1+(2015+)
see SID B	00.4318.004.001	REMOTE UPGRADE KIT - XLOC FULL SPRINT - INCLUDES MOTION CONTROL X DNA COMP DAMPER, REAR SHOCK HYDRAULIC HOSE, BLEED SYRINGES, LEFT, MMX, BLACK - SIDB (2011-2016)
see SID B	00.4318.004.002	REMOTE UPGRADE KIT - XLOC FULL SPRINT - INCLUDES MOTION CONTROL X DNA COMP DAMPER, REAR SHOCK HYDRAULIC HOSE, BLEED SYRINGES, RIGHT, MMX, BLACK - SIDB (2011-2016)
	SERVICE	
ns	00.4315.032.080	AM FORK SERVICE KIT, BASIC (INCLUDES DUST SEALS, FOAM RINGS,O-RING SEALS) - REBA (2012-2014) AND SID (2012-2014)
ns	00.4315.032.420	AM FORK SERVICE KIT, BASIC (INCLUDES DUST SEALS, FOAM RINGS,O-RING SEALS) - REBA A3 (2014-2016)
ns	11.4015.494.000	FORK SERVICE KIT - DUAL AIR (120MM) - SID
ns	11.4018.018.001	FORK SERVICE KIT - FULL SERVICE SOLO AIR (INCLUDES AIR SEALS, DAMPER SEALS & HARDWARE & BLACK SEALS) - SID/REBA A2-A3(2013-2016)
ns	00.4315.032.611	AM FORK SERVICE KIT BASIC (INCLUDES DUST SEALS, FOAM RINGS, O-RING SEALS) - REBA 15X100 BOOST A5-A6 (2016-2017)
	LOWER LEG	
1a	11.4018.006.160	FORK LOWER LEG - (DECALS NOT INCLUDED) 26 9X100 QR BLACK - SID A1-A4 (2011-2016), REBA A1-A5(2012-2017)
1c	11.4018.006.168	FORK LOWER LEG - (DECALS NOT INCLUDED) 27 9X100 QR DIFFUSION BLACK - SID A1-A4 (2011-2016), REBA A1-A5(2012-2017)
1c	11.4018.006.172	FORK LOWER LEG - (DECALS NOT INCLUDED) 29 9X100 QR BLACK - SID A1-A4 (2011-2016), REBA A1-A3 (2012-2017)
1c	11.4018.006.174	FORK LOWER LEG - (DECALS NOT INCLUDED) 29 9X100 QR DIFFUSION BLACK - SID A1-A4 (2011-2016), REBA A1-A5(2012-2017)
1d	11.4018.006.169	FORK LOWER LEG - (DECALS NOT INCLUDED) 27 15X100 BLACK - SID A1-A4 (2011-2016), REBA A1-A5(2012-2017), REBA A7+ 120MM (2018+)
1d	11.4018.006.171	FORK LOWER LEG - (DECALS NOT INCLUDED) 27 15X100 DIFFUSION BLACK - SID A1-A4 (2011-2016), REBA A1-A5(2012-2017), REBA A7+ 120MM (2018+)
1d	11.4018.006.175	FORK LOWER LEG - (DECALS NOT INCLUDED) 29 15X100BLACK- SID A1-A4 (2011-2016), REBA A1-A3 (2012-2017), REBA A7+ 120MM (2018+)
1d	11.4018.006.177	FORK LOWER LEG - (DECALS NOT INCLUDED) 29 15X100 DIFFUSION BLACK - SID A1-A3 (2011-2017), REBA A1-A5(2012-2017), REBA A7+ 120MM (2018+)
1d	11.4018.006.231	FORK LOWER LEG - (DECALS NOT INCLUDED) 29 15X110 BOOST™ BLACK - SID A1-A4 (2011-2016),REBA (A1-A5/2012-2017), REBA A7 120MM (2018+) SID SELECT/SELECT+ 110-120MM B4 (2020+)
ns	11.4018.006.162	FORK LOWER LEG - (DECALS NOT INCLUDED) 26 9X100 QR DIFFUSION BLACK - SID A1-A4 (2011-2016), REBA A1-A5(2012-2017)
ns	11.4018.006.166	FORK LOWER LEG - (DECALS NOT INCLUDED) 27 9X100 QR BLACK - SID A1-A4 (2011-2016), REBA A1-A5(2012-2017)
	CSU	
ns	11.4018.008.244	FORK CSU - SOLO AIR 26 ALUMINUM 11/8 BLACK (WITH BLACK UPPER TUBES) - SID/REBA A2-A3 (2013-2016)
ns	11.4018.008.247	FORK CSU - SOLO AIR 26 ALUMINUM TAPER BLACK (WITH BLACK UPPER TUBES) - SID/REBA A2-A3 (2013-2016)
2b	11.4018.008.252	FORK CSU - SOLO AIR 27.5 ALUMINUM TAPER BLACK (WITH BLACK UPPER TUBES) - SID/REBA A2-A3 (2013-2016)
2b	11.4018.008.254	FORK CSU - SOLO AIR 27.5 ALUMINUM TAPER DIFFUSION BLACK (WITH BLACK UPPER TUBES) - SID/REBA A2-A3(2013-2016)
2a	11.4018.008.255	FORK CSU - SOLO AIR 29 46 OFF-SET ALUMINUM 11/8 BLACK (WITH BLACK UPPER TUBES) - SID/REBA A2-A3 (2013-2016)
2a	11.4018.008.257	FORK CSU - SOLO AIR 29 46 OFF-SET ALUMINUM 11/8 DIFFUSION BLACK (WITH BLACK UPPER TUBES)- SID/REBA A2-A3 (2013-2016)
2a	11.4018.008.260	FORK CSU - SOLO AIR 29 51 OFF-SET ALUMINUM 11/8 DIFFUSION BLACK (WITH BLACK UPPER TUBES) - SID/REBA A2-A3 (2013-2016)
2b	11.4018.008.261	FORK CSU - SOLO AIR 29 46 OFF-SET ALUMINUM TAPER BLACK (WITH BLACK UPPER TUBES) - SID/REBA A2-A3 (2013-2016)
2b	11.4018.008.263	FORK CSU - SOLO AIR 29 46 OFF-SET ALUMINUM TAPER DIFFUSION BLACK (WITH BLACK UPPER TUBES) - SID/REBA A2-A3 (2013-2016)
2c	11.4018.008.264	FORK CSU - SOLO AIR 29 46 OFF-SET CARBON TAPER BLACK (WITH BLACK UPPER TUBES) - SID/REBA A2-A3 (2013-2016)
2c	11.4018.008.265	FORK CSU - SOLO AIR 29 46 OFF-SET CARBON TAPER DIFFUSION BLACK (WITH BLACK UPPER TUBES) - SID/REBA A2-A3 (2013-2016)
2b	11.4018.008.266	FORK CSU - SOLO AIR 29 51 OFF-SET ALUMINUM TAPER BLACK (WITH BLACK UPPER TUBES) - SID/REBA A2-A3 (2013-2016)
2b	11.4018.008.268	FORK CSU - SOLO AIR 29 51 OFF-SET ALUMINUM TAPER DIFFUSION BLACK (WITH BLACK UPPER TUBES) - SID/REBA A2-A3 (2013-2016)
2c	11.4018.008.269	FORK CSU - SOLO AIR 29 51 OFF-SET CARBON TAPER BLACK (WITHBLACK UPPER TUBES) - SID/REBA A2-A3 (2013-2016)
2c	11.4018.008.407	FORK CSU - SOLO AIR 29"/27.5"+ BOOST™ COMPATIBLE 15X110 51 OFF-SET ALUMINUM TAPER BLACK - SID/REBA
2c	11.4018.008.409	FORK CSU - SOLO AIR 29"/27.5"+ BOOST™ COMPATIBLE 15X110 51 OFF-SET ALUMINUM TAPER DIFFUSION BLACK - SID/REBA
	DAMPER	
4	11.4015.534.010	FORK HOSE CLAMP - PIKE/LYRIK/YARI/SID/REVELATION/BOXXER/XC30/30G/30S/RECON/SEKTOR/BLUTO/REBA/35G/35S
5	11.4015.293.000	FORK REBOUND DAMPER KNOB KIT - (INCLUDES ADJUSTER KNOB & BOLT) - 2008-2016 SID/2012-2016 REBA
ns	11.4308.848.000	REMOTE - POPLOC LEFT 17MM CABLE PULL - RL (PRE-2013) & ALL TK DAMPERS, (NOT COMPATIBLE WITH 2013+ MOCO)
ns	11.4309.207.000	REMOTE - POPLOC RIGHT 17MM CABLE PULL - RL (PRE-2013) & ALL TK DAMPERS
ns	11.4308.849.000	REMOTE - POPLOC LEFT ADJUSTABLE 17MM CABLE PULL (NOT COMPATIBLE WITH 2013+ MOCO RL) - RL (PRE-2013) & TK DAMPERS
ns	11.4309.208.000	REMOTE - POPLOC RIGHT ADJUSTABLE 17MM CABLE PULL (NOT COMPATIBLE WITH 2013+ MOCO RL) - RL (PRE-2013) & TK DAMPERS
8	00.4318.002.009	REMOTE - ONELOC LEFT/ABOVE, RIGHT/BELOW 10MM, REMOTE ONLY (INCLUDES REMOTE, CABLE&HOUSING)-SID,REBA,REVELATION,BLUTO,SEKTOR,RECONGOLD(2013-2017)/JUDY
8	00.4318.002.010	REMOTE - ONELOC RIGHT/ABOVE, LEFT/BELOW 10MM, REMOTE ONLY (INCLUDES REMOTE, CABLE&HOUSING)-SID,REBA,REVELATION,BLUTO,SEKTOR,RECONGOLD(2013-2017)/JUDY
10	11.4015.461.010	FORK COMPRESSION DAMPER KNOB KIT - CROWN MOCO (INCLUDES SCREW) - REBA RL (2012-2016)/RECON, SEKTOR GOLD (2011-2016)
11	11.4015.461.020	FORK COMPRESSION DAMPER KNOB KIT - REMOTE 10/17MM TK/MOCO (INCLUDES SPOOL, CABLE STOP, SCREW) - REBA RL (2012 2016)/RECON, SEKTOR GOLD (2011-2016)
12	11.4018.011.002	FORK COMPRESSION DAMPER KNOB KIT - REMOTE 10MM (2013+ PUSHLOC, ONELOC, TWISTLOC) TURNKEY - RECON GOLD A1-A3 (2011-2017)/SEKTOR A1-B1 (2011-2018)/REBA A1-A5 (2012-2017)
13	11.4015.294.000	FORK COMPRESSION DAMPER KNOB KIT - CROWN MOCO (INCLUDES SET SCREW, EXTERNAL FLOODGATE ADJUSTER) - SID RLT (2009-2011)/REBA RLT (2011-2012)/REVELATION RLT (2011-2012)
15	11.4018.011.004	FORK COMPRESSION DAMPER KNOB KIT - REMOTE 10MM (2013+ PUSHLOC, ONELOC, TWISTLOC) RLT - REBA A1-A5 (2012-2017)
16	11.4015.544.010	FORK COMPRESSION DAMPER - CROWN MOCO DNA (INCLUDES COMPRESSION KNOB, GATE KNOB & BOLT) - SID/REBA RL(120MM ONLY) A1-A3 2012-2016
17	11.4015.544.020	FORK COMPRESSION DAMPER - REMOTE 17MM (POPLOC, PRE-2013 PUSHLOC) MOCO DNA (INCLUDES SPOOL & CABLE STOP CLAMP) - SIDB/REBA RL (120MM ONLY) A1-A3 (2012-2016)
18	11.4015.544.050	FORK COMPRESSION DAMPER - CROWN ADJUST MOCO DNA (INCLUDES COMPRESSION KNOB, GATE KNOB & BOLT) - SIDB/REBA RLT (120MM ONLY) A1A3 (2012-2016)
19	11.4015.544.060	FORK COMPRESSION DAMPER - REMOTE 17MM (POPLOC, PRE-2013 PUSHLOC) MOCO DNA THRESHOLD (INCLUDES SPOOL, CABLE CLAMP & FLOODGATE KNOB) - SIDB/REBA RLT (120MM ONLY) A1-A3 (2012-2016)

REBA A1-A6 (2012-2017)

	DAMPER CONT.	
20	11.4015.544.210	FORK COMPRESSION DAMPER - REMOTE 10MM (2013+ PUSHLOC, ONELOC, TWISTLOC) MOCO RL DNA, SILVER (INCLUDES SPOOL & CABLE CLAMP) - SIDB/REBA A2-A3 (2013-2016)
20	11.4015.544.230	FORK COMPRESSION DAMPER - REMOTE 10MM (2013+ PUSHLOC, ONELOC, TWISTLOC) MOCO RL DNA, BLACK (INCLUDES SPOOL & CABLE CLAMP) - SIDB/REBA A2-A3 (2013-2016)
21	11.4015.544.240	FORK COMPRESSION DAMPER - REMOTE 10MM (2013+ PUSHLOC, ONELOC, TWISTLOC) MOCO RTL DNA , BLACK (INCLUDES SPOOL & CABLE CLAMP) - SIDB/REBA A2-A3 (2013-2016)
22	11.4018.025.000	FORK REBOUND DAMPER - (INCLUDES SHAFT BOLT & SEALHEAD) - REBA 27.5/29 A1-A3 (2012-2014)
22	11.4018.025.011	FORK REBOUND DAMPER - (INCLUDES SHAFT BOLT & SEALHEAD) - RAPID RECOVERY REBA 27/29 A5, BLUTO26 A1-A3/REBA A7 80-100MM/120MM (2018+)
23	11.4015.353.010	FORK DAMPER SEALHEAD ASSEMBLY - MOCO 32MM - SIDA 2009-2014, SIDB 2011-2013, REBA 2009-PRESENT, REVELATION2009-2013, BLUTO RL 2015-PRESENT
	SPRING	
24	11.4018.012.006	FORK SPRING AIR TOP CAP - 32MM (ALUMINUM UPPER TUBES ONLY, BOTTOMLESS TOKEN COMPATIBLE) - REBA A1-A5/SIDA1-A4/REVELATION A1-A4/RS-1 A+/BLUTO A1+/ARGYLE A1+
24	11.4018.032.002	FORK SPRING AIR TOP CAP - 32MM SOLO AIR/DEBONAIR (INCLUDES 5 TOKENS, INTERNALLY THREADED AIR CAP) REBA/SID/REVELATION/RS-1/BLUTO/ARGYLE RCT
24c	11.4018.032.003	FORK SPRING BOTTOMLESS TOKENS - SOLO AIR/DEBONAIR (QTY 5) - SID/REBA/REVELATION/RS-1/BLUTO/ARGYLE RCT SOLO AIR/35G
25	11.4015.546.040	FORK SPRING DUAL AIR ASSEMBLY - 120MM (INCLUDES LEFT SIDE INTERNALS) (120MM CHASSIS ONLY) - 2012 REBA/SIDB 26"
25	11.4015.546.050	FORK SPRING DUAL AIR ASSEMBLY - 100MM (INCLUDES LEFT SIDE INTERNALS) (120MM CHASSIS ONLY) - 2012 REBA/SIDB 29"
26a	11.4018.010.046	FORK SPRING SOLO AIR ASSEMBLY - 120MM-27.5/29 BLACK (INCLUDES TOP CAP, AIR PISTON, SHAFT BOLT) - REBA A2-A6/SIDB A2-A4
26a	11.4018.010.119	FORK SPRING SOLO AIR ASSEMBLY - 110MM-29 (INCLUDES TOP CAP, 1 BOTTOMLESS TOKEN, AIR PISTON, SHAFT BOLT) - REBA A1-A5(2012- 2017)/SID A1-A4 (2011- 2016)
26a	11.4018.010.120	FORK SPRING SOLO AIR ASSEMBLY - 100MM-27.5/29 (INCLUDES TOP CAP, 2 BOTTOMLESS TOKENS, SOLO AIR SPRING, SHAFT BOLT) - REBA A1-A5(2012- 2017)/SID A1-A4 (2011- 2016)
226a	11.4018.010.121	FORK SPRING SOLO AIR ASSEMBLY - 95MM-29 (INCLUDES TOP CAP, 2 BOTTOMLESS TOKENS, AIR PISTON, SHAFT BOLT) - REBA A1-A5(2012- 2017)/SID A1-A4 (2011- 2016)
26a	11.4018.010.122	FORK SPRING SOLO AIR ASSEMBLY - 90MM-29 (INCLUDES TOP CAP, 3 BOTTOMLESS TOKENS, AIR PISTON, SHAFT BOLT) - REBA A1-A5(2012- 2017)/SID A1-A4 (2011- 2016)
26a	11.4018.010.056	FORK SPRING SOLO AIR ASSEMBLY - 120MM-26 (INCLUDES TOP CAP, AIR PISTON, SHAFT BOLT) - REBA A2-A6/SIDB A2-A4
26a	11.4018.010.125	FORK SPRING SOLO AIR ASSEMBLY - 100MM-26 (INCLUDES TOP CAP, 2 BOTTOMLESS TOKENS, AIR PISTON, SHAFT BOLT) - REBA A1-A5(2012- 2017)/SID A1-A4 (2011- 2016)
26b	11.4018.021.000	FORK SPRING SOLO AIR SHAFT - 120MM-27.5"/(29"A3+) NOT COMPATIBLE WITH PRE 2014/A3 29" (INCLUDES AIR SHAFT, PISTON & SEAL) - SIDB A2-A4(2013-2016)/REBA A3-A7(2013-2017)
26b	11.4018.021.001	FORK SPRING SOLO AIR SHAFT - 110MM-27.5"/29" (INCLUDES AIR SHAFT, PISTON & SEAL) - SIDB A2-A4(2013-2016)/REBA A3-A7(2013-2017)
26b	11.4018.021.002	FORK SPRING SOLO AIR SHAFT - 100MM-27.5"/29" (INCLUDES AIR SHAFT, PISTON & SEAL) - SIDB A2-A4(2013-2016)/REBA A3-A7(2013-2017)
26b	11.4018.021.003	FORK SPRING SOLO AIR SHAFT - 90MM-27.5"/29" (INCLUDES AIR SHAFT, PISTON & SEAL) - SIDB A2-A4(2013-2016)/REBA A3-A7(2013-2017)
26b	11.4018.021.004	FORK SPRING SOLO AIR SHAFT - 80MM-27.5"/29" (INCLUDES AIR SHAFT, PISTON & SEAL) - SIDB A2-A4(2013-2016)/REBA A3-A7(2013-2017)
26b	11.4018.021.005	FORK SPRING SOLO AIR SHAFT - 120MM-26"/RS-1 (INCLUDES AIR SHAFT, PISTON & SEAL) - SIDB A2-A4(26")/REBA A3-A7(26")/RS-1
26b	11.4018.021.006	FORK SPRING SOLO AIR SHAFT - 110MM-26"/RS-1 (INCLUDES AIR SHAFT, PISTON & SEAL) - SIDB A2-A4(26")/REBA A3-A7(26")/RS-1
26b	11.4018.021.007	FORK SPRING SOLO AIR SHAFT - 100MM-26"/RS-1 (INCLUDES AIR SHAFT, PISTON & SEAL) - SIDB A2-A4(26")/REBA A3-A7(26")/RS-1
26b	11.4018.021.009	FORK SPRING SOLO AIR SHAFT - 80MM-26"/RS-1 (INCLUDES AIR SHAFT, PISTON & SEAL) - SIDB A2-A4(26")/REBA A3-A7(26")/RS-1
27	11.4015.450.000	FORK SPRING TRAVEL SPACERS - ALL TRAVEL SPACER KIT (NOT COMPATIBLE WITH SID/REBA/REVELATION SOLO AIR SPRING)
	MAXLE	
28a	00.4318.005.002	AXLE MAXLE LITE FRONT, 15X100, LENGTH 148MM, THREAD LENGTH 9MM, THREAD PITCH M15X1.50 - REBA/REVELATION/RECON/SEKTOR/XC32/SID/SID SL/SID 35MM
28a	00.4318.005.004	AXLE MAXLE STEALTH FRONT, 15X100, LENGTH 148MM, THREAD LENGTH 9MM, THREAD PITCH M15X1.50 (NOT COMPATIBLE WITH RS-1) - 15X100, SID SL, SID 35MM
28b	00.4318.005.018	AXLE MAXLE STEALTH FRONT, 15X100, LENGTH 148MM, THREAD LENGTH 9MM, THREAD PITCH M15X1.50 (NOT COMPATIBLE WITH RS-1) - 15X100, SID SL, SID 35MM
28b	00.4318.005.019	AXLE MAXLE STEALTH FRONT, 15X110, LENGTH 158MM, THREAD LENGTH 9MM, THREAD PITCH M15X1.50 - BOOST COMPATIBLE
29	11.4318.004.001	AXLE MAXLE - LITE 15MM XC LEVER ASSEMBLY
	SPARES	
30	11.4308.327.002	AIR VALVE KIT - SCHRADER CORE (QTY 2) - FORKS/SHOCKS/REVERB
bulk	11.4015.259.000	FORK CRUSH WASHERS - 8MM (QTY 50)
bulk	11.4015.260.000	FORK CRUSH WASHER RETAINER - 8MM (QTY 50)
7	11.4310.697.000	FORK FOAM RING KIT - 32MM X 3.5MM (QTY 20) - SID/REBA/PIKE 2005-2006
7	11.4018.028.015	FORK FOAM RING KIT - 32MM X 4MM (QTY 20) - SID RLC A1/SID XX/RL B1 (2017+)/RECON BOOST RL C1/TK B1 (2020+)
	TOOLS/GREASE/FLUIDS	
ns	00.4318.031.000	FORK LOWER LEG DUST SEAL INSTALLATION TOOL 32MM (FOR FLANGELESS AND FLANGED DUST SEALS)
ns	00.4315.023.010	HIGH-PRESSURE FORK/SHOCK PUMP (300 PSI MAX) ROCKSHOX
ns	00.4315.023.040	HIGH-PRESSURE FORK/SHOCK PUMP (300 PSI MAX) ROCKSHOX DIGITALGAUGE
ns	00.4315.022.010	REAR SHOCK SCHRADER VALVE REMOVAL TOOL ROCKSHOX
ns	11.4308.722.000	FORK LOWER LEG DUST SEAL INSTALLATION TOOL (32MM)
ns	11.4315.021.020	ROCKSHOX SUSPENSION OIL, 5WT, 120ML BOTTLE - FORK DAMPER
ns	11.4015.354.010	ROCKSHOX SUSPENSION OIL, 5WT, 1 LITER BOTTLE - FORK DAMPER
ns	11.4315.021.040	ROCKSHOX SUSPENSION OIL, 15WT, 120ML BOTTLE - LOWER LEGS
ns	11.4015.354.030	ROCKSHOX SUSPENSION OIL, 15WT, 1 LITER BOTTLE - LOWER LEGS
ns	00.4318.008.000	GREASE SRAM BUTTER 20ML SYRINGE, FRICTION REDUCING GREASE BYSLICKOLEUM - DOUBLE TIME HUB PAWLS, FORKS & REVERB SERVICE
ns	00.4318.008.001	GREASE SRAM BUTTER 1OZ CONTAINER, FRICTION REDUCING GREASE BY SLICKOLEUM - DOUBLE TIME HUB PAWLS, FORKS & REVERB SERVICE

SID (35MM) SELECT/SELECT+/ULTIMATE C1 (2021)

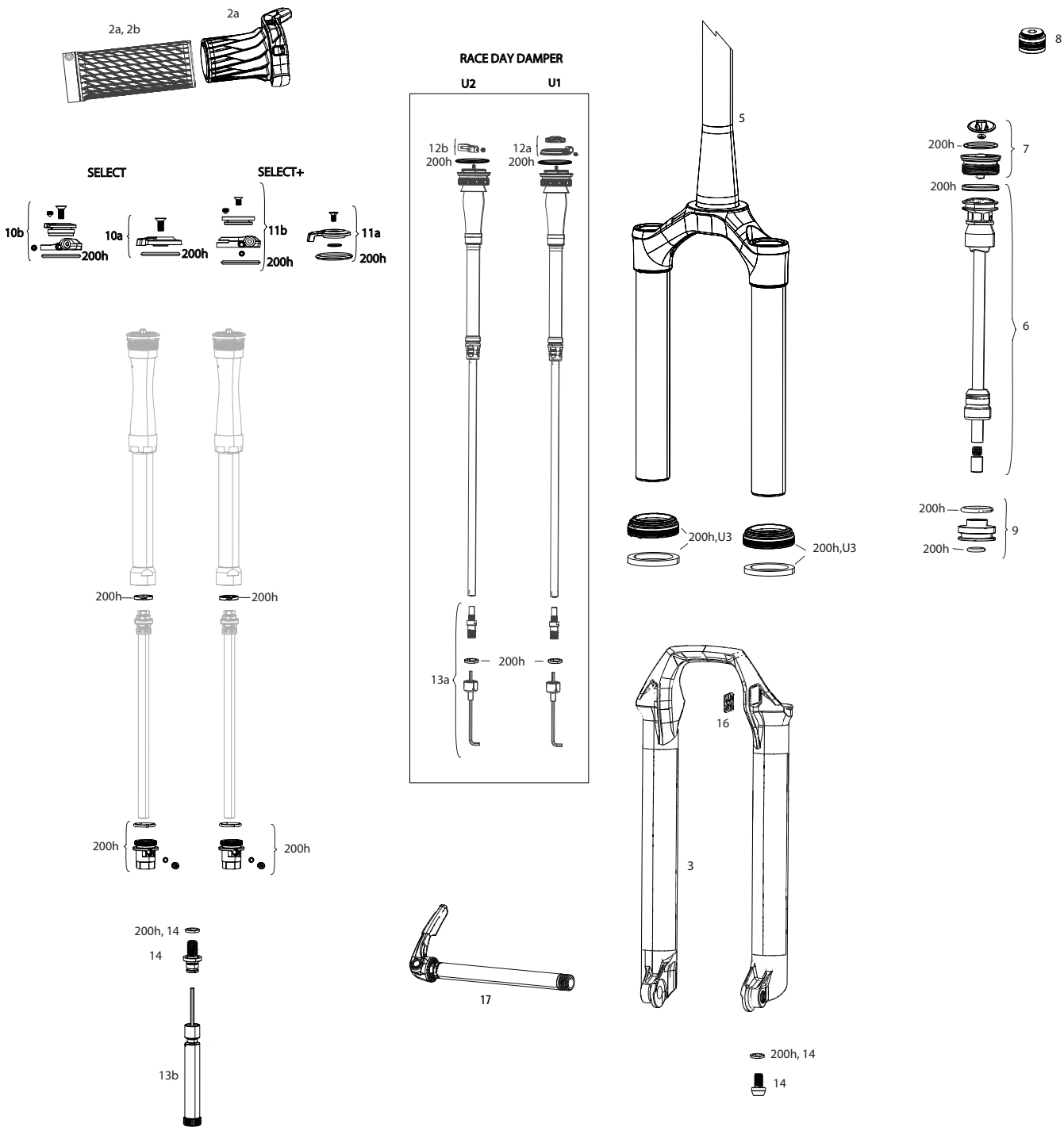

Note:

1. Convert from Crown Adjust to Cable Remote Adjust: complete damper upgrade kit
2. Decal and Maxle pages can be found in back of the catalog.
3. 158mm boost Maxle not compatible with 35mm SID C1, use 15x100 Maxle. See parts page for compatible parts.

SID (35MM) SELECT/SELECT+/ULTIMATE C1 (2021)

	UPGRADE	
U1	00.4020.546.003	DAMPER UPGRADE KIT - CHARGER RACE DAY REMOTE (INCLUDES COMPLETE RIGHT SIDE INTERNALS, REMOTE SOLD SEPARATELY) - 35MM 120MM MAX TRAVEL - SID (C1+/2021+)
U2	00.4020.546.002	DAMPER UPGRADE KIT - CHARGER RACE DAY CROWN (INCLUDES COMPLETE RIGHT SIDE INTERNALS) - 35MM 120MM MAX TRAVEL - SID (C1+/2021+)
U3	00.4318.045.004	FORK DUST WIPER UPGRADE KIT - 35MM BLACK FLANGELESS ULTRA-LOW FRICTION SKF SEALS (INCLUDES DUST WIPERS, 4MM & 6MM FOAM RINGS-PIKE/LYRIKB1/YARI/ REVELATION/BOXXER/DOMAIN/35/SID35MM
ns	00.4318.046.001	ROCKSHOX MTB FENDER BLACK SHORT - SID 35MM (C1+/2021+) V2
	SERVICE	
200h	00.4318.025.160	200 HOUR/1 YEAR SERVICE KIT (INCLUDES DUST SEALS, FOAM RINGS, O-RING SEALS, CHARGER RL SEALHEAD) SID 35MM SELECT C1 (2021)
200h	00.4318.025.170	200 HOUR/1 YEAR SERVICE KIT (INCLUDES DUST SEALS, FOAM RINGS, O-RING SEALS, SELECT+ CHARGER SEALHEAD) SID 35MM SELECT+ C1/SID 35MM ULTIMATE (2021)
	REMOTE	
2a	00.4318.024.000	REMOTE - TWISTLOC FULL SPRINT LEFT 10MM CABLE PULL (INCLUDES STRAIT & CURVED CABLE GUIDES, LEFT & RIGHT GRIPS) - METRIC REAR SHOCKS, RL (2013+) & CHARGER DAMPERS
2b	00.4318.026.000	LOCKING GRIPS FOR TWISTLOC 77/125MM WITH BLACK CLAMPS AND END PLUG
	LOWER LEG	
3	11.4018.091.032	FORK LOWER LEG - (FOIL DECALS INCLUDED) 29 15X110 BOOST™ BLUE -SID (35MM) ULTIMATE 100-120MM C1 (2021)
3	11.4018.091.033	FORK LOWER LEG - (FOIL DECALS INCLUDED) 29 15X110 BOOST™ GLOSS BLACK -SID (35MM) ULTIMATE 100-120MM C1 (2021)
3	11.4018.091.034	FORK LOWER LEG - (DECALS INCLUDED) 29 15X110 BOOST™ DIFFUSION BLACK - SID SID (35MM) SELECT/SELECT+ 100-120MM C1 (2021)
3	11.4018.091.041	FORK LOWER LEG - (CUSTOM DECALS INCLUDED) 29 15X110 BOOST™ BLUE/PURPLE FADE -SID (35MM) ULTIMATE 100-120mm C1 (2021) - SCOTT
	CSU	
5	11.4018.090.027	FORK CSU - DEBONAIR 29 BOOST™ 44 OFF-SET ALUMINUM TAPER BLACK ANO SID (35MM) ULTIMATE C1 100-120MM (2021)
5	11.4018.090.028	FORK CSU - DEBONAIR 29 BOOST™ 44 OFF-SET ALUMINUM TAPER DIFFUSION DIFFUSION BLACK SID (35MM) SELECT/SELECT+ C1 100-120MM (2021)
	SPRING	
6	11.4018.111.006	FORK SPRING DEBONAIR SHAFT - (INCLUDES AIR SHAFT AND BUMPERS) 100MM-29 (35MM) - SID C1 (2021)
6	11.4018.111.007	FORK SPRING DEBONAIR SHAFT - (INCLUDES AIR SHAFT AND BUMPERS) 110MM-29 (35MM) - SID C1 (2021)
6	11.4018.111.008	FORK SPRING DEBONAIR SHAFT - (INCLUDES AIR SHAFT AND BUMPERS) 120MM-29 (35MM) - SID C1 (2021)
7	11.4018.083.000	FORK SPRING AIR TOP CAP - 35MM (.5MM THREAD PITCH) BOOST™ 15X110 (INCLUDES SPLINED TOP CAP & VALVE COVER) - LYRIK A1+/YARI A1+/PIKE B1+/REVELATION A1+(35MM)/ BOXXER 35MM/SID35MM
8	11.4018.032.000	FORK SPRING BOTTOMLESS TOKENS - 35MM/38MM SOLO AIR/DEBONAIR (QTY 3) - PIKE/BOXXER B1/LYRIK B1/YARI/SID 35MM/ZEB
8	11.4018.032.001	FORK SPRING BOTTOMLESS TOKENS - 35MM/38MM SOLO AIR/DEBONAIR (QTY 10) PIKE/BOXXER B1/LYRIK B1/YARI/SID 35MM/ZEB
9	11.4018.096.003	FORK SPRING SEALHEAD - 35MM DEBONAIR (INCLUDES SEALHEAD ASSY) SID 35MM C1 (2021)
	DAMPER	
10a	11.4018.082.018	FORK COMPRESSION DAMPER KNOB KIT - CROWN CHARGER RL (INCLUDES KNOB & SCREW) - SID 35MM SELECT C1 (2021)
10b	11.4018.082.017	FORK COMPRESSION DAMPER KNOB KIT - REMOTE 10MM (ONELOC, TWISTLOC) CHARGER RL (INCLUDES SPOOL, CABLE CLAMP, SCREW) - SID 35MM SELECT C1 (2021)
11a	11.4018.082.020	FORK COMPRESSION DAMPER KNOB KIT - CROWN CHARGER2 RL (INCLUDES KNOB & SCREW) - SID 35MM SELECT+ C1 (2021)
11b	11.4018.082.019	FORK COMPRESSION DAMPER KNOB KIT - REMOTE 10MM (ONELOC, TWISTLOC) CHARGER2 RL (INCLUDES SPOOL, CABLE CLAMP, SCREW) - SID 35MM SELECT+ C1 (2021)
12a	11.4018.082.023	FORK COMPRESSION DAMPER KNOB KIT - CROWN RACE DAY DAMPER (INCLUDES KNOB & SCREW) - SID/SID SL(2021)
12b	11.4018.082.022	FORK COMPRESSION DAMPER KNOB KIT - REMOTE 10MM (2013+ PUSHLOC, ONELOC, TWISTLOC) RACE DAY DAMPER (INCLUDES SPOOL, CABLE CLAMP, SCREW) - SID/SID SL C1 (2021)
13a	11.4018.082.024	FORK REBOUND DAMPER KNOB KIT - (INCLUDES COMPLETE REBOUND CONTROLS) - RACE DAY DAMPER- SID/SID SL C1 (2021)
13b	11.4018.082.014	FORK REBOUND DAMPER KNOB KIT - (INCLUDES ADJUSTER KNOB & BOLT) 29 REBA A7 (2018+)/SID B2-B4 (2017-2020)/SID SELECT C1/SID SL SELECT C1/SID RLC3 (2021)
ns	11.4018.104.021	FORK DAMPER ASSEMBLY - REMOTE CHARGER2 3P (35MM) 100-120MM 29 (INCLUDES DAMPER ASSEMBLY) - SID SELECT/SELECT+ C1 (2020) - SCOTT
ns	11.4018.104.022	FORK DAMPER ASSEMBLY - REMOTE RACE DAY 3P (35MM) 100-120MM 29 (INCLUDES DAMPER ASSEMBLY) - SID ULTIMATE C1 (2020) - SCOTT
	SPARES	
ns	11.4308.327.002	AIR VALVE KIT - SCHRADER CORE (QTY 2) - FORKS/SHOCKS/REVERB
14	11.4015.403.100	FORK SHAFT FASTENER KIT - (INCLUDES SHAFT BOLTS & CRUSH WASHERS) - YARI A1+ (2016+), LYRIK A1-A2 (2010-2016), SID B1-C1 (2021), REVELATION RC A1-A2 (2018-2020)
bulk	11.4015.259.000	FORK CRUSH WASHERS - 8MM (QTY 50)
16	11.4018.115.000	FORK HOSE CLAMP - SID C1 (2021)/SID SL C1 (2021)
bulk	11.4018.116.000	FORK FOAM RING KIT - 35MM X 4MM (QTY 20) - SID 35MM
17	00.4318.005.001	AXLE MAXLE ULTIMATE FRONT, 15X100, LENGTH 146.5MM, THREAD LENGTH 9MM, THREAD PITCH M15X1.50 - 15X100, RS1, SID SL, SID 35MM
17	00.4318.005.002	AXLE MAXLE LITE FRONT, 15X100, LENGTH 148MM, THREAD LENGTH 9MM, THREAD PITCH M15X1.50 - 15X100, SID SL, SID 35MM
17	00.4318.005.018	AXLE MAXLE STEALTH FRONT, 15X100, LENGTH 148MM, THREAD LENGTH 9MM, THREAD PITCH M15X1.50 (NOT COMPATIBLE WITH RS-1) - 15X100, SID SL, SID 35MM
	TOOLS/GREASE/FLUIDS	
ns	00.4318.032.000	FORK LOWER LEG DUST SEAL INSTALLATION TOOL 35MM (FOR FLANGELESS AND FLANGED DUST SEALS)
ns	00.4315.023.010	HIGH-PRESSURE FORK/SHOCK PUMP (300 PSI MAX) ROCKSHOX
ns	00.4315.023.040	HIGH-PRESSURE FORK/SHOCK PUMP (300 PSI MAX) ROCKSHOX DIGITALGAUGE
ns	00.4315.022.010	REAR SHOCK SCHRADER VALVE REMOVAL TOOL ROCKSHOX
ns	00.4318.007.000	RockShox Charger Damper Standard Bleed Kit (includes Syringe, Charger1 fitting, Standard fitting, Suspension Oil 3w) - Charger/RaceDay dampers
ns	11.4315.021.080	ROCKSHOX SUSPENSION OIL, 0W-30, 120ML BOTTLE - PIKE/REVELATION 2018+/LYRIK B1/YARI/SID 2020+ LOWER LEGS
ns	11.4015.354.050	ROCKSHOX SUSPENSION OIL, 0-W30, 1 LITER BOTTLE - PIKE/REVELATION 2018+/LYRIK B1/YARI/SID 2020+ LOWER LEGS
ns	11.4115.094.030	MAXIMA SUSPENSION OIL PLUSH, 3WT 1 LITER BOTTLE - REAR SHOCK/CHARGER DAMPER
ns	11.4115.094.030	MAXIMA SUSPENSION OIL PLUSH, 3WT 1 LITER BOTTLE - REAR SHOCK/CHARGER DAMPER
ns	00.4318.029.000	FORK CHARGER RC VICE BLOCKS - 27.35MM (USED TO REMOVE SEALHEAD) - RVL RC/YARI RC/BOXXER RC/SID SELECT/PIKE SELECT/LYRIK SELECT/BOXXER SELECT
ns	00.4318.008.002	GREASE ROCKSHOX DYNAMIC SEAL GREASE (PTFE) 10Z - RECOMMENDED FOR SERVICING REAR SHOCKS & FORKS
ns	00.4318.008.004	GREASE ROCKSHOX DYNAMIC SEAL GREASE 500ML - RECOMMENDED FOR SERVICING REAR SHOCKS & FORKS

SID SL (32MM) SELECT/SELECT+/ULTIMATE C1 (2021)

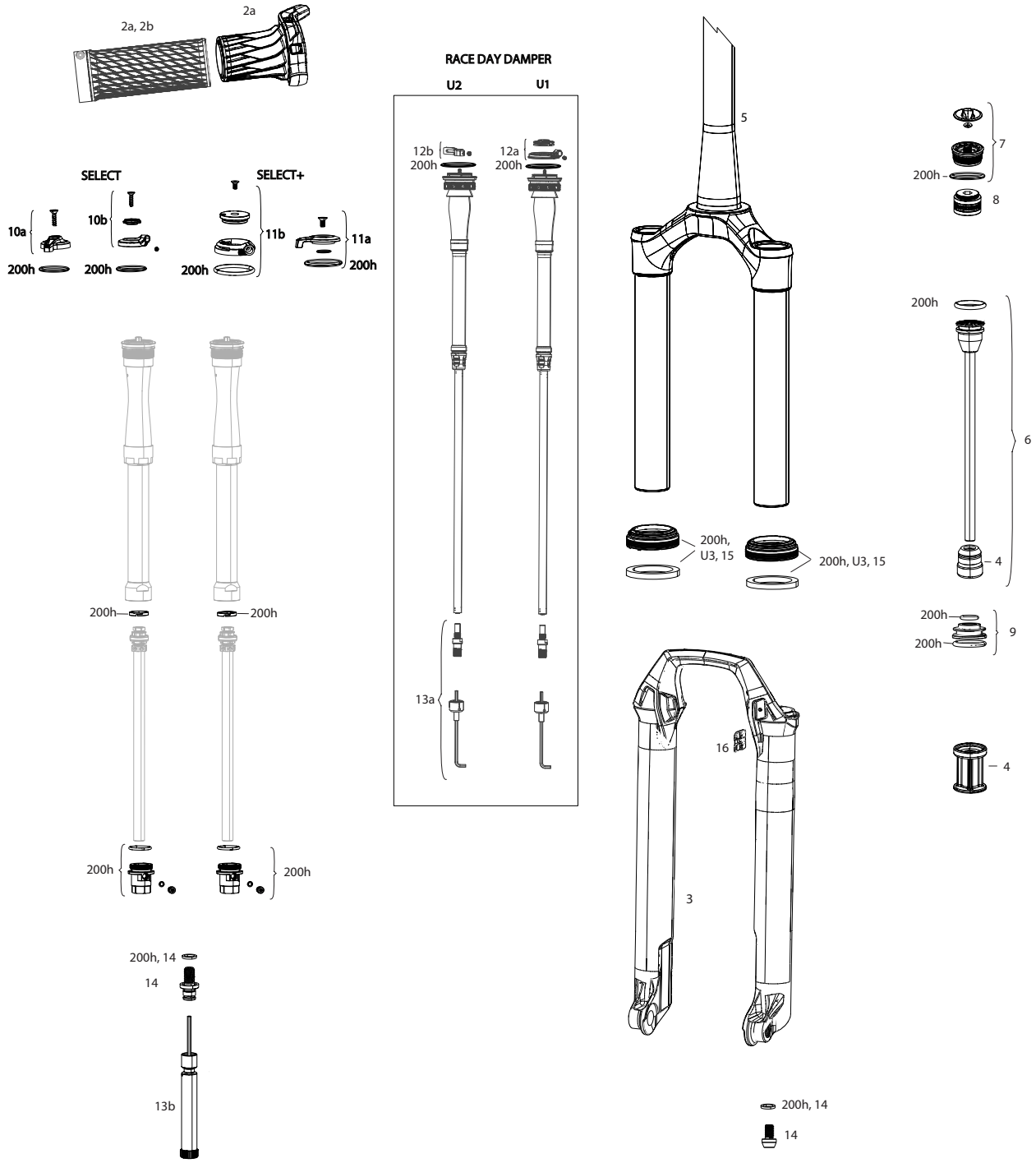

Note:

1. Convert from Crown Adjust to Cable Remote Adjust: complete damper upgrade kit
2. Decal and Maxle pages can be found in back of the catalog.
3. 158mm boost Maxle not compatible with 32mm SID C1, use 15x100 Maxle. See parts page for compatible parts.

SID SL (32MM) SELECT/SELECT+/ULTIMATE C1 (2021)

	UPGRADE	
U1	00.4020.546.001	DAMPER UPGRADE KIT - CHARGER RACE DAY REMOTE (INCLUDES COMPLETE RIGHT SIDE INTERNALS, REMOTE SOLD SEPARATELY) - 32MM 100MM MAX TRAVEL - REBA A7 80-100MM (2018+)/SID 100 A1 (2017+)
U2	00.4020.546.000	DAMPER UPGRADE KIT - CHARGER RACE DAY CROWN (INCLUDES COMPLETE RIGHT SIDE INTERNALS) - 32MM 100MM MAX TRAVEL - REBA A7 80-100MM (2018+)/SID 100 A1 (2017+)
U3	00.4318.045.003	FORK DUST WIPER UPGRADE KIT - 32MM BLACK FLANGELESS ULTRA-LOW FRICTION SKF SEALS (INCLUDES DUST WIPERS & 4MM FOAM RINGS) - BLUTO/RS-1/SID B1 (2017+)/32MM BOOST™ FORKS
	SERVICE	
200h	00.4318.025.060	200 HOUR/1 YEAR SERVICE KIT (INCLUDES DUST SEALS, FOAM RINGS, O-RING SEALS, CHARGER RL SEALHEAD) SID SELECT B4 (2020), SID SL SELECT C1 (2021)
200h	00.4318.025.070	200 HOUR/1 YEAR SERVICE KIT (INCLUDES DUST SEALS, FOAM RINGS, O-RING SEALS, CHARGER 2 RL SEALHEAD) -SID RL B2 80-100MM (2018+)/SELECT + B4 80-100MM (2020), SID SL SELECT+ C1 (2021)
200h	00.4318.025.080	200 HOUR/1 YEAR SERVICE KIT (INCLUDES DUST SEALS, FOAM RINGS, O-RING SEALS, CHARGER 2 RLC SEALHEAD) - SID RLC A1+ (2017-2019)/ULTIMATE B4 (2020)
	REMOTE	
2a	00.4318.024.000	REMOTE - TWISTLOC FULL SPRINT LEFT 10MM CABLE PULL (INCLUDES STRAIT & CURVED CABLE GUIDES, LEFT & RIGHT GRIPS) - METRIC REAR SHOCKS, RL (2013+) & CHARGER DAMPERS
2b	00.4318.026.000	LOCKING GRIPS FOR TWISTLOC 77/125MM WITH BLACK CLAMPS AND END PLUG
	LOWER LEG	
3	11.4018.091.029	FORK LOWER LEG - (FOIL DECALS INCLUDED) 29 15X110 BOOST™ BLUE -SID SL (32MM) ULTIMATE 80-100MM C1 (2021)
3	11.4018.091.030	FORK LOWER LEG - (FOIL DECALS INCLUDED) 29 15X110 BOOST™ GLOSS BLACK -SID SL (32MM) ULTIMATE 80-100MM C1 (2021)
3	11.4018.091.031	FORK LOWER LEG - (DECALS INCLUDED) 29 15X110 BOOST™ DIFFUSION BLACK - SID SL (32MM) SELECT/SELECT+ C1 80-100MM (2021)
4	11.4018.072.000	FORK LOWER LEG BUMP STOP - 29 - SID RLC A1/SID XX/RL B1 (2017+)/ SID B4 (2020)/SID SL C1 (2021)
	CSU	
5	11.4018.090.025	FORK CSU - DEBONAIR 29 BOOST™ 44 OFF-SET ALUMINUM TAPER BLACK ANO SID SL (32MM) ULTIMATE C1 80-100MM (2021)
5	11.4018.090.026	FORK CSU - DEBONAIR 29 BOOST™ 44 OFF-SET ALUMINUM TAPER DIFFUSION BLACK SID SL (32MM) SELECT/SELECT+ 80-100MM (2021)
	SPRING	
6	11.4018.111.009	FORK SPRING DEBONAIR SHAFT - (INCLUDES AIR SHAFT AND BUMPERS) 80MM-29 (32MM) - SID SL C1 (2021)
6	11.4018.111.010	FORK SPRING DEBONAIR SHAFT - (INCLUDES AIR SHAFT AND BUMPERS) 100MM-29 (32MM) - SID SL C1 (2021)
9	11.4018.096.004	FORK SPRING SEALHEAD - 32MM DEBONAIR (INCLUDES SEALHEAD ASSY) SID SL 32MM C1 (2021)
7	11.4018.012.011	FORK SPRING AIR TOP CAP - 32MM SPLINE (INCLUDES TOP CAP, VALVE COVER, USES CASSETTE TOOL) - SID B1-B4 (2017-2020)/SID SL C1 (2021)/REBA A7 (2018+), REBA 26 (2020+)
8	11.4018.032.003	FORK SPRING BOTTOMLESS TOKENS - SOLO AIR/DEBONAIR (QTY 5) - SID/REBA/REVELATION/RS-1/BLUTO/ARGYLE RCT SOLO AIR/35G
	DAMPER	
10a	11.4018.082.010	FORK COMPRESSION DAMPER KNOB KIT - CROWN CHRC (INCLUDES KNOB & SCREW) - SID SELECT B4 (2020), SID SL SELECT C1 (2021)
10b	11.4018.082.011	FORK COMPRESSION DAMPER KNOB KIT - REMOTE 10MM (ONELOC, TWISTLOC) CHRC (INCLUDES SPOOL, CABLE CLAMP, SCREW) - SID SELECT B4 (2020)/SID SL SELECT C1 (2021)
11a	11.4018.082.012	FORK COMPRESSION DAMPER KNOB KIT - CROWN CHARGER2 RL (INCLUDES KNOB & SCREW) - SID SELECT+ B4 (2020)/SID SL SELECT+ C1 (2021)
11b	11.4018.082.013	FORK COMPRESSION DAMPER KNOB KIT - REMOTE 10MM (ONELOC, TWISTLOC) CHARGER RL (INCLUDES SPOOL, CABLE CLAMP, SCREW) - SID SELECT+ B4 (2020)/SID SL SELECT+ C1 (2021)
12a	11.4018.082.022	FORK COMPRESSION DAMPER KNOB KIT - REMOTE 10MM (2013+ PUSHLOC, ONELOC, TWISTLOC) RACE DAY DAMPER (INCLUDES SPOOL, CABLE CLAMP, SCREW) - SID/SID SL C1 (2021)
12b	11.4018.082.023	FORK COMPRESSION DAMPER KNOB KIT - CROWN RACE DAY DAMPER (INCLUDES KNOB & SCREW) - SID/SID SL(2021)
13a	11.4018.082.024	FORK REBOUND DAMPER KNOB KIT - (INCLUDES COMPLETE REBOUND CONTROLS) - RACE DAY DAMPER- SID/SID SL C1 (2021)
13b	11.4018.082.014	FORK REBOUND DAMPER KNOB KIT - (INCLUDES ADJUSTER KNOB & BOLT) 29 REBA A7 (2018+)/SID B2-B4 (2017-2020)/SID SELECT C1/SID SL SELECT C1/SID RLC3 (2021)
ns	11.4018.104.002	FORK DAMPER ASSEMBLY - REMOTE CHARGER2 RLC3 (32MM) 100MM 29 (INCLUDES DAMPER ASSEMBLY) - SID B4 (2019), SID SL C1 (2020) - SCOTT
ns	11.4018.104.023	FORK DAMPER ASSEMBLY - REMOTE CHARGER 3P (35MM) 130-150MM 29 (INCLUDES DAMPER ASSEMBLY) - REVELATION A3 (2020) - SCOTT
	SPARES	
ns	11.4308.327.002	AIR VALVE KIT - SCHRADER CORE (QTY 2) - FORKS/SHOCKS/REVERB
14	11.4015.403.100	FORK SHAFT FASTENER KIT - (INCLUDES SHAFT BOLTS & CRUSH WASHERS) - YARI A1+ (2016+), LYRIK A1-A2 (2010-2016), SID B1-C1 (2021), REVELATION RC A1-A2 (2018-2020)
bulk	11.4015.259.000	FORK CRUSH WASHERS - 8MM (QTY 50)
16	11.4018.115.000	FORK HOSE CLAMP - SID C1 (2021)/SID SL C1 (2021)
15	11.4018.028.001	FORK DUST WIPER KIT - 32MM BLACK (INCLUDES FLANGED DUST WIPER & 5MM FOAM RINGS) - SID A1-A3 /REBA A1-A4/SID SL C1 (2021)
bulk	11.4015.496.010	FORK FOAM RING KIT - 32MM X 5MM (QTY 20) - SID A1-A3 /REBA A2-A3/BLUTO A1/SID SL C1 (2021)
ns	00.4318.005.001	AXLE MAXLE ULTIMATE FRONT, 15X100, LENGTH 146.5MM, THREAD LENGTH 9MM, THREAD PITCH M15X1.50 - 15X100, RS1, SID SL, SID 35MM
ns	00.4318.005.002	AXLE MAXLE LITE FRONT, 15X100, LENGTH 148MM, THREAD LENGTH 9MM, THREAD PITCH M15X1.50 - 15X100, SID SL, SID 35MM
ns	00.4318.005.018	AXLE MAXLE STEALTH FRONT, 15X100, LENGTH 148MM, THREAD LENGTH 9MM, THREAD PITCH M15X1.50 (NOT COMPATIBLE WITH RS-1) - 15X100, SID SL, SID 35MM
	TOOLS/GREASE/FLUIDS	
ns	00.4318.031.000	FORK LOWER LEG DUST SEAL INSTALLATION TOOL 32MM (FOR FLANGELESS AND FLANGED DUST SEALS)
ns	00.4315.023.010	HIGH-PRESSURE FORK/SHOCK PUMP (300 PSI MAX) ROCKSHOX
ns	00.4315.023.040	HIGH-PRESSURE FORK/SHOCK PUMP (300 PSI MAX) ROCKSHOX DIGITALGAUGE
ns	00.4315.022.010	REAR SHOCK SCHRADER VALVE REMOVAL TOOL ROCKSHOX
ns	00.4318.007.000	RockShox Charger Damper Standard Bleed Kit (includes Syringe, Charger1 fitting, Standard fitting, Suspension Oil 3w) - Charger/RaceDay dampers
ns	11.4315.021.080	ROCKSHOX SUSPENSION OIL, 0W-30, 120ML BOTTLE - PIKE/REVELATION 2018+/LYRIK B1/YARI/SID 2020+ LOWER LEGS
ns	11.4015.354.050	ROCKSHOX SUSPENSION OIL, 0-W30, 1 LITER BOTTLE - PIKE/REVELATION 2018+/LYRIK B1/YARI/SID 2020+ LOWER LEGS
ns	11.4115.094.030	MAXIMA SUSPENSION OIL PLUSH, 3WT 1 LITER BOTTLE - REAR SHOCK/CHARGER DAMPER
ns	11.4115.094.030	MAXIMA SUSPENSION OIL PLUSH, 3WT 1 LITER BOTTLE - REAR SHOCK/CHARGER DAMPER
ns	00.4318.029.000	FORK CHARGER RC VICE BLOCKS - 27.35MM (USED TO REMOVE SEALHEAD) - RVL RC/YARI RC/BOXXER RC/SID SELECT/PIKE SELECT/LYRIK SELECT/BOXXER SELECT
ns	00.4318.008.002	GREASE ROCKSHOX DYNAMIC SEAL GREASE (PTFE) 1OZ - RECOMMENDED FOR SERVICING REAR SHOCKS & FORKS
ns	00.4318.008.004	GREASE ROCKSHOX DYNAMIC SEAL GREASE 500ML - RECOMMENDED FOR SERVICING REAR SHOCKS & FORKS

SID (32MM) SELECT/SELECT+/ULTIMATE B4 (2020)

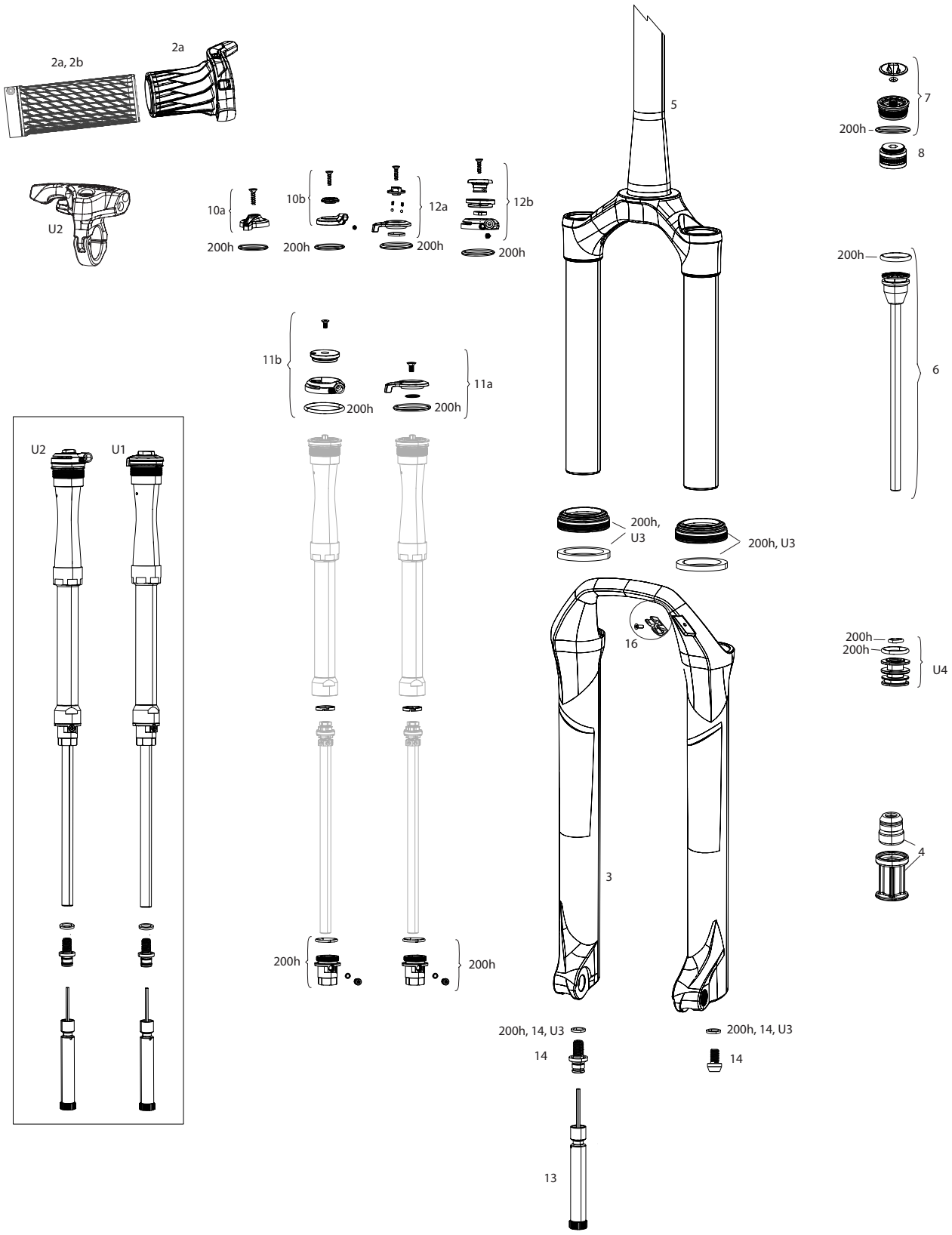

Note:

1. 2020 SID models require exact oil and grease type called out on service kit label and in the service manual. See www.sram.com/service for more info.
2. Convert from Crown Adjust to Cable Remote Adjust: Remote compression damper, remote compression adjuster spool, cable clamp and remote lever assembly.
3. SID chassis and internals may be travel-specific. See part kit descriptions for identification.
4. Decal and Maxle pages can be found in back of the catalog.

SID (32MM) SELECT/SELECT+/ULTIMATE B4 (2020)

	UPGRADES	
U1	00.4018.783.010	DAMPER UPGRADE KIT - CHARGER RLC,100 MAX TRAVEL, REMOTE (INCLUDES RIGHT SIDE INTERNALS & ONELOC REMOTE) - SID RLC (A1-B1/2017-2019)/SID RL,XX,WC(B1+/ 2017+)/REBA RL(A7+/2018+)
U2	00.4018.783.011	DAMPER UPGRADE KIT - CHARGER RLC,120 MAX TRAVEL, REMOTE (INCLUDES RIGHT SIDE INTERNALS & ONELOC REMOTE) - SID27/29(A2-A4/2012-2016),SID120(B1-B4/2020,REBA27/29(A1+/2012+)/BLUTOA1+
U1	00.4018.783.003	DAMPER UPGRADE KIT - CHARGER2 RLC CROWN 120MM MAX TRAVEL (INCLUDES COMPLETE RIGHT SIDE INTERNALS) - SID27/29(A2-A4/2012-2016),SID120(B1-B4/2020,REBA27/29(A1+/2012+)/BLUTOA1+
U2	00.4018.783.009	DAMPER UPGRADE KIT - CHARGER RLC,100 MAX TRAVEL, CROWN ADJUST (INCLUDES COMPLETE RIGHT SIDE INTERNALS) - SID RLC (A1-B1/2017-2019)/SID RL,XX,WC(B1+/ 2017+)/REBA RL(A7+/2018+)
U3	00.4318.045.003	FORK DUST WIPER UPGRADE KIT - 32MM BLACK FLANGELESS ULTRA-LOW FRICTION SKF SEALS (INCLUDES DUST WIPERS & 4MM FOAM RINGS) - BLUTO/RS-1/SID B1 (2017+)/32MM BOOST™ FORKS
U4	11.4018.096.001	FORK SPRING SEALHEAD - 32MM DEBONAIR RED (REPLACES FLOATING SEALHEAD, BASEPLATE & WAVE WASHER) SID RLC A1(2017-2019)/RL B1-B2(2017-2019)/B4(2020+)
2a	00.4318.024.000	REMOTE - TWISTLOC FULL SPRINT LEFT 10MM CABLE PULL (INCLUDES STRAIT & CURVED CABLE GUIDES, LEFT & RIGHT GRIPS) - METRIC REAR SHOCKS, RL (2013+) & CHARGER DAMPERS
2b	00.4318.026.000	LOCKING GRIPS FOR TWISTLOC 77/125MM WITH BLACK CLAMPS AND END PLUG
	SERVICE	
200h	00.4318.025.060	200 HOUR/1 YEAR SERVICE KIT (INCLUDES DUST SEALS, FOAM RINGS, O-RING SEALS, CHARGER RL SEALHEAD) SID SELECT B4 (2020), SID SL SELECT C1 (2021)
200h	00.4318.025.070	200 HOUR/1 YEAR SERVICE KIT (INCLUDES DUST SEALS, FOAM RINGS, O-RING SEALS, CHARGER 2 RL SEALHEAD) -SID RL B2 80-100MM (2018+)/SELECT + B4 80-100MM (2020), SID SL SELECT+ C1 (2021)
200h	00.4318.025.080	200 HOUR/1 YEAR SERVICE KIT (INCLUDES DUST SEALS, FOAM RINGS, O-RING SEALS, CHARGER 2 RLC SEALHEAD) - SID RLC A1+ (2017-2019)/ULTIMATE B4 (2020)
200h	00.4318.025.110	200 HOUR/1 YEAR SERVICE KIT (INCLUDES DUST SEALS, FOAM RINGS, O-RING SEALS, CHARGER 2 RL SEALHEAD) -SID RL B2 110-120MM (2018+)/SELECT + B4 110-120MM (2020)
	LOWER LEG	
3	11.4018.091.010	FORK LOWER LEG - (FOIL DECALS INCLUDED) 27 15X110 BOOST™ BLUE -SID ULTIMATE 80-100MM B4 (2020+)
3	11.4018.091.011	FORK LOWER LEG - (FOIL DECALS INCLUDED) 29 15X110 BOOST™ BLUE -SID ULTIMATE 80-100MM B4 (2020+)
3	11.4018.091.012	FORK LOWER LEG - (FOIL DECALS INCLUDED) 29 15X110 BOOST™ BLUE -SID ULTIMATE 110-120MM B4 (2020+)
3	11.4018.091.013	FORK LOWER LEG - (FOIL DECALS INCLUDED) 27 15X110 BOOST™ GLOSS BLACK -SID ULTIMATE 80-100MM B4 (2020+)
3	11.4018.091.014	FORK LOWER LEG - (FOIL DECALS INCLUDED) 29 15X110 BOOST™ GLOSS BLACK -SID ULTIMATE 80-100MM B4 (2020+)
3	11.4018.091.015	FORK LOWER LEG - (FOIL DECALS INCLUDED) 29 15X110 BOOST™ GLOSS BLACK -SID ULTIMATE 110-120MM B4 (2020+)
3	11.4018.006.267	FORK LOWER LEG - (DECALS NOT INCLUDED) 27 15X110 BOOST™ DIFFUSION BLACK - SID RLC A1/SID XX/RL B1 (2017+) REBA A7 (2018+) SID SELECT/SELECT+ B4 80-100MM (2020+)
3	11.4018.006.264	FORK LOWER LEG - (DECALS NOT INCLUDED) 29 15X110 BOOST™ DIFFUSION BLACK - SID RLC A1/SID XX/RL B1 (2017+) REBA A7 (2018+) SID SELECT/SELECT+ B4 80-100MM (2020+)
3	11.4018.006.233	FORK LOWER LEG - (DECALS NOT INCLUDED) 29 15X110 BOOST™ DIFFUSION BLACK - SID A1-A4 (2011-2016),REBA (A1-A5/2012-2017), REBA A7 (2018+) SID SELECT/SELECT+ 110-120MM B4 (2020+)
3	11.4018.006.262	FORK LOWER LEG - (DECALS NOT INCLUDED) 29 15X110 BOOST™ BLACK - SID RLC A1/SID XX/RL B1 (2017+) REBA 80-100MM A7 (2018+) SID SELECT/SELECT+ B4 80-100MM (2020+)
3	11.4018.006.265	FORK LOWER LEG - (DECALS NOT INCLUDED) 27 15X110 BOOST™ BLACK - SID RLC A1/SID XX/RL B1 (2017+) REBA 80-100MM A7 (2018+) SID SELECT/SELECT+ B4 80-100MM (2020+)
3	11.4018.006.231	FORK LOWER LEG - (DECALS NOT INCLUDED) 29 15X110 BOOST™ BLACK - SID A1-A4 (2011-2016),REBA (A1-A5/2012-2017), REBA A7 120MM (2018+) SID SELECT/SELECT+ 110-120MM B4 (2020+)
4	11.4018.072.000	FORK LOWER LEG BUMP STOP - 29 - SID RLC A1/SID XX/RL B1 (2017+)/ SID B4 (2020)/SID SL C1 (2021)
4	11.4018.072.001	FORK LOWER LEG BUMP STOP - 27 - SID RLC A1/SID XX/RL B1 (2017+)/ SID B4 (2020+)
	CSU	
5	11.4018.090.010	FORK CSU - DEBONAIR 27/29 BOOST™ 42 OFF-SET ALUMINUM TAPER GLOSS BLACK SID ULTIMATE 80-100MM (2020+)
5	11.4018.090.011	FORK CSU - DEBONAIR 29 BOOST™ 51 OFF-SET ALUMINUM TAPER GLOSS BLACK SID ULTIMATE 80-100MM (2020+)
5	11.4018.090.012	FORK CSU - DEBONAIR 29 BOOST™ 51 OFF-SET ALUMINUM TAPER GLOSS BLACK SID ULTIMATE 110-120MM (2020+)
5	11.4018.090.013	FORK CSU - DEBONAIR 27/29 BOOST™ 42 OFF-SET ALUMINUM TAPER DIFFUSION BLACK SID ULTIMATE 80-100MM (2020+)
5	11.4018.090.014	FORK CSU - DEBONAIR 29 BOOST™ 51 OFF-SET ALUMINUM TAPER DIFFUSION BLACK SID ULTIMATE 80-100MM (2020+)
5	11.4018.090.015	FORK CSU - DEBONAIR 29 BOOST™ 51 OFF-SET ALUMINUM TAPER DIFFUSION BLACK SID ULTIMATE 110-120MM (2020+)
5	11.4018.008.527	FORK CSU - DEBONAIR/SOLO AIR 27 BOOST™ COMPATIBLE 42 OFF-SET CARBON TAPER DIFFUSION BLACK (NO GRADIENTS) - SID WC/SID RLC A1/SID XX/RL B1 (2017+)/ SID ULTIMATE CARBON B4 (2020+)
5	11.4018.008.525	FORK CSU - DEBONAIR/SOLO AIR 27 BOOST™ COMPATIBLE 42 OFF-SET CARBON TAPER BLACK (NO GRADIENTS) - SID WC/SID RLC A1/SID XX/RL B1 (2017+) SID ULTIMATE CARBON B4 (2020+)
5	11.4018.008.587	FORK CSU - DEBONAIR/SOLO AIR 2927+ BOOST™ COMPATIBLE 51 OFF-SET CARBON TAPER DIFFUSION BLACK (NO GRADIENTS) - SID WC/SID A1/SID XX/RL B1 (2017+)/ SID ULTIMATE CARBON B4 (2020+)
5	11.4018.090.024	FORK CSU - SOLO AIR 2927+ BOOST™ COMPATIBLE 51 OFF-SET CARBON TAPER GLOSS BLACK (NO GRADIENTS) - SID WC/SID RLC A1/SIDXX/RL B1/SID ULTIMATE CARBON (2020+)
ns	11.4306.531.000	FORK COMPRESSION PLUG -EXPANDER CARBON STEERER - SID
	SPRING	
6	11.4018.111.003	FORK SPRING DEBONAIR SHAFT - (INCLUDES AIR SHAFT AND RETAINING RING) 100MM-29 (32MM) - SID B4 (2020)
6	11.4018.111.004	FORK SPRING DEBONAIR SHAFT - (INCLUDES AIR SHAFT AND RETAINING RING) 100MM-27 (32MM) - SID B4 (2020)
6	11.4018.111.005	FORK SPRING DEBONAIR SHAFT - (INCLUDES AIR SHAFT AND RETAINING RING) 120MM-29 (32MM) - SID B4 (2020)
7	11.4018.012.011	FORK SPRING AIR TOP CAP - 32MM SPLINE (INCLUDES TOP CAP, VALVE COVER, USES CASSETTE TOOL) - SID B1-B4 (2017-2020)/SID SL C1 (2021)/REBA A7 (2018+), REBA 26 (2020+)
8	11.4018.032.003	FORK SPRING BOTTOMLESS TOKENS - SOLO AIR/DEBONAIR (QTY 5) - SID/REBA/REVELATION/RS-1/BLUTO/ARGYLE RCT SOLO AIR/35G
	DAMPER	
10a	11.4018.082.010	FORK COMPRESSION DAMPER KNOB KIT - CROWN CHRC (INCLUDES KNOB & SCREW) - SID SELECT B4 (2020), SID SL SELECT C1 (2021)
10b	11.4018.082.011	FORK COMPRESSION DAMPER KNOB KIT - REMOTE 10MM (ONELOC, TWISTLOC) CHRC (INCLUDES SPOOL, CABLE CLAMP, SCREW) - SID SELECT B4 (2020)/SID SL SELECT C1 (2021)
11a	11.4018.082.012	FORK COMPRESSION DAMPER KNOB KIT - CROWN CHARGER2 RL (INCLUDES KNOB & SCREW) - SID SELECT+ B4 (2020)/SID SL SELECT+ C1 (2021)
11b	11.4018.082.013	FORK COMPRESSION DAMPER KNOB KIT - REMOTE 10MM (ONELOC, TWISTLOC) CHARGER RL (INCLUDES SPOOL, CABLE CLAMP, SCREW) - SID SELECT+ B4 (2020)/SID SL SELECT+ C1 (2021)
12a	11.4015.547.180	FORK COMPRESSION DAMPER KNOB KIT - CROWN CHARGER RLC (INCLUDES KNOB & SCREW) - SID RLC A1/ SID ULTIMATE B4 (2020+)
12b	11.4015.547.181	FORK COMPRESSION DAMPER KNOB KIT - REMOTE 10MM (2013+ PUSHLOC, ONELOC, TWISTLOC) CHARGER RLC (INCLUDES SPOOL, CABLE CLAMP, SCREW) - SID RLC B1/ SID ULTIMATE B4 (2020+)
13	11.4018.082.014	FORK REBOUND DAMPER KNOB KIT - (INCLUDES ADJUSTER KNOB & BOLT) 29 REBA A7 (2018+)/SID B2-B4 (2017-2020)/SID SELECT C1/SID SL SELECT C1/SID RLC3 (2021)
13	11.4018.082.015	FORK REBOUND DAMPER KNOB KIT - (INCLUDES ADJUSTER KNOB & BOLT) - 27.5 - SID B2+ (2017+)/REBA A7 (2018+)
ns	11.4018.104.002	FORK DAMPER ASSEMBLY - REMOTE CHARGER2 RLC3 (32MM) 100MM 29 (INCLUDES DAMPER ASSEMBLY) - SID B4 (2019), SID SL C1 (2020) - SCOTT
	SPARES	
ns	11.4308.327.002	AIR VALVE KIT - SCHRADER CORE (QTY 2) - FORKS/SHOCKS/REVERB
14	11.4015.403.100	FORK SHAFT FASTENER KIT - (INCLUDES SHAFT BOLTS & CRUSH WASHERS) - YARI A1+ (2016+), LYRIK A1-A2 (2010-2016), SID B1-C1 (2021), REVELATION RC A1-A2 (2018-2020)
bulk	11.4015.259.000	FORK CRUSH WASHERS - 8MM (QTY 50)
bulk	11.4018.028.016	FORK DUST WIPER KIT - 32MM BLACK (INCLUDES FLANGELESS DUST WIPERS & 4MM FOAM RINGS) - SID RLCA1/SID XX/RL B1 (2017+) REBA A7 80-100MM (2018+)/RECON BOOST RLC1/TKB1 (2020+)
bulk	11.4018.028.015	FORK FOAM RING KIT - 32MM X 4MM (QTY 20) - SID RLC A1/SID XX/RL B1 (2017+)/RECON BOOST RL C1/TK B1 (2020+)
16	11.4015.534.011	FORK HOSE CLAMP - SID RLC A1/SID XX/RL B1-B4 (2017-2020) REBA A7 80-100MM (2018+)
	TOOLS/GREASE/FLUIDS	
ns	00.4318.031.000	FORK LOWER LEG DUST SEAL INSTALLATION TOOL 32MM (FOR FLANGELESS AND FLANGED DUST SEALS)
ns	00.4315.023.010	HIGH-PRESSURE FORK/SHOCK PUMP (300 PSI MAX) ROCKSHOX
ns	00.4315.023.040	HIGH-PRESSURE FORK/SHOCK PUMP (300 PSI MAX) ROCKSHOX DIGITALGAUGE
ns	00.4315.022.010	REAR SHOCK SCHRADER VALVE REMOVAL TOOL ROCKSHOX
ns	00.4318.007.000	RockShox Charger Damper Standard Bleed Kit (includes Syringe, Charger1 fitting, Standard fitting, Suspension Oil 3w) - Charger/RaceDay dampers
ns	11.4315.021.080	ROCKSHOX SUSPENSION OIL, 0W-30, 120ML BOTTLE - PIKE/REVELATION 2018+/LYRIK B1/YARI/SID 2020+ LOWER LEGS
ns	11.4015.354.050	ROCKSHOX SUSPENSION OIL, 0-W30, 1 LITER BOTTLE - PIKE/REVELATION 2018+/LYRIK B1/YARI/SID 2020+ LOWER LEGS
ns	11.4115.094.030	MAXIMA SUSPENSION OIL PLUSH, 3WT 1 LITER BOTTLE - REAR SHOCK/CHARGER DAMPER
ns	11.4115.094.030	MAXIMA SUSPENSION OIL PLUSH, 3WT 1 LITER BOTTLE - REAR SHOCK/CHARGER DAMPER
ns	00.4318.029.000	FORK CHARGER RC VICE BLOCKS - 27.35MM (USED TO REMOVE SEALHEAD) - RVL RC/YARI RC/BOXXER RC/SID SELECT/PIKE SELECT/LYRIK SELECT/BOXXER SELECT
ns	00.4318.008.002	GREASE ROCKSHOX DYNAMIC SEAL GREASE (PTFE) 1OZ - RECOMMENDED FOR SERVICING REAR SHOCKS & FORKS
ns	00.4318.008.004	GREASE ROCKSHOX DYNAMIC SEAL GREASE 500ML - RECOMMENDED FOR SERVICING REAR SHOCKS & FORKS

SID RLC A1/ XX/RL B1-B2 (2017-2019)

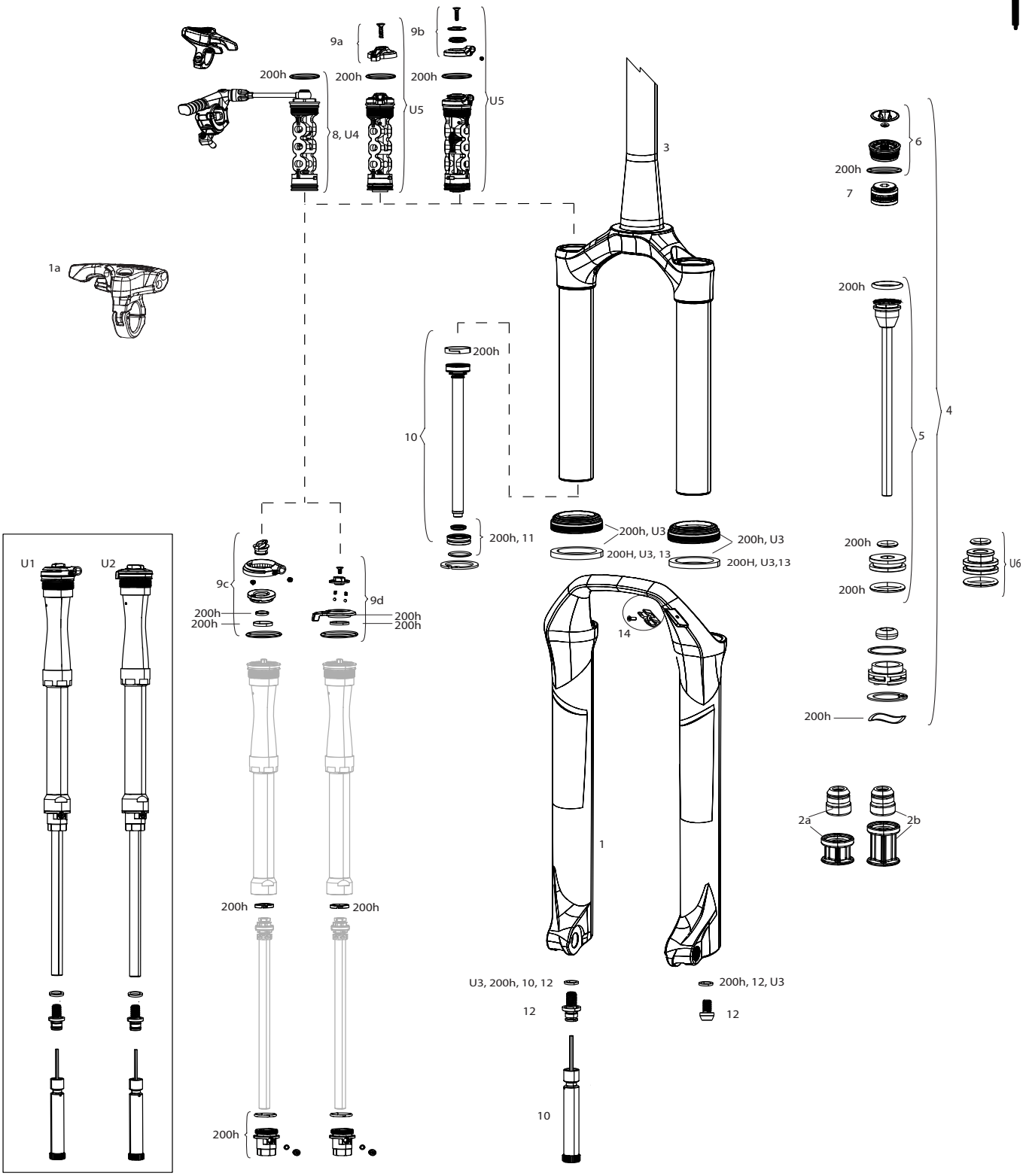

Note:

1. 2017-2019 SID models require exact oil and grease type called out on service kit label and in the service manual. See www.sram.com/service for more info.
2. 2017 SID models use a hour based service interval, see www.sram.com/service for more info.
3. Convert from Crown Adjust to Cable Remote Adjust: Remote compression damper, remote compression adjuster spool, cable clamp and remote lever assembly.
4. Solo Air internals require Solo Air CSU; Solo Air internals are not compatible with Dual Air CSU. Dual Air internals require Dual Air CSU; Dual Air internals are not compatible with Solo Air CSU.
5. SID chassis and internals may be travel-specific. See part kit descriptions for identification.
6. 120mm Air Spring is only compabible with 120mm chassis.
6. 2013+ XLoc remote uses Reverb hydraulic fluid. Use fluid indicated on fork top cap.
7. Decal and Maxle pages can be found in back of the catalog.

SID RLC A1/XX/RL B1-B2 (2017-2019)

	UPGRADE	
U1	00.4018.783.010	DAMPER UPGRADE KIT - CHARGER RLC,100 MAX TRAVEL, REMOTE (INCLUDES RIGHT SIDE INTERNALS & ONELOC REMOTE) - SID RLC (A1-B1/2017-2019)/SID RL,XX,WC(B1+/ 2017+)/REBA RL(A7+/2018+)
U2	00.4018.783.009	DAMPER UPGRADE KIT - CHARGER RLC,100 MAX TRAVEL, CROWN ADJUST (INCLUDES COMPLETE RIGHT SIDE INTERNALS) - SID RLC (A1-B1/2017-2019)/SID RL,XX,WC(B1+/ 2017+)/REBA RL(A7+/2018+)
U3	00.4318.045.002	FORK DUST WIPER UPGRADE KIT - 32MM BLACK FLANGED LOW FRICTION SEALS (INCLUDES DUST WIPERS, 5MM & 10MM FOAM RINGS) - SID/REVELATION/REBA/ARGLE/SEKTOR/TORA/RECON/XC32
U4	00.4318.004.002	REMOTE UPGRADE KIT - XLOC FULL SPRINT - INCLUDES MOTION CONTROL X DNA COMP DAMPER, REAR SHOCK HYDRAULIC HOSE, BLEED SYRINGES, RIGHT, MMX, BLACK - SIDB (2011-2016)
ns	00.4318.002.019	REMOTE UPGRADE KIT- ONELOC RIGHT/ABOVE, LEFT/BELOW 10MM MC RLT DAMPER PUSH TO LOCK (INCLUDES REMOTE, COMP DAMPER, CABLE& HOUSING) -SIDB/REBA/BLUTO(2012-2017)
U5	00.4318.004.001	REMOTE UPGRADE KIT - XLOC FULL SPRINT - INCLUDES MOTION CONTROL X DNA COMP DAMPER, REAR SHOCK HYDRAULIC HOSE, BLEED SYRINGES, LEFT, MMX, BLACK - SIDB (2011-2016)
ns	11.4018.098.000	FORK DAMPER ASSEMBLY - REMOTE 3 POSITION CHARGER REMOTE (INCLUDES REMOTE SPOOL & CABLE CLAMP) COMPATIBLE WITH SCOTT TWIN-LOCK REMOTE ONLY - SCOTT SID B1
U6	11.4018.096.001	FORK SPRING SEALHEAD - 32MM DEBONAIR RED (REPLACES FLOATING SEALHEAD, BASEPLATE & WAVE WASHER) SID RLC A1(2017-2019)/RL B1-B2(2017-2019)/B4(2020+)
	SERVICE	
200h	00.4318.025.060	200 HOUR/1 YEAR SERVICE KIT (INCLUDES DUST SEALS, FOAM RINGS, O-RING SEALS, CHARGER RL SEALHEAD) SID SELECT B4 (2020), SID SL SELECT C1 (2021)
200h	00.4318.025.070	200 HOUR/1 YEAR SERVICE KIT (INCLUDES DUST SEALS, FOAM RINGS, O-RING SEALS, CHARGER 2 RL SEALHEAD) -SID RL B2 80-100MM (2018+)/SELECT + B4 80-100MM (2020), SID SL SELECT+ C1 (2021)
200h	00.4318.025.080	200 HOUR/1 YEAR SERVICE KIT (INCLUDES DUST SEALS, FOAM RINGS, O-RING SEALS, CHARGER 2 RLC SEALHEAD) - SID RLC A1+ (2017-2019)/ULTIMATE B4 (2020)
200h	00.4315.032.613	200 HOUR/1 YEAR SERVICE KIT (INCLUDES DUST SEALS, FOAM RINGS, O-RING SEALS, DAMPER SEALHEAD) - SID XX/RL B1 (2017)
200h	00.4318.025.110	200 HOUR/1 YEAR SERVICE KIT (INCLUDES DUST SEALS, FOAM RINGS, O-RING SEALS, CHARGER 2 RL SEALHEAD) -SID RL B2 110-120MM (2018+)/SELECT + B4 110-120MM (2020)
	LOWER LEG	
1	11.4018.006.256	FORK LOWER LEG - (DECALS NOT INCLUDED) 29 15X100 BLACK - SID RLC A1/SID XX/RL B1 (2017+) REBA 80-100MM A7 (2018+)
1	11.4018.006.258	FORK LOWER LEG - (DECALS NOT INCLUDED) 29 15X100 DIFFUSION BLACK - SID RLC A1/SID XX/RL B1 (2017+) REBA 80-100MM A7 (2018+)
1	11.4018.006.261	FORK LOWER LEG - (DECALS NOT INCLUDED) 27 15X100 DIFFUSION BLACK - SID RLC A1/SID XX/RL B1 (2017+) REBA 80-100MM A7 (2018+)
1	11.4018.006.259	FORK LOWER LEG - (DECALS NOT INCLUDED) 27 15X100 BLACK - SID RLC A1/SID XX/RL B1 (2017+) REBA 80-100MM A7 (2018+)
	LOWER LEG BOOST	
1	11.4018.006.262	FORK LOWER LEG - (DECALS NOT INCLUDED) 29 15X110 BOOST™ BLACK - SID RLC A1/SID XX/RL B1 (2017+) REBA 80-100MM A7 (2018+) SID SELECT/SELECT+ B4 80-100MM (2020+)
1	11.4018.006.265	FORK LOWER LEG - (DECALS NOT INCLUDED) 27 15X110 BOOST™ BLACK - SID RLC A1/SID XX/RL B1 (2017+) REBA 80-100MM A7 (2018+) SID SELECT/SELECT+ B4 80-100MM (2020+)
1	11.4018.006.267	FORK LOWER LEG - (DECALS NOT INCLUDED) 27 15X110 BOOST™ DIFFUSION BLACK - SID RLC A1/SID XX/RL B1 (2017+) REBA A7 (2018+) SID SELECT/SELECT+ B4 80-100MM (2020+)
1	11.4018.006.231	FORK LOWER LEG - (DECALS NOT INCLUDED) 29 15X110 BOOST™ BLACK - SID A1-A4 (2011-2016),REBA (A1-A5/2012-2017), REBA A7 120MM (2018+) SID SELECT/SELECT+ 110-120MM B4 (2020+)
1	11.4018.006.233	FORK LOWER LEG - (DECALS NOT INCLUDED) 29 15X110 BOOST™ DIFFUSION BLACK - SID A1-A4 (2011-2016),REBA (A1-A5/2012-2017), REBA A7 (2018+) SID SELECT/SELECT+ 110-120MM B4 (2020+)
2a	11.4018.072.000	FORK LOWER LEG BUMP STOP - 29 - SID RLC A1/SID XX/RL B1 (2017+)/ SID B4 (2020)/SID SL C1 (2021)
2b	11.4018.072.001	FORK LOWER LEG BUMP STOP - 27 - SID RLC A1/SID XX/RL B1 (2017+)/ SID B4 (2020+)
	CSU	
3	11.4018.008.464	FORK CSU - SOLO AIR 27 42 OFF-SET ALUMINUM TAPER BLACK (NO GRADIENTS) - SID RLC A1/SID XX/RL B1 (2017+) REBA A7 80-100 MM (2018+)
3	11.4018.008.467	FORK CSU - SOLO AIR 29 46 OFF-SET ALUMINUM TAPER BLACK (NO GRADIENTS) - SID RLC A1/SID XX/RL B1 (2017+) REBA A7 80-100 MM (2018+)
3	11.4018.008.469	FORK CSU - SOLO AIR 29 46 OFF-SET ALUMINUM TAPER DIFFUSION BLACK (NO GRADIENTS) - SID RLC A1/SID XX/RL B1 (2017+) REBA A7 80-100MM (2018+)
3	11.4018.008.481	FORK CSU - SOLO AIR 2946 OFF-SET CARBON TAPER DIFFUSION BLACK (NO GRADIENTS) - SID RLC A1/SID XX/RL B1
3	11.4018.008.470	FORK CSU - SOLO AIR 29 51 OFF-SET ALUMINUM TAPER BLACK (NO GRADIENTS) - SID RLC A1/SID XX/RL B1 (2017+) REBA A7 80-100 MM (2018+)
3	11.4018.008.472	FORK CSU - SOLO AIR 29 51 OFF-SET ALUMINUM TAPER DIFFUSION BLACK (NO GRADIENTS) - SID RLC A1/SID XX/RL B1 (2017+) REBA A7 80-100MM (2018+)
3	11.4018.008.479	FORK CSU - SOLO AIR 2946 OFF-SET CARBON TAPER BLACK (NO GRADIENTS) - SID RLC A1/SID XX/RL B1
3	11.4018.008.482	FORK CSU - SOLO AIR 2951 OFF-SET CARBON TAPER BLACK (NO GRADIENTS) - SID RLC A1/SID XX/RL B1
3	11.4018.008.484	FORK CSU - SOLO AIR 2951 OFF-SET CARBON TAPER DIFFUSION BLACK (NO GRADIENTS) - SID RLC A1/SID XX/RL B1
3	11.4018.008.485	FORK CSU - SOLO AIR 2742 OFF-SET CARBON TAPER BLACK (NO GRADIENTS) - SID RLC A1/SID XX/RL B1
	CSU - BOOST	
3	11.4018.008.473	FORK CSU - SOLO AIR 27 BOOST™ 42 OFF-SET ALUMINUM TAPER BLACK (NO GRADIENTS) - SID RLCA1/SID XX/RL B1 (2017+) REBA A780-100MM (2018+)
3	11.4018.008.475	FORK CSU - SOLO AIR 27 BOOST™ 42 OFF-SET ALUMINUM TAPER DIFFUSION BLACK (NO GRADIENTS) SID RLC A1/SID XX/RL B1 (2017+) REBA A7 80-100MM (2018+)
3	11.4018.008.476	FORK CSU - SOLO AIR 2927+ BOOST™ 51 OFF-SET ALUMINUM TAPER BLACK (NO GRADIENTS) - SID RLC A1/SID XX/RL B1 (2017+) REBA A7 80-100MM (2018+)
3	11.4018.008.478	FORK CSU - SOLO AIR 2927+ BOOST™ 51 OFF-SET ALUMINUM TAPER DIFFUSION BLACK (NO GRADIENTS) - SID RLC A1/SID XX/RL B1 (2017+) REBA A7 80-100MM (2018+)
3	11.4018.008.586	FORK CSU - DEBONAIR/SOLO AIR 2927+ BOOST™ COMPATIBLE 51 OFF-SET CARBON TAPER BLACK (NO GRADIENTS) - SID WC/SID RLC A1/SID XX/RL B1(2017+)
3	11.4018.008.587	FORK CSU - DEBONAIR/SOLO AIR 2927+ BOOST™ COMPATIBLE 51 OFF-SET CARBON TAPER DIFFUSION BLACK (NO GRADIENTS) - SID WC/SID A1/SID XX/RL B1 (2017+)/ SID ULTIMATE CARBON B4 (2020+)
ns	11.4306.531.000	FORK COMPRESSION PLUG -EXPANDER CARBON STEERER - SID
ns	11.4018.008.525	FORK CSU - DEBONAIR/SOLO AIR 27 BOOST™ COMPATIBLE 42 OFF-SET CARBON TAPER BLACK (NO GRADIENTS) - SID WC/SID RLC A1/SID XX/RL B1 (2017+) SID ULTIMATE CARBON B4 (2020+)
ns	11.4018.008.525	FORK CSU - DEBONAIR/SOLO AIR 27 BOOST™ COMPATIBLE 42 OFF-SET CARBON TAPER BLACK (NO GRADIENTS) - SID WC/SID RLC A1/SID XX/RL B1 (2017+) SID ULTIMATE CARBON B4 (2020+)
	SPRING	
4	11.4018.010.205	FORK SPRING SOLO AIR ASSEMBLY - 100MM-29 (INCLUDES TOP CAP, AIR PISTON, SHAFT BOLT) - SID RLC A1/ SID XX/RL B1 (201 7+)/REBA A7 80-100MM (2018+)
4	11.4018.010.206	FORK SPRING SOLO AIR ASSEMBLY - 100MM-27.5 (INCLUDES TOP CAP, AIR PISTON, SHAFT BOLT) - SID RLC A1/ SID XX/RL B1 (201 7+)/REBA A7 80-100MM (2018+)
4	11.4018.010.207	FORK SPRING SOLO AIR ASSEMBLY - 80MM-29 (INCLUDES TOP CAP, AIR PISTON, SHAFT BOLT) - SID RLC A1/ SID XX/RL B1 (2017+)/REBA A7 80-100MM (2018+)
5	11.4018.026.021	FORK SPRING SOLO AIR SHAFT - 100MM-29 - SID RLC A1+, SID XX, RL B1+(2017+)/REBA A7+ 80-100MM (2018+)
5	11.4018.026.022	FORK SPRING SOLO AIR SHAFT - 100MM-27.5 - SID RLC A1+, SID XX, RL B1+(2017+)/REBA A7+ 80-100MM (2018+)
5	11.4018.026.023	FORK SPRING SOLO AIR SHAFT - 80MM-29 - SID RLC A1+, SID XX, RL B1+(2017+)/REBA A7+ 80-100MM (2018+)
6	11.4018.012.011	FORK SPRING AIR TOP CAP - 32MM SPLINE (INCLUDES TOP CAP, VALVE COVER, USES CASSETTE TOOL) - SID B1-B4 (2017-2020)/SID SL C1 (2021)/REBA A7 (2018+), REBA 26 (2020+)
6	11.4018.032.002	FORK SPRING AIR TOP CAP - 32MM SOLO AIR/DEBONAIR (INCLUDES 5 TOKENS, INTERNALLY THREADED AIR CAP) REBA/SID/REVELATION/RS-1/BLUTO/ARGYLE RCT
7	11.4018.032.003	FORK SPRING BOTTOMLESS TOKENS - SOLO AIR/DEBONAIR (QTY 5) - SID/REBA/REVELATION/RS-1/BLUTO/ARGYLE RCT SOLO AIR/35G

SID RLC A1/XX/RL B1-B2 (2017-2019)

	DAMPER	
8	11.4015.544.010	FORK COMPRESSION DAMPER - CROWN MOCO DNA (INCLUDES COMPRESSION KNOB, GATE KNOB & BOLT) - SID/REBA RL(120MM ONLY) A1-A3 2012-2016
8	11.4015.544.390	FORK COMPRESSION DAMPER - REMOTE 10MM (2013+ PUSHLOC, ONELOC, TWISTLOC) MOCO (INCLUDES SPOOL, CABLE CLAMP & SCREW) - SID RL B1
9a	11.4015.547.020	FORK COMPRESSION DAMPER KNOB KIT - CROWN MOCO DNA - SID A RL/ REVELATION RL A1-A3 (2012-2016)
9b	11.4015.547.170	FORK COMPRESSION DAMPER KNOB KIT - REMOTE 10MM (2013+ PUSHLOC, ONELOC, TWISTLOC) MOCO (INCLUDES SPOOL, CABLE CLAMP, SCREW) - SID RL B1 (2017-2018)
9c	11.4015.547.180	FORK COMPRESSION DAMPER KNOB KIT - CROWN CHARGER RLC (INCLUDES KNOB & SCREW) - SID RLC A1/ SID ULTIMATE B4 (2020+)
9d	11.4015.547.181	FORK COMPRESSION DAMPER KNOB KIT - REMOTE 10MM (2013+ PUSHLOC, ONELOC, TWISTLOC) CHARGER RLC (INCLUDES SPOOL, CABLE CLAMP, SCREW) - SID RLC B1/ SID ULTIMATE B4 (2020+)
1a	00.4318.002.009	REMOTE - ONELOC LEFT/ABOVE, RIGHT/BELOW 10MM, REMOTE ONLY (INCLUDES REMOTE, CABLE&HOUSING)-SID,REBA,REVELATION,BLUTO,SEKTOR,RECONGOLD(2013-2017)/JUDY
1a	00.4318.002.010	REMOTE - ONELOC RIGHT/ABOVE, LEFT/BELOW 10MM, REMOTE ONLY (INCLUDES REMOTE, CABLE&HOUSING)-SID,REBA,REVELATION,BLUTO,SEKTOR,RECONGOLD(2013-2017)/JUDY
10	11.4018.025.020	FORK REBOUND DAMPER - (INCLUDES SHAFT BOLT & SEALHEAD) - SID B1
ns	11.4015.353.080	FORK DAMPER SEALHEAD ASSEMBLY - MOCO 32MM 12.5 ALUMINUM SHAFT- SIDB (2014-PRESENT), REVELATION (2014-PRESENT), BLUTO RLT (2015-PRESENT), SID XX/RL B1 (2017+)
ns	11.4018.097.000	FORK COMPRESSION DAMPER - REMOTE REVERSE PULL (PULL CABLE TO OPEN) MOCO REMOTE (INCLUDES SPOOL & CABLE CLAMP) TREK SID B1/REBA A8
ns	11.4308.327.002	AIR VALVE KIT - SCHRADER CORE (QTY 2) - FORKS/SHOCKS/REVERB
12	11.4015.403.100	FORK SHAFT FASTENER KIT - (INCLUDES SHAFT BOLTS & CRUSH WASHERS) - YARI A1+ (2016+), LYRIK A1-A2 (2010-2016), SID B1-C1 (2021), REVELATION RC A1-A2 (2018-2020)
bulk	11.4015.259.000	FORK CRUSH WASHERS - 8MM (QTY 50)
13	11.4018.028.015	FORK FOAM RING KIT - 32MM X 4MM (QTY 20) - SID RLC A1/SID XX/RL B1 (2017+)/RECON BOOST RL C1/TK B1 (2020+)
14	11.4015.534.011	FORK HOSE CLAMP - SID RLC A1/SID XX/RL B1-B4 (2017-2020) REBA A7 80-100MM (2018+)
	TOOLS/GREASE/FLUIDS	
ns	00.4318.031.000	FORK LOWER LEG DUST SEAL INSTALLATION TOOL 32MM (FOR FLANGELESS AND FLANGED DUST SEALS)
ns	11.4315.011.030	ROCKSHOX BLEED KIT (XLOC/TOTEM) QTY 2 (INCLUDES TWO SYRINGESAND FITTINGS, ONE TORX TOOL)
ns	00.4315.023.010	HIGH-PRESSURE FORK/SHOCK PUMP (300 PSI MAX) ROCKSHOX
ns	00.4315.023.040	HIGH-PRESSURE FORK/SHOCK PUMP (300 PSI MAX) ROCKSHOX DIGITALGAUGE
ns	00.4315.022.010	REAR SHOCK SCHRADER VALVE REMOVAL TOOL ROCKSHOX
ns	00.4318.007.001	ROCKSHOX STANDARD BLEED KIT (INCLUDES 2 SYRINGES/FITTINGS, REVERB HYDRAULIC FLUID, 120ML BOTTLE NEW)
ns	00.4318.007.000	ROCKSHOX CHARGER DAMPER STANDARD BLEED KIT (INCLUDES 1 SYRINGE, CHARGER BLEED FITTING, SUSPENSION OIL 3W)
ns	11.4315.021.020	ROCKSHOX SUSPENSION OIL, 5WT, 120ML BOTTLE - FORK DAMPER
ns	11.4015.354.010	ROCKSHOX SUSPENSION OIL, 5WT, 1 LITER BOTTLE - FORK DAMPER
ns	11.4315.021.040	ROCKSHOX SUSPENSION OIL, 15WT, 120ML BOTTLE - LOWER LEGS
ns	11.4015.354.030	ROCKSHOX SUSPENSION OIL, 15WT, 1 LITER BOTTLE - LOWER LEGS
ns	00.4318.008.000	GREASE SRAM BUTTER 20ML SYRINGE, FRICTION REDUCING GREASE BYSLICKOLEUM - DOUBLE TIME HUB PAWLS, FORKS & REVERB SERVICE
ns	00.4318.008.001	GREASE SRAM BUTTER 1OZ CONTAINER, FRICTION REDUCING GREASE BY SLICKOLEUM - DOUBLE TIME HUB PAWLS, FORKS & REVERB SERVICE

SID B - 80mm-120mm A1-A4 (2011-2016)

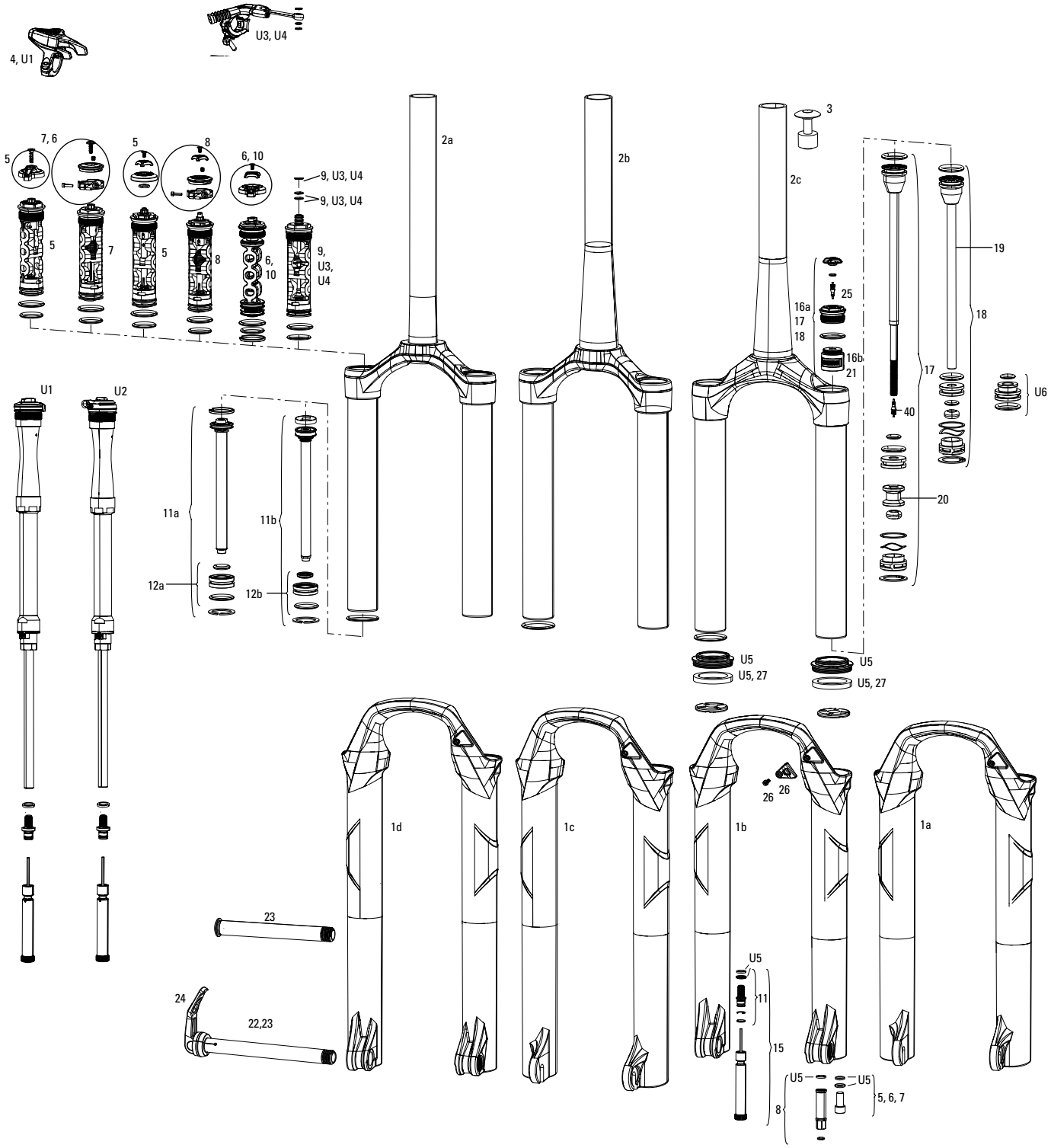

Note:

1. Full service kits include replaceable rebound damper seal head, o-rings, glide rings, retaining rings, crush washers, crush washer retainers, and shaft bolts/nuts. All air service kits include replacement schrader valve cores. Not all service parts are pictured. All basic service kits include the following replaceable wear items: o-rings, glide rings, dust seals, and foam rings.
2. Convert from Crown Adjust to Remote Adjust: Remote compression damper requires remote compression adjuster spool, cable clamp and remote lever assembly.
3. Solo Air internals require Solo Air CSU; Solo Air internals are not compatible with Dual Air CSU. Dual Air internals require Dual Air CSU; Dual Air internals are not compatible with Solo Air CSU.
4. 2013+ Reba and 2013+ SID B internals: CSU and Lower Leg assemblies are interchangeable. SID A: upper tube inner diameter = 27.8mm. SID B: upper tube inner diameter = 28.2mm.
5. SID chassis and internals may be travel-specific. See part kit descriptions for identification.
6. SID RCT3 A3 (2014+) compression damper must be used with SID A3 rebound damper (with Rapid Recovery valving). SID RCT3 A2 (2012-2013) compression damper is not compatible with SID RCT3 A3(2014+) rebound-damper.
7. 2011-2012 XLoc remote uses 2.5wt suspension fluid. 2013+ XLoc remote uses Reverb hydraulic fluid. Use fluid indicated on fork top cap.
8. SIDB1 100mm max travel has 80mm and 100mm gradients; SID B 120mm max travel has 80mm to 120mm gradients

SID B - 80mm-120mm A1-A4 (2011-2016)

	UPGRADE	
U1	00.4018.783.011	DAMPER UPGRADE KIT - CHARGER RLC,120 MAX TRAVEL, REMOTE (INCLUDES RIGHT SIDE INTERNALS & ONELOC REMOTE) - SID27/29(A2-A4/2012-2016),SID120(B1-B4/2020,REBA27/29(A1+/2012+)/BLUTOA1+
U2	00.4018.783.003	DAMPER UPGRADE KIT - CHARGER2 RLC CROWN 120MM MAX TRAVEL (INCLUDES COMPLETE RIGHT SIDE INTERNALS) - SID27/29(A2-A4/2012-2016),SID120(B1-B4/2020,REBA27/29(A1+/2012+)/BLUTOA1+
U3	00.4318.004.001	REMOTE UPGRADE KIT - XLOC FULL SPRINT - INCLUDES MOTION CONTROL X DNA COMP DAMPER, REAR SHOCK HYDRAULIC HOSE, BLEED SYRINGES, LEFT, MMX, BLACK - SIDB (2011-2016)
U4	00.4318.004.002	REMOTE UPGRADE KIT - XLOC FULL SPRINT - INCLUDES MOTION CONTROL X DNA COMP DAMPER, REAR SHOCK HYDRAULIC HOSE, BLEED SYRINGES, RIGHT, MMX, BLACK - SIDB (2011-2016)
U5	00.4318.045.002	FORK DUST WIPER UPGRADE KIT - 32MM BLACK FLANGED LOW FRICTION SEALS (INCLUDES DUST WIPERS, 5MM & 10MM FOAM RINGS) - SID/REVELATION/REBA/ARGLE/SEKTOR/TORA/RECON/XC32
U6	11.4018.096.002	FORK SPRING SEALHEAD - 32mm DEBONAIR BLACK (REPLACES FLOATING SEALHEAD, BASEPLATE & WAVE WASHER) SID A1-A4(2011-2016)/REBA A2+(2013+)/BLUTO A1+(2015+)
	SERVICE	
ns	11.4015.494.000	FORK SERVICE KIT - DUAL AIR (120MM) - SID
ns	11.4018.018.001	FORK SERVICE KIT - FULL SERVICE SOLO AIR (INCLUDES AIR SEALS, DAMPER SEALS & HARDWARE & BLACK SEALS) - SID/REBA A2-A3(2013-2016)
ns	00.4315.032.430	AM FORK SERVICE KIT, BASIC (INCLUDES DUST SEALS, FOAM RINGS,O-RING SEALS) - SID A3 (2014-2016)
ns	00.4315.032.080	AM FORK SERVICE KIT, BASIC (INCLUDES DUST SEALS, FOAM RINGS,O-RING SEALS) - REBA (2012-2014) AND SID (2012-2014)
ns	00.4315.032.612	AM FORK SERVICE KIT, BASIC (INCLUDES DUST SEALS, FOAM RINGS,O-RING SEALS) - SID 2927+B A3
	LOWER LEGS	
1a	11.4018.006.160	FORK LOWER LEG - (DECALS NOT INCLUDED) 26 9X100 QR BLACK - SID A1-A4 (2011-2016), REBA A1-A5(2012-2017)
1b	11.4018.006.168	FORK LOWER LEG - (DECALS NOT INCLUDED) 27 9X100 QR DIFFUSION BLACK - SID A1-A4 (2011-2016), REBA A1-A5(2012-2017)
1b	11.4018.006.169	FORK LOWER LEG - (DECALS NOT INCLUDED) 27 15X100 BLACK - SID A1-A4 (2011-2016), REBA A1-A5(2012-2017), REBA A7+ 120MM (2018+)
1c	11.4018.006.172	FORK LOWER LEG - (DECALS NOT INCLUDED) 29 9X100 QR BLACK - SID A1-A4 (2011-2016), REBA A1-A3 (2012-2017)
1c	11.4018.006.174	FORK LOWER LEG - (DECALS NOT INCLUDED) 29 9X100 QR DIFFUSION BLACK - SID A1-A4 (2011-2016), REBA A1-A5(2012-2017)
1d	11.4018.006.175	FORK LOWER LEG - (DECALS NOT INCLUDED) 29 15X100BLACK- SID A1-A4 (2011-2016), REBA A1-A3 (2012-2017), REBA A7+ 120MM (2018+)
1d	11.4018.006.177	FORK LOWER LEG - (DECALS NOT INCLUDED) 29 15X100 DIFFUSION BLACK - SID A1-A3 (2011-2017), REBA A1-A5(2012-2017), REBA A7+ 120MM (2018+)
1d	11.4018.006.231	FORK LOWER LEG - (DECALS NOT INCLUDED) 29 15X110 BOOST™ BLACK - SID A1-A4 (2011-2016),REBA (A1-A5/2012-2017), REBA A7 120MM (2018+) SID SELECT/SELECT+ 110-120MM B4 (2020+)
ns	11.4018.006.162	FORK LOWER LEG - (DECALS NOT INCLUDED) 26 9X100 QR DIFFUSION BLACK - SID A1-A4 (2011-2016), REBA A1-A5(2012-2017)
ns	11.4018.006.166	FORK LOWER LEG - (DECALS NOT INCLUDED) 27 9X100 QR BLACK - SID A1-A4 (2011-2016), REBA A1-A5(2012-2017)
ns	11.4018.006.233	FORK LOWER LEG - (DECALS NOT INCLUDED) 29 15X110 BOOST™ DIFFUSION BLACK - SID A1-A4 (2011-2016),REBA (A1-A5/2012-2017), REBA A7 (2018+) SID SELECT/SELECT+ 110-120MM B4 (2020+)
	CSU	
2b	11.4018.008.252	FORK CSU - SOLO AIR 27.5 ALUMINUM TAPER BLACK (WITH BLACK UPPER TUBES) - SID/REBA A2-A3 (2013-2016)
2b	11.4018.008.254	FORK CSU - SOLO AIR 27.5 ALUMINUM TAPER DIFFUSION BLACK (WITH BLACK UPPER TUBES) - SID/REBA A2-A3(2013-2016)
2a	11.4018.008.255	FORK CSU - SOLO AIR 29 46 OFF-SET ALUMINUM 11/8 BLACK (WITH BLACK UPPER TUBES) - SID/REBA A2-A3 (2013-2016)
2a	11.4018.008.257	FORK CSU - SOLO AIR 29 46 OFF-SET ALUMINUM 11/8 DIFFUSION BLACK (WITH BLACK UPPER TUBES)- SID/REBA A2-A3 (2013-2016)
2a	11.4018.008.260	FORK CSU - SOLO AIR 29 51 OFF-SET ALUMINUM 11/8 DIFFUSION BLACK (WITH BLACK UPPER TUBES) - SID/REBA A2-A3 (2013-2016)
2b	11.4018.008.261	FORK CSU - SOLO AIR 29 46 OFF-SET ALUMINUM TAPER BLACK (WITH BLACK UPPER TUBES) - SID/REBA A2-A3 (2013-2016)
2b	11.4018.008.263	FORK CSU - SOLO AIR 29 46 OFF-SET ALUMINUM TAPER DIFFUSION BLACK (WITH BLACK UPPER TUBES) - SID/REBA A2-A3 (2013-2016)
2c	11.4018.008.264	FORK CSU - SOLO AIR 29 46 OFF-SET CARBON TAPER BLACK (WITH BLACK UPPER TUBES) - SID/REBA A2-A3 (2013-2016)
2c	11.4018.008.265	FORK CSU - SOLO AIR 29 46 OFF-SET CARBON TAPER DIFFUSION BLACK (WITH BLACK UPPER TUBES) - SID/REBA A2-A3 (2013-2016)
2b	11.4018.008.266	FORK CSU - SOLO AIR 29 51 OFF-SET ALUMINUM TAPER BLACK (WITH BLACK UPPER TUBES) - SID/REBA A2-A3 (2013-2016)
2b	11.4018.008.268	FORK CSU - SOLO AIR 29 51 OFF-SET ALUMINUM TAPER DIFFUSION BLACK (WITH BLACK UPPER TUBES) - SID/REBA A2-A3 (2013-2016)
2c	11.4018.008.269	FORK CSU - SOLO AIR 29 51 OFF-SET CARBON TAPER BLACK (WITHBLACK UPPER TUBES) - SID/REBA A2-A3 (2013-2016)
ns	11.4018.008.244	FORK CSU - SOLO AIR 26 ALUMINUM 11/8 BLACK (WITH BLACK UPPER TUBES) - SID/REBA A2-A3 (2013-2016)
ns	11.4018.008.247	FORK CSU - SOLO AIR 26 ALUMINUM TAPER BLACK (WITH BLACK UPPER TUBES) - SID/REBA A2-A3 (2013-2016)
	CSU BOOST	
2c	11.4018.008.407	FORK CSU - SOLO AIR 29"/27.5"+ BOOST™ COMPATIBLE 15X110 51 OFF-SET ALUMINUM TAPER BLACK - SID/REBA
2c	11.4018.008.409	FORK CSU - SOLO AIR 29"/27.5"+ BOOST™ COMPATIBLE 15X110 51 OFF-SET ALUMINUM TAPER DIFFUSION BLACK - SID/REBA
3	11.4306.531.000	FORK COMPRESSION PLUG -EXPANDER CARBON STEERER - SID
	DAMPER	
4	00.4318.002.009	REMOTE - ONELOC LEFT/ABOVE, RIGHT/BELOW 10MM, REMOTE ONLY (INCLUDES REMOTE, CABLE&HOUSING)-SID,REBA,REVELATION,BLUTO,SEKTOR,RECONGOLD(2013-2017)/JUDY
4	00.4318.002.010	REMOTE - ONELOC RIGHT/ABOVE, LEFT/BELOW 10MM, REMOTE ONLY (INCLUDES REMOTE, CABLE&HOUSING)-SID,REBA,REVELATION,BLUTO,SEKTOR,RECONGOLD(2013-2017)/JUDY
5	11.4015.544.010	FORK COMPRESSION DAMPER - CROWN MOCO DNA (INCLUDES COMPRESSION KNOB, GATE KNOB & BOLT) - SID/REBA RL(120MM ONLY) A1-A3 2012-2016
5	11.4015.544.050	FORK COMPRESSION DAMPER - CROWN ADJUST MOCO DNA (INCLUDES COMPRESSION KNOB, GATE KNOB & BOLT) - SIDB/REBA RLT (120MM ONLY) A1A3 (2012-2016)
6	11.4015.544.070	FORK COMPRESSION DAMPER - CROWN MOCO RCT3 DNA (INCLUDES COMPRESSION KNOB, LOW SPEED KNOB & BOLT) - SIDB RCT3 (120MM CHASSIS ONLY) A1-A2 (2012-2013)
7	11.4015.544.020	FORK COMPRESSION DAMPER - REMOTE 17MM (POPLOC, PRE-2013 PUSHLOC) MOCO DNA (INCLUDES SPOOL & CABLE STOP CLAMP) - SIDB/REBA RL (120MM ONLY) A1-A3 (2012-2016)
7	11.4015.544.210	FORK COMPRESSION DAMPER - REMOTE 10MM (2013+ PUSHLOC, ONELOC, TWISTLOC) MOCO RL DNA, SILVER (INCLUDES SPOOL & CABLE CLAMP) - SIDB/REBA A2-A3 (2013-2016)
7	11.4015.544.230	FORK COMPRESSION DAMPER - REMOTE 10MM (2013+ PUSHLOC, ONELOC, TWISTLOC) MOCO RL DNA, BLACK (INCLUDES SPOOL & CABLE CLAMP) - SIDB/REBA A2-A3 (2013-2016)
8	11.4015.544.060	FORK COMPRESSION DAMPER - REMOTE 17MM (POPLOC, PRE-2013 PUSHLOC) MOCO DNA THRESHOLD (INCLUDES SPOOL, CABLE CLAMP & FLOODGATE KNOB) - SIDB/REBA RLT (120MM ONLY) A1-A3 (2012-2016)
8	11.4015.544.240	FORK COMPRESSION DAMPER - REMOTE 10MM (2013+ PUSHLOC, ONELOC, TWISTLOC) MOCO RTL DNA , BLACK (INCLUDES SPOOL & CABLE CLAMP) - SIDB/REBA A2-A3 (2013-2016)
9	11.4015.544.080	FORK COMPRESSION DAMPER - REMOTE MOCO XX DNA (INCLUDES BANJO RETAINING RING) - SID XX/XX WORLD CUP (120MM CHASSIS ONLY) A1-A3 (2012-2016)
10	11.4015.544.270	FORK COMPRESSION DAMPER - CROWN, MOCO DNA RCT3 (INCLUDES COMPRESSION KNOB, GATE KNOB & BOLT) - SID BLACK A3 2014-2016
11b	11.4018.025.002	FORK REBOUND DAMPER - (INCLUDES SHAFT BOLT & SEALHEAD) - SID 27.5/29 A3 (2014-2016)
12a	11.4015.353.010	FORK DAMPER SEALHEAD ASSEMBLY - MOCO 32MM - SIDA 2009-2014, SIDB 2011-2013, REBA 2009-PRESENT, REVELATION2009-2013, BLUTO RL 2015-PRESENT
12b	11.4015.353.080	FORK DAMPER SEALHEAD ASSEMBLY - MOCO 32MM 12.5 ALUMINUM SHAFT- SIDB (2014-PRESENT), REVELATION (2014-PRESENT), BLUTO RLT (2015-PRESENT), SID XX/RL B1 (2017+)
ns	11.4015.294.000	FORK COMPRESSION DAMPER KNOB KIT - CROWN MOCO (INCLUDES SET SCREW, EXTERNAL FLOODGATE ADJUSTER) - SID RLT (2009-2011)/REBA RLT (2011-2012)/REVELATION RLT (2011-2012)
13	11.4018.011.003	FORK COMPRESSION DAMPER KNOB KIT - REMOTE 10MM (2013+ PUSHLOC, ONELOC, TWISTLOC) RL - SID RL/REVELATION 2013-2016
15	11.4015.293.000	FORK REBOUND DAMPER KNOB KIT - (INCLUDES ADJUSTER KNOB & BOLT) - 2008-2016 SID/2012-2016 REBA

SID B - 80mm-120mm A1-A4 (2011-2016)

	SPRING	
16a	11.4018.012.006	FORK SPRING AIR TOP CAP - 32MM (ALUMINUM UPPER TUBES ONLY, BOTTOMLESS TOKEN COMPATIBLE) - REBA A1-A5/SIDA1-A4/REVELATION A1-A4/RS-1 A+/BLUTO A1+/ARGYLE A1+
16b	11.4018.032.002	FORK SPRING AIR TOP CAP - 32MM SOLO AIR/DEBONAIR (INCLUDES 5 TOKENS, INTERNALLY THREADED AIR CAP) REBA/SID/REVELATION/RS-1/BLUTO/ARGYLE RCT
17	11.4015.546.040	FORK SPRING DUAL AIR ASSEMBLY - 120MM (INCLUDES LEFT SIDE INTERNALS) (120MM CHASSIS ONLY) - 2012 REBA/SIDB 26"
17	11.4015.546.050	FORK SPRING DUAL AIR ASSEMBLY - 100MM (INCLUDES LEFT SIDE INTERNALS) (120MM CHASSIS ONLY) - 2012 REBA/SIDB 29"
18	11.4018.010.046	FORK SPRING SOLO AIR ASSEMBLY - 120MM-27.5/29 BLACK (INCLUDES TOP CAP, AIR PISTON, SHAFT BOLT) - REBA A2-A6/SIDB A2-A4
18	11.4018.010.119	FORK SPRING SOLO AIR ASSEMBLY - 110MM-29 (INCLUDES TOP CAP, 1 BOTTOMLESS TOKEN, AIR PISTON, SHAFT BOLT) - REBA A1-A5(2012- 2017)/SID A1-A4 (2011- 2016)
18	11.4018.010.120	FORK SPRING SOLO AIR ASSEMBLY - 100MM-27.5/29 (INCLUDES TOP CAP, 2 BOTTOMLESS TOKENS, SOLO AIR SPRING, SHAFT BOLT) - REBA A1-A5(2012- 2017)/SID A1-A4 (2011- 2016)
18	11.4018.010.121	FORK SPRING SOLO AIR ASSEMBLY - 95MM-29 (INCLUDES TOP CAP, 2 BOTTOMLESS TOKENS, AIR PISTON, SHAFT BOLT) - REBA A1-A5(2012- 2017)/SID A1-A4 (2011- 2016)
18	11.4018.010.122	FORK SPRING SOLO AIR ASSEMBLY - 90MM-29 (INCLUDES TOP CAP, 3 BOTTOMLESS TOKENS, AIR PISTON, SHAFT BOLT) - REBA A1-A5(2012- 2017)/SID A1-A4 (2011- 2016)
18	11.4018.010.056	FORK SPRING SOLO AIR ASSEMBLY - 120MM-26 (INCLUDES TOP CAP, AIR PISTON, SHAFT BOLT) - REBA A2-A6/SIDB A2-A4
18	11.4018.010.125	FORK SPRING SOLO AIR ASSEMBLY - 100MM-26 (INCLUDES TOP CAP, 2 BOTTOMLESS TOKENS, AIR PISTON, SHAFT BOLT) - REBA A1-A5(2012- 2017)/SID A1-A4 (2011- 2016)
19	11.4018.021.000	FORK SPRING SOLO AIR SHAFT - 120MM-27.5"/(29"A3+) NOT COMPATIBLE WITH PRE 2014/A3 29" (INCLUDES AIR SHAFT, PISTON & SEAL) - SIDB A2-A4(2013-2016)/REBA A3-A7(2013-2017)
19	11.4018.021.001	FORK SPRING SOLO AIR SHAFT - 110MM-27.5"/29" (INCLUDES AIR SHAFT, PISTON & SEAL) - SIDB A2-A4(2013-2016)/REBA A3-A7(2013-2017)
19	11.4018.021.002	FORK SPRING SOLO AIR SHAFT - 100MM-27.5"/29" (INCLUDES AIR SHAFT, PISTON & SEAL) - SIDB A2-A4(2013-2016)/REBA A3-A7(2013-2017)
19	11.4018.021.003	FORK SPRING SOLO AIR SHAFT - 90MM-27.5"/29" (INCLUDES AIR SHAFT, PISTON & SEAL) - SIDB A2-A4(2013-2016)/REBA A3-A7(2013-2017)
19	11.4018.021.004	FORK SPRING SOLO AIR SHAFT - 80MM-27.5"/29" (INCLUDES AIR SHAFT, PISTON & SEAL) - SIDB A2-A4(2013-2016)/REBA A3-A7(2013-2017)
19	11.4018.021.005	FORK SPRING SOLO AIR SHAFT - 120MM-26"/RS-1 (INCLUDES AIR SHAFT, PISTON & SEAL) - SIDB A2-A4(26")/REBA A3-A7(26")/RS-1
19	11.4018.021.006	FORK SPRING SOLO AIR SHAFT - 110MM-26"/RS-1 (INCLUDES AIR SHAFT, PISTON & SEAL) - SIDB A2-A4(26")/REBA A3-A7(26")/RS-1
19	11.4018.021.007	FORK SPRING SOLO AIR SHAFT - 100MM-26"/RS-1 (INCLUDES AIR SHAFT, PISTON & SEAL) - SIDB A2-A4(26")/REBA A3-A7(26")/RS-1
19	11.4018.021.009	FORK SPRING SOLO AIR SHAFT - 80MM-26"/RS-1 (INCLUDES AIR SHAFT, PISTON & SEAL) - SIDB A2-A4(26")/REBA A3-A7(26")/RS-1
20	11.4015.450.000	FORK SPRING TRAVEL SPACERS - ALL TRAVEL SPACER KIT (NOT COMPATIBLE WITH SID/REBA/REVELATION SOLO AIR SPRING)
21	11.4018.032.003	FORK SPRING BOTTOMLESS TOKENS - SOLO AIR/DEBONAIR (QTY 5) - SID/REBA/REVELATION/RS-1/BLUTO/ARGYLE RCT SOLO AIR/35G
22	00.4318.005.002	AXLE MAXLE LITE FRONT, 15X100, LENGTH 148MM, THREAD LENGTH 9MM, THREAD PITCH M15X1.50 - REBA/REVELATION/RECON/SEKTOR/XC32/SID/SID SL/SID 35MM
22	00.4318.005.004	AXLE MAXLE LITE FRONT, 15X110, LENGTH 158MM, THREAD LENGTH 9MM, THREAD PITCH M15X1.50 BOOST COMPATIBLE - SID/REBA
23	00.4318.005.018	AXLE MAXLE STEALTH FRONT, 15X100, LENGTH 148MM, THREAD LENGTH 9MM, THREAD PITCH M15X1.50 (NOT COMPATIBLE WITH RS-1) - 15X100, SID SL, SID 35MM
23	00.4318.005.019	AXLE MAXLE STEALTH FRONT, 15X110, LENGTH 158MM, THREAD LENGTH 9MM, THREAD PITCH M15X1.50 - BOOST COMPATIBLE
24	11.4318.004.001	AXLE MAXLE - LITE 15MM XC LEVER ASSEMBLY
	SPARES	
25	11.4308.327.002	AIR VALVE KIT - SCHRADER CORE (QTY 2) - FORKS/SHOCKS/REVERB
26	11.4015.534.010	FORK HOSE CLAMP - PIKE/LYRIK/YARI/SID/REVELATION/BOXXER/XC30/30G/30S/RECON/SEKTOR/BLUTO/REBA/35G/35S
bulk	11.4015.259.000	FORK CRUSH WASHERS - 8MM (QTY 50)
bulk	11.4015.260.000	FORK CRUSH WASHER RETAINER - 8MM (QTY 50)
27	11.4015.496.010	FORK FOAM RING KIT - 32MM X 5MM (QTY 20) - SID A1-A3 /REBA A2-A3/BLUTO A1/SID SL C1 (2021)
	TOOLS/GREASE/FLUIDS	
ns	00.4318.031.000	FORK LOWER LEG DUST SEAL INSTALLATION TOOL 32MM (FOR FLANGELESS AND FLANGED DUST SEALS)
ns	11.4315.011.030	ROCKSHOX BLEED KIT (XLOC/TOTEM) QTY 2 (INCLUDES TWO SYRINGESAND FITTINGS, ONE TORX TOOL)
ns	00.4315.023.010	HIGH-PRESSURE FORK/SHOCK PUMP (300 PSI MAX) ROCKSHOX
ns	00.4315.023.040	HIGH-PRESSURE FORK/SHOCK PUMP (300 PSI MAX) ROCKSHOX DIGITALGAUGE
ns	00.4315.022.010	REAR SHOCK SCHRADER VALVE REMOVAL TOOL ROCKSHOX
ns	00.4318.007.001	ROCKSHOX STANDARD BLEED KIT (INCLUDES 2 SYRINGES/FITTINGS, REVERB HYDRAULIC FLUID, 120ML BOTTLE NEW)
ns	11.4315.021.020	ROCKSHOX SUSPENSION OIL, 5WT, 120ML BOTTLE - FORK DAMPER
ns	11.4015.354.010	ROCKSHOX SUSPENSION OIL, 5WT, 1 LITER BOTTLE - FORK DAMPER
ns	11.4315.021.040	ROCKSHOX SUSPENSION OIL, 15WT, 120ML BOTTLE - LOWER LEGS
ns	11.4015.354.030	ROCKSHOX SUSPENSION OIL, 15WT, 1 LITER BOTTLE - LOWER LEGS
ns	00.4318.008.000	GREASE SRAM BUTTER 20ML SYRINGE, FRICTION REDUCING GREASE BYSLICKOLEUM - DOUBLE TIME HUB PAWLS, FORKS & REVERB SERVICE
ns	00.4318.008.001	GREASE SRAM BUTTER 1OZ CONTAINER, FRICTION REDUCING GREASE BY SLICKOLEUM - DOUBLE TIME HUB PAWLS, FORKS & REVERB SERVICE

SID A - Dual Air 80mm/100mm (2008-2014)

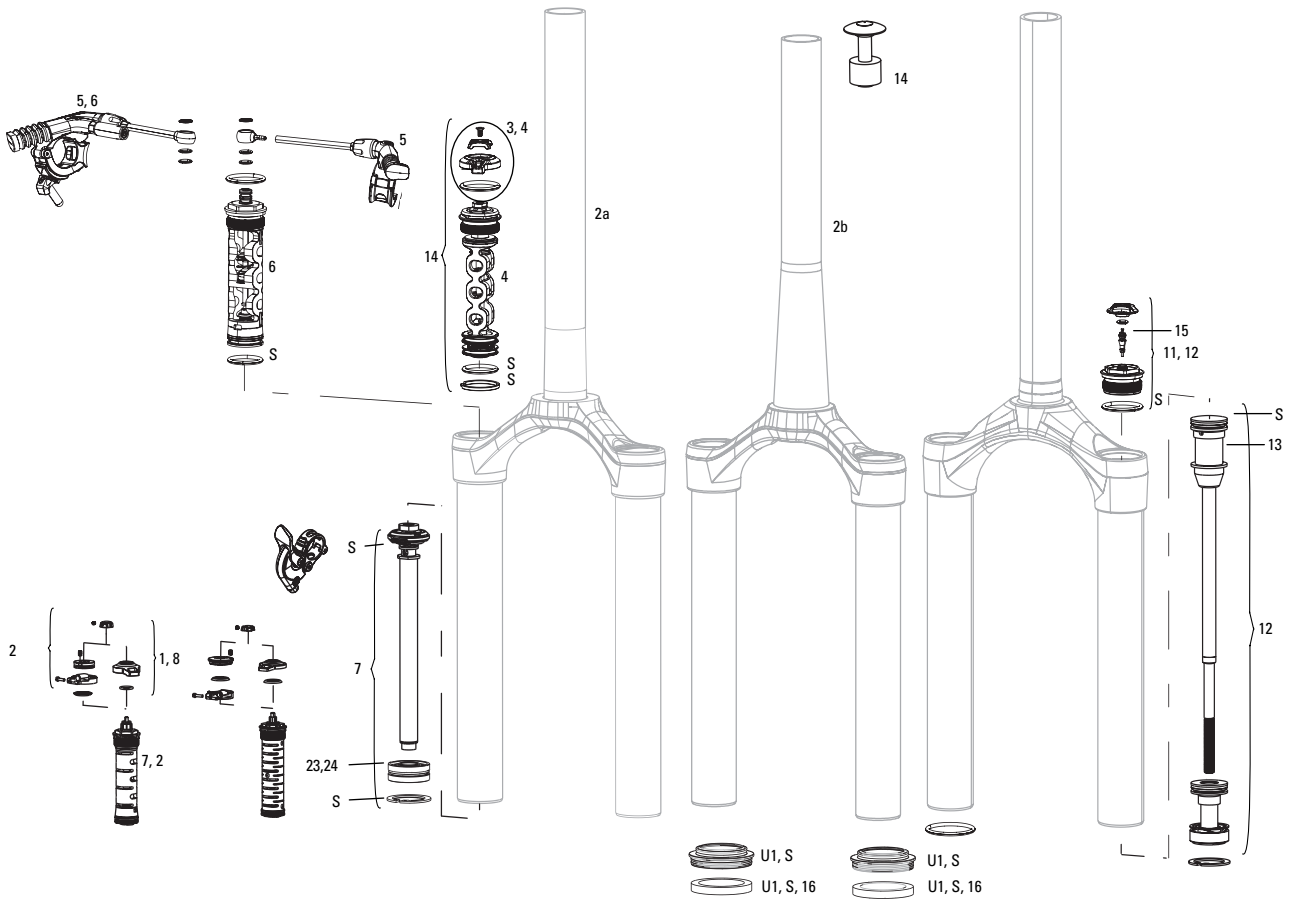

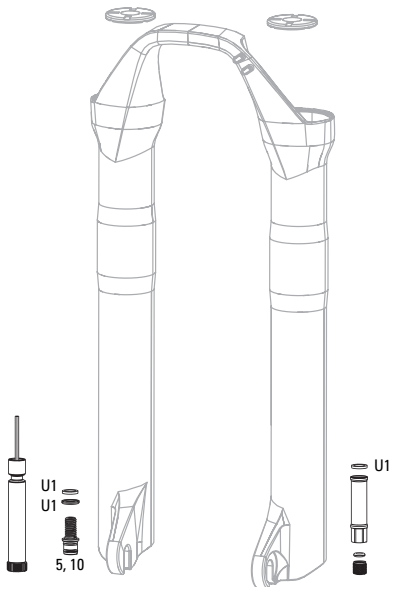

Note:

1. Full service kits include replaceable o-rings, glide rings, retaining rings, crush washers, crush washer retainers and shaft bolts/nuts. All air service kits include replacement schrader valve cores. Not all service parts are pictured. All basic service kits include the following replaceable wear items: o-rings, glide rings, dust seals, and foam rings.
2. Rebound damper and spring shaft kits include crush washers, crush washer retainers and shaft bolts, as well as upper tube retaining rings and rebound adjuster knob.
3. Solo Air internals, Solo Air CSU and SID B lower legs are NOT compatible with SID A. Use only Dual Air internals, Dual Air CSU and SID A lower legs.
4. 2013-2014 SID WC and XXWC 1 1/8" feature Dual Air and are not compatible with Solo Air.
5. SID A: upper tube inner diameter = 27.8mm. SID B: upper tube inner diameter = 28.2mm
6. Maximum fork travel = 100mm. Upper tube gradient includes ONLY 100mm and 80mm.
   - Internals and chassis parts designed for SIDB (120mm max travel) are NOT compatible.
   - Please note kit description travel specifications before ordering.
7. Decal and Maxle pages can be found in back of the catalog.

SID A - Dual Air 80mm/100mm (2008-2014)

	UPGRADES	
U1	00.4318.045.002	FORK DUST WIPER UPGRADE KIT - 32MM BLACK FLANGED LOW FRICTION SEALS (INCLUDES DUST WIPERS, 5MM & 10MM FOAM RINGS) - SID/REVELATION/REBA/ARGLE/SEKTOR/TORA/RECON/XC32
	SERVICE	
S	11.4015.300.000	FORK SERVICE KIT - 08-15 SIDA (80/100MM CHASSIS ONLY)
S	00.4315.032.080	AM FORK SERVICE KIT, BASIC (INCLUDES DUST SEALS, FOAM RINGS,O-RING SEALS) - REBA (2012-2014) AND SID (2012-2014)
	DAMPER	
1	11.4015.296.000	FORK COMPRESSION DAMPER - CROWN MOCO (INCLUDES COMPRESSION KNOB, GATE KNOB & BOLT) - 08-11 SID RACE/RLT (80/100MM ONLY)
2	11.4015.296.010	FORK COMPRESSION DAMPER - REMOTE 17MM (POPLOC, PRE-2013 PUSHLOC) MOCO (INCLUDES SPOOL, CABLE CLAMP, GATE KNOB, SCREW) 08-11 SIDA RACE/RLT (80/100MM ONLY)
3	11.4015.547.100	FORK COMPRESSION DAMPER KNOB KIT - CROWN CHARGER RCT3 (INCLUDES KNOB & SCREW) - SID A/REVELATION A1-A3, BLUTO A1 (2012-2016)
4	11.4015.544.030	FORK COMPRESSION DAMPER - CROWN MOCO RCT3 DNA (INCLUDES COMPRESSION KNOB, GATE KNOB & BOLT) - SIDA (80/1 00MM CHASSIS ONLY) 2009-2012
5	11.4315.013.050	REMOTE - XLOC SPRINT LEFT GOLD ADJUSTER (INCLUDES HOSE/BANJO) - SID/REVELATION
5	11.4315.013.060	REMOTE - XLOC SPRINT RIGHT GOLD ADJUSTER (INCLUDES HOSE/BANJO) - SID/REVELATION
6	11.4315.013.070	REMOTE - XLOC FULL SPRINT LEFT GOLD ADJUSTER (INCLUDES HOSE/BANJO) - SID/REVELATION/MONARCH XX
6	11.4315.013.080	REMOTE - XLOC FULL SPRINT RIGHT GOLD ADJUSTER (INCLUDES HOSE/BANJO) - SID/REVELATION/MONARCH XX
ns	11.4315.011.030	ROCKSHOX BLEED KIT (XLOC/TOTEM) QTY 2 (INCLUDES TWO SYRINGESAND FITTINGS, ONE TORX TOOL)
7	11.4015.353.080	FORK DAMPER SEALHEAD ASSEMBLY - MOCO 32MM 12.5 ALUMINUM SHAFT- SIDB (2014-PRESENT), REVELATION (2014-PRESENT), BLUTO RLT (2015-PRESENT), SID XX/RL B1 (2017+)
8	11.4015.294.000	FORK COMPRESSION DAMPER KNOB KIT - CROWN MOCO (INCLUDES SET SCREW, EXTERNAL FLOODGATE ADJUSTER) - SID RLT (2009-2011)/REBA RLT (2011-2012)/REVELATION RLT (2011-2012)
10	11.4015.293.000	FORK REBOUND DAMPER KNOB KIT - (INCLUDES ADJUSTER KNOB & BOLT) - 2008-2016 SID/2012-2016 REBA
	SPRING	
11	11.4018.012.006	FORK SPRING AIR TOP CAP - 32MM (ALUMINUM UPPER TUBES ONLY, BOTTOMLESS TOKEN COMPATIBLE) - REBA A1-A5/SIDA1-A4/REVELATION A1-A4/RS-1 A+/BLUTO A1+/ARGYLE A1+
12	11.4015.546.030	FORK SPRING DUAL AIR ASSEMBLY - 80-100MM (INCLUDES LEFT SIDE INTERNALS) (NOT COMPATIBLE WITH 2013 SOLO AIR CSU)- 2012 SIDA 26"
13	11.4015.450.000	FORK SPRING TRAVEL SPACERS - ALL TRAVEL SPACER KIT (NOT COMPATIBLE WITH SID/REBA/REVELATION SOLO AIR SPRING)
ns	11.4018.096.002	FORK SPRING SEALHEAD - 32MM DEBONAIR BLACK (REPLACES FLOATING SEALHEAD, BASEPLATE & WAVE WASHER) SID A1-A4(2011-2016)/REBA A2+(2013+)/BLUTO A1+(2015+)
	SPARES	
14	11.4306.531.000	FORK COMPRESSION PLUG -EXPANDER CARBON STEERER - SID
ns	11.4307.469.000	FORK BRAKE POST KIT - STEEL (QTY 2)
15	11.4308.327.002	AIR VALVE KIT - SCHRADER CORE (QTY 2) - FORKS/SHOCKS/REVERB
bulk	11.4015.259.000	FORK CRUSH WASHERS - 8MM (QTY 50)
bulk	11.4015.260.000	FORK CRUSH WASHER RETAINER - 8MM (QTY 50)
16	11.4015.496.010	FORK FOAM RING KIT - 32MM X 5MM (QTY 20) - SID A1-A3 /REBA A2-A3/BLUTO A1/SID SL C1 (2021)
ns	11.4015.490.010	FORK BUSHING KIT - 32MM UPPER 32X15MM, LOWER 32X25MM - SID (2011-2012)
ns	11.4018.008.244	FORK CSU - SOLO AIR 26 ALUMINUM 11/8 BLACK (WITH BLACK UPPER TUBES) - SID/REBA A2-A3 (2013-2016)
ns	11.4018.008.247	FORK CSU - SOLO AIR 26 ALUMINUM TAPER BLACK (WITH BLACK UPPER TUBES) - SID/REBA A2-A3 (2013-2016)
	TOOLS/GREASE/FLUIDS	
ns	00.4318.031.000	FORK LOWER LEG DUST SEAL INSTALLATION TOOL 32MM (FOR FLANGELESS AND FLANGED DUST SEALS)
ns	00.4315.023.010	HIGH-PRESSURE FORK/SHOCK PUMP (300 PSI MAX) ROCKSHOX
ns	00.4315.023.040	HIGH-PRESSURE FORK/SHOCK PUMP (300 PSI MAX) ROCKSHOX DIGITALGAUGE
ns	00.4315.022.010	REAR SHOCK SCHRADER VALVE REMOVAL TOOL ROCKSHOX
ns	00.4318.007.001	ROCKSHOX STANDARD BLEED KIT (INCLUDES 2 SYRINGES/FITTINGS, REVERB HYDRAULIC FLUID, 120ML BOTTLE NEW)
ns	11.4315.021.020	ROCKSHOX SUSPENSION OIL, 5WT, 120ML BOTTLE - FORK DAMPER
ns	11.4015.354.010	ROCKSHOX SUSPENSION OIL, 5WT, 1 LITER BOTTLE - FORK DAMPER
ns	11.4315.021.040	ROCKSHOX SUSPENSION OIL, 15WT, 120ML BOTTLE - LOWER LEGS
ns	11.4015.354.030	ROCKSHOX SUSPENSION OIL, 15WT, 1 LITER BOTTLE - LOWER LEGS
ns	00.4318.008.000	GREASE SRAM BUTTER 20ML SYRINGE, FRICTION REDUCING GREASE BYSLICKOLEUM - DOUBLE TIME HUB PAWLS, FORKS & REVERB SERVICE
ns	00.4318.008.001	GREASE SRAM BUTTER 1OZ CONTAINER, FRICTION REDUCING GREASE BY SLICKOLEUM - DOUBLE TIME HUB PAWLS, FORKS & REVERB SERVICE

RS-1 RLC A1/ RL A1 (2018-2019)

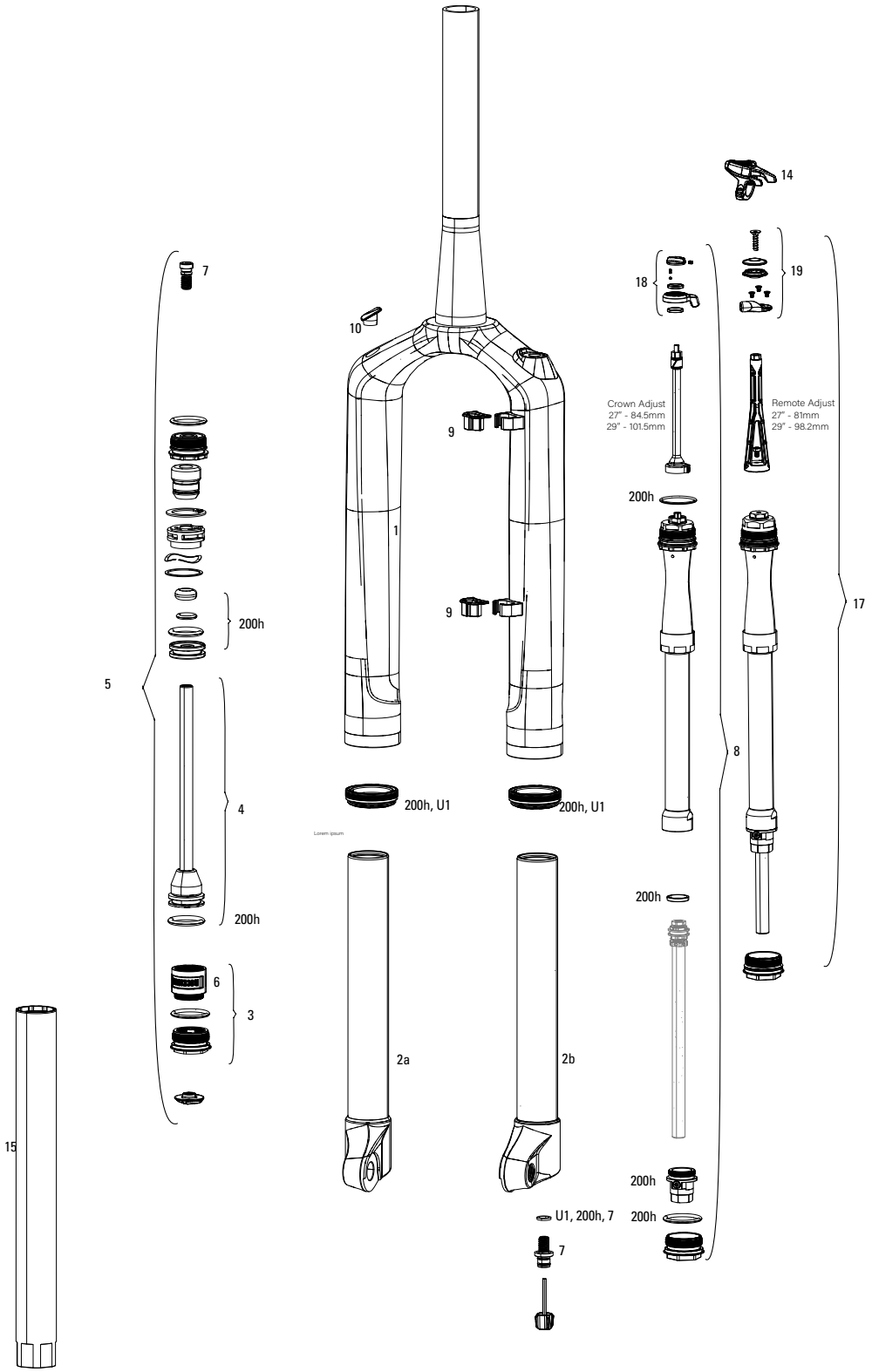

Note:

1. RS1 Charger is available in a Remote RL and a Crown RLC versions. The Remote is only RL, and the Crown is only RLC.
2. The RS1 Charger 2 REQUIRES a new bottom cap which is different than all previous bottom caps found on the RS1
3. The RS1 Charger 2 Remote RL REQUIRES the knob base on the CFU to have 3 tapped screw holes; RS1 Charger Remote RL CANNOT be installed into an older generation CFU with a knob base.
4. RLC/RL Charger and CFU not compatible with ACS/AC RS-1
5. Decal and Maxle pages can be found in back of the catalog.
6. Inner tubes must be replaced as a pair for correct wheel alignment.

RS-1 RLC A1/ RL A1 (2018-2019)

	UPGRADES	
U1	00.4318.045.003	FORK DUST WIPER UPGRADE KIT - 32MM BLACK FLANGELESS ULTRA-LOW FRICTION SKF SEALS (INCLUDES DUST WIPERS & 4MM FOAM RINGS) - BLUTO/RS-1/SID B1 (2017+)/32MM BOOST™ FORKS
ns	11.4018.096.002	FORK SPRING SEALHEAD - 32mm DEBONAIR BLACK (REPLACES FLOATING SEALHEAD, BASEPLATE & WAVE WASHER) SID A1-A4(2011-2016)/REBA A2+(2013+)/BLUTO A1+(2015+)
	SERVICE/UPGRADE	
200h	00.4315.032.641	200 HOUR/1 YEAR SERVICE KIT (INCLUDES DUST SEALS, FOAM RINGS, O-RING SEALS, CHARGER 2 SEALHEAD, SA SEALHEAD) - RS1 RLC/RL A1 (2018+)
	CFU	
1	11.4018.008.572	FORK CFU - SOLO AIR 29 CHARGER 2 TAPER BLACK - RS-1 RLC A1/RL A1 (2018+)
1	11.4018.008.574	FORK CFU - SOLO AIR 29 CHARGER 2 TAPER DIFFUSION BLACK - RS-1 RLC A1/RL A1 (2018+)
1	11.4018.008.575	FORK CFU - SOLO AIR 27 CHARGER 2 TAPER BLACK - RS-1 RLC A1 /RL A1 (2018+)
	INNER TUBES	
2a	11.4018.042.010	FORK LOWER LEG - (DECALS NOT INCLUDED) INNER TUBE STANCHION RIGHT SIDE BLACK - RS-1 A1+ (2015+)
2b	11.4018.042.020	FORK LOWER LEG - (DECALS NOT INCLUDED) INNER TUBE STANCHION LEFT SIDE BLACK - RS-1 A1+ (2015+)
2a	11.4018.042.030	FORK LOWER LEG - (DECALS NOT INCLUDED) INNER TUBE STANCHION RIGHT SIDE DIFFUSION BLACK - RS-1 A1+ (2015+)
2b	11.4018.042.040	FORK LOWER LEG - (DECALS NOT INCLUDED) INNER TUBE STANCHION LEFT SIDE DIFFUSION BLACK - RS-1 A1+ (2015+)
	SPRING INTERNALS	
3	11.4018.012.006	FORK SPRING AIR TOP CAP - 32MM (ALUMINUM UPPER TUBES ONLY, BOTTOMLESS TOKEN COMPATIBLE) - REBA A1-A5/SIDA1-A4/REVELATION A1-A4/RS-1 A+/BLUTO A1+/ARGYLE A1+
3	11.4018.032.002	FORK SPRING AIR TOP CAP - 32MM SOLO AIR/DEBONAIR (INCLUDES 5 TOKENS, INTERNALLY THREADED AIR CAP) REBA/SID/REVELATION/RS-1/BLUTO/ARGYLE RCT
4	11.4018.021.012	FORK SPRING SOLO AIR SHAFT - 130mm-27" (INCLUDES AIR SHAFT, PISTON & SEAL) 130mm-CHASSIS ONLY- RS-1
4	11.4018.021.005	FORK SPRING SOLO AIR SHAFT - 120MM-26"/RS-1 (INCLUDES AIR SHAFT, PISTON & SEAL) - SIDB A2-A4(26")/REBA A3-A7(26")/RS-1
4	11.4018.021.006	FORK SPRING SOLO AIR SHAFT - 110MM-26"/RS-1 (INCLUDES AIR SHAFT, PISTON & SEAL) - SIDB A2-A4(26")/REBA A3-A7(26")/RS-1
4	11.4018.021.007	FORK SPRING SOLO AIR SHAFT - 100MM-26"/RS-1 (INCLUDES AIR SHAFT, PISTON & SEAL) - SIDB A2-A4(26")/REBA A3-A7(26")/RS-1
4	11.4018.021.009	FORK SPRING SOLO AIR SHAFT - 80MM-26"/RS-1 (INCLUDES AIR SHAFT, PISTON & SEAL) - SIDB A2-A4(26")/REBA A3-A7(26")/RS-1
5	11.4018.010.251	FORK SPRING SOLO AIR ASSEMBLY - 100MM-27.5/29 (INCLUDES TOP CAP, AIR PISTON, SHAFT BOLT) - RS-1 RLC/RL A1-B1 (2018+)
5	11.4018.010.252	FORK SPRING SOLO AIR ASSEMBLY - 120MM-27.5/29 (INCLUDES TOP CAP, AIR PISTON, SHAFT BOLT) - RS-1 RLC/RL A1-B1 (2018+)
5	11.4018.010.253	FORK SPRING SOLO AIR ASSEMBLY - 100MM-29+ (INCLUDES TOP CAP, AIR PISTON, SHAFT BOLT) - RS-1 RLC/RL A1-B1 (2018+)
5	11.4018.010.254	FORK SPRING SOLO AIR ASSEMBLY - 130MM27.5 (INCLUDES TOP CAP, AIR PISTON, SHAFT BOLT) - RS-1 RLC/RL A1 (2018+)
6	11.4018.032.003	FORK SPRING BOTTOMLESS TOKENS - SOLO AIR/DEBONAIR (QTY 5) - SID/REBA/REVELATION/RS-1/BLUTO/ARGYLE RCT SOLO AIR/35G
8	11.4018.101.000	FORK DAMPER ASSEMBLY - CROWN CHARGER2 RLC 27.5"/29" (INCLUDES COMPLETE DAMPER INTERNALS FOR 27.5" & 29") - RS-1 A1 (2018+)
17	11.4018.101.001	FORK DAMPER ASSEMBLY - REMOTE CHARGER2 RLC 27.5"/29" (INCLUDES COMPLETE DAMPER INTERNALS FOR 27.5" & 29") - RS-1 A1 (2018+)
	SPARES	
7	11.4015.403.060	FORK SHAFT FASTENER KIT - (INCLUDES SHAFT BOLTS & CRUSH WASHERS) - RS-1
9	11.4018.046.000	FORK CFU CABLE GUIDE CLIPS - CSU (QTY 2) - RS-1
10	11.4018.047.000	FORK CFU COVER KIT - (INCLUDES AIR SIDE & DAMPER SIDE COVER) - RS-1
14	00.4318.002.009	REMOTE - ONELOC LEFT/ABOVE, RIGHT/BELOW 10MM, REMOTE ONLY (INCLUDES REMOTE, CABLE&HOUSING)-SID,REBA,REVELATION,BLUTO,SEKTOR,RECONGOLD(2013-2017)/JUDY
14	00.4318.002.010	REMOTE - ONELOC RIGHT/ABOVE, LEFT/BELOW 10MM, REMOTE ONLY (INCLUDES REMOTE, CABLE&HOUSING)-SID,REBA,REVELATION,BLUTO,SEKTOR,RECONGOLD(2013-2017)/JUDY
ns	11.4015.404.029	FORK REBOUND DAMPER KNOB KIT - (INCLUDES ADJUSTER KNOB & BOLT) - RS-1 RLC/RL A1 (2018+)
18	11.4018.082.000	FORK COMPRESSION DAMPER KNOB KIT - CROWN CHARGER2 RLC - RS-1 A1+ (2018+)
19	11.4018.082.001	FORK COMPRESSION DAMPER KNOB KIT - REMOTE CHARGER2 RL - RS-1 A1+ (2018+)
	TOOLS/GREASE/FLUIDS	
ns	00.4318.031.000	FORK LOWER LEG DUST SEAL INSTALLATION TOOL 32MM (FOR FLANGELESS AND FLANGED DUST SEALS)
ns	00.4315.022.010	REAR SHOCK SCHRADER VALVE REMOVAL TOOL ROCKSHOX
ns	00.4315.023.010	HIGH-PRESSURE FORK/SHOCK PUMP (300 PSI MAX) ROCKSHOX
ns	00.4315.023.040	HIGH-PRESSURE FORK/SHOCK PUMP (300 PSI MAX) ROCKSHOX DIGITALGAUGE
15	00.4318.012.000	FORK ANCHOR FITTING TOOL FOR RS1 (REVERSE THREADED)
ns	00.4318.007.001	ROCKSHOX STANDARD BLEED KIT (INCLUDES 2 SYRINGES/FITTINGS, REVERB HYDRAULIC FLUID, 120ML BOTTLE NEW)
ns	11.4315.021.020	ROCKSHOX SUSPENSION OIL, 5WT, 120ML BOTTLE - FORK DAMPER
ns	11.4015.354.010	ROCKSHOX SUSPENSION OIL, 5WT, 1 LITER BOTTLE - FORK DAMPER
ns	11.4015.354.030	ROCKSHOX SUSPENSION OIL, 15WT, 1 LITER BOTTLE - LOWER LEGS
ns	00.4318.008.000	GREASE SRAM BUTTER 20ML SYRINGE, FRICTION REDUCING GREASE BYSLICKOLEUM - DOUBLE TIME HUB PAWLS, FORKS & REVERB SERVICE
ns	00.4318.008.001	GREASE SRAM BUTTER 1OZ CONTAINER, FRICTION REDUCING GREASE BY SLICKOLEUM - DOUBLE TIME HUB PAWLS, FORKS & REVERB SERVICE

RS-1 A1-A2 (2015-2018)

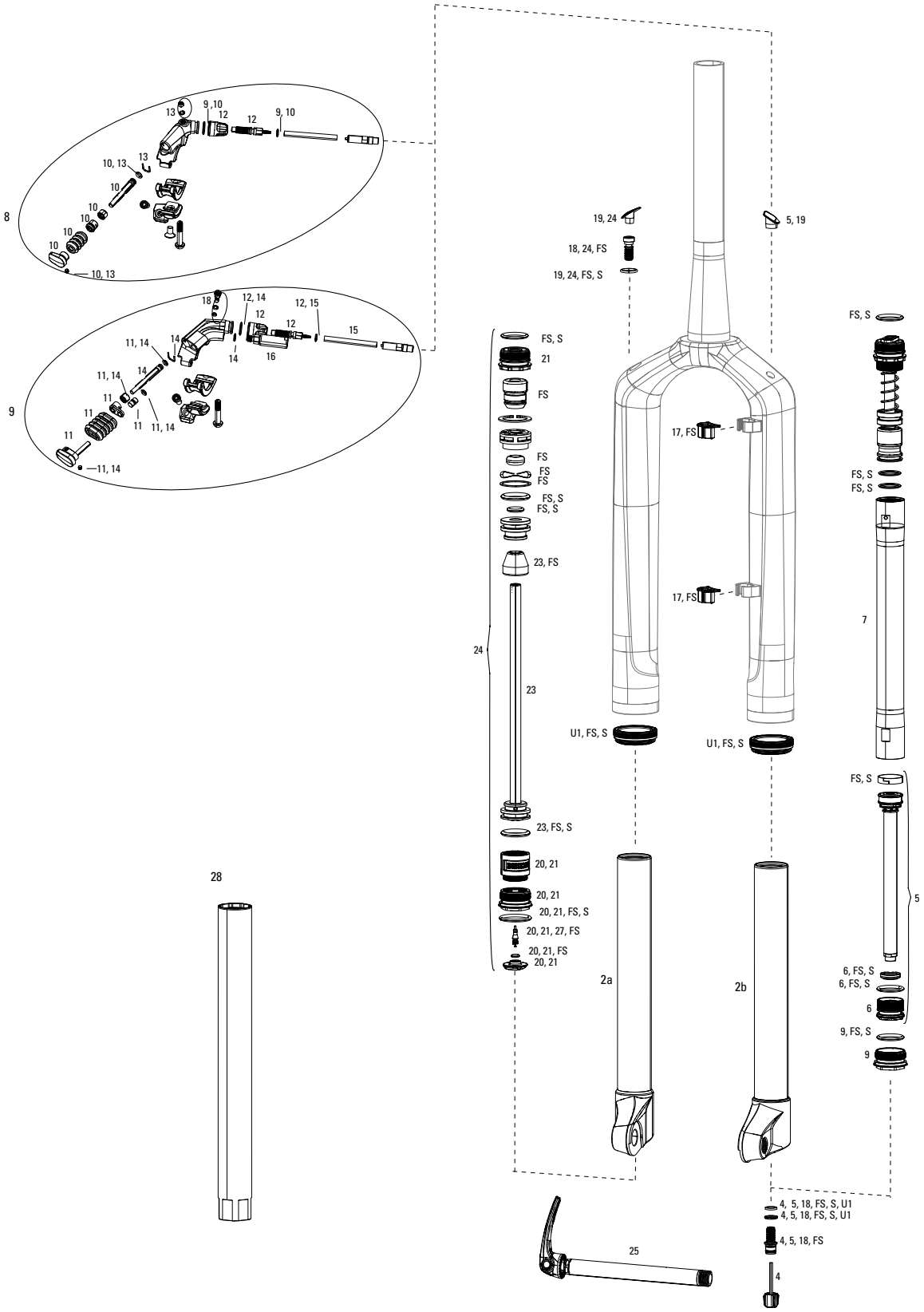

Note:

1. Full service kits include replaceable o-rings, glide rings, retaining rings, crush washers, crush washer retainers and shaft bolts/nuts. All air service kits include replacement schrader valve cores. All basic service kits include the following replaceable wear items: o-rings, glide rings, dust seals, and foam rings.
2. 2013+ XLoc remote uses Reverb hydraulic fluid.
3. Decal pages can be found in back of the catalog.
4. Inner tubes must be replaced as a pair for correct wheel alignment.

RS-1 A1-A2 (2015-2018)

	UPGRADES	
U1	00.4318.045.003	FORK DUST WIPER UPGRADE KIT - 32MM BLACK FLANGELESS ULTRA-LOW FRICTION SKF SEALS (INCLUDES DUST WIPERS & 4MM FOAM RINGS) - BLUTO/RS-1/SID B1 (2017+)/32MM BOOST™
	FORKS	
ns	11.4018.096.002	FORK SPRING SEALHEAD - 32mm DEBONAIR BLACK (REPLACES FLOATING SEALHEAD, BASEPLATE & WAVE WASHER) SID A1-A4(2011-2016)/REBA A2+(2013+)/BLUTO A1+(2015+)
	SERVICE	
FS	11.4018.054.000	FORK SERVICE KIT - FULL SERVICE SOLO AIR (INCLUDES AIR SEALS, DAMPER SEALS & HARDWARE) - RS-1
S	00.4315.032.500	AM FORK SERVICE KIT, BASIC (INCLUDES DUST SEALS, FOAM RINGS,O-RING SEALS) - RS1
	INNER TUBES	
2a	11.4018.042.010	FORK LOWER LEG - (DECALS NOT INCLUDED) INNER TUBE STANCHION RIGHT SIDE BLACK - RS-1 A1+ (2015+)
2b	11.4018.042.020	FORK LOWER LEG - (DECALS NOT INCLUDED) INNER TUBE STANCHION LEFT SIDE BLACK - RS-1 A1+ (2015+)
2a	11.4018.042.030	FORK LOWER LEG - (DECALS NOT INCLUDED) INNER TUBE STANCHION RIGHT SIDE DIFFUSION BLACK - RS-1 A1+ (2015+)
2b	11.4018.042.040	FORK LOWER LEG - (DECALS NOT INCLUDED) INNER TUBE STANCHION LEFT SIDE DIFFUSION BLACK - RS-1 A1+ (2015+)
	DAMPER	
4	11.4015.404.024	FORK REBOUND DAMPER KNOB KIT - (INCLUDES ADJUSTER KNOB & BOLT) - RS-1
5	11.4018.025.013	FORK REBOUND DAMPER - (INCLUDES SHAFT BOLT & SEALHEAD) - RS-1
6	11.4015.353.050	FORK DAMPER SEALHEAD ASSEMBLY - ACCELERATOR 32MM - RS-1
7	11.4018.043.010	FORK DAMPER CARTRIDGE TUBE - RS-1 A1-A2 (2015-2018)
8	11.4315.013.090	REMOTE - XLOC SPRINT RIGHT GOLD ADJUSTER (INCLUDES HOSE/BANJO/COVER PART) - RS-1
8	11.4315.013.100	REMOTE - XLOC SPRINT LEFT GOLD ADJUSTER (INCLUDES HOSE/BANJO/COVER PART) - RS-1
9	11.4315.013.110	REMOTE - XLOC FULL SPRINT RIGHT GOLD ADJUSTER (INCLUDES HOSE/BANJO/COVER PART) - RS-1
9	11.4315.013.120	REMOTE - XLOC FULL SPRINT LEFT GOLD ADJUSTER (INCLUDES HOSE/BANJO/COVER PART) - RS-1
10	11.4315.014.010	REMOTE BUTTON KIT - XLOC LEFT (INCLUDES BUTTON, MASTER PISTON ASSEMBLY, BOOT) - XLOC
10	11.4315.014.020	REMOTE BUTTON KIT - XLOC RIGHT (INCLUDES BUTTON, MASTER PISTON ASSEMBLY, BOOT) - XLOC
11	11.4318.007.000	REMOTE BUTTON KIT - XLOC FULL SPRINT (INCLUDES, BUTTON, BOOT, MASTER PISTON ASSEMBLY, XLOC FULL SPRINT) -XLOC FULL SPRINT W/GOLD ADJUSTER
12	11.4318.008.000	REMOTE ADJUSTER KIT - XLOC FLOODGATE - XLOC SPRINT/FULL SPRINT - GOLD ADJUSTER 2014-2016
13	11.4315.019.000	REMOTE SERVICE KIT - XLOC SPRINT- SID/REVELATION
14	11.4318.006.010	REMOTE SERVICE KIT - XLOC FULL SPRINT (INCLUDES RATCHET WHEEL & O-RINGS) - MONARCH XX/SID/REVELATION
15	11.4318.002.020	REMOTE HYDRAULIC HOSE KIT - 2000M XLOC FULL SPRINT CONNECTAMAJIG (INCLUDES, BARB, COMPRESSION NUT & CONNECTAMAJIG) - MONARCH XX FULLSPRINT
ns	11.4315.011.030	ROCKSHOX BLEED KIT (XLOC/TOTEM) QTY 2 (INCLUDES TWO SYRINGESAND FITTINGS, ONE TORX TOOL)
16	11.4318.005.000	REMOTE CONNECTAMAJIG COLLAR - BLACK - REVERB/XLOC FULL SPRINT
17	11.4018.046.000	FORK CFU CABLE GUIDE CLIPS - CSU (QTY 2) - RS-1
18	11.4015.403.060	FORK SHAFT FASTENER KIT - (INCLUDES SHAFT BOLTS & CRUSH WASHERS) - RS-1
19	11.4018.047.000	FORK CFU COVER KIT - (INCLUDES AIR SIDE & DAMPER SIDE COVER) - RS-1
	SPRING	
20	11.4018.012.006	FORK SPRING AIR TOP CAP - 32MM (ALUMINUM UPPER TUBES ONLY, BOTTOMLESS TOKEN COMPATIBLE) - REBA A1-A5/SIDA1-A4/REVELATION A1-A4/RS-1 A+/BLUTO A1+/ARGYLE A1+
21	11.4018.032.002	FORK SPRING AIR TOP CAP - 32MM SOLO AIR/DEBONAIR (INCLUDES 5 TOKENS, INTERNALLY THREADED AIR CAP) REBA/SID/REVELATION/RS-1/BLUTO/ARGYLE RCT
22	11.4018.032.003	FORK SPRING BOTTOMLESS TOKENS - SOLO AIR/DEBONAIR (QTY 5) - SID/REBA/REVELATION/RS-1/BLUTO/ARGYLE RCT SOLO AIR/35G
23	11.4018.021.012	FORK SPRING SOLO AIR SHAFT - 130mm-27" (INCLUDES AIR SHAFT, PISTON & SEAL) 130mm-CHASSIS ONLY- RS-1
23	11.4018.021.005	FORK SPRING SOLO AIR SHAFT - 120MM-26"/RS-1 (INCLUDES AIR SHAFT, PISTON & SEAL) - SIDB A2-A4(26")/REBA A3-A7(26")/RS-1
23	11.4018.021.006	FORK SPRING SOLO AIR SHAFT - 110MM-26"/RS-1 (INCLUDES AIR SHAFT, PISTON & SEAL) - SIDB A2-A4(26")/REBA A3-A7(26")/RS-1
23	11.4018.021.007	FORK SPRING SOLO AIR SHAFT - 100MM-26"/RS-1 (INCLUDES AIR SHAFT, PISTON & SEAL) - SIDB A2-A4(26")/REBA A3-A7(26")/RS-1
23	11.4018.021.009	FORK SPRING SOLO AIR SHAFT - 80MM-26"/RS-1 (INCLUDES AIR SHAFT, PISTON & SEAL) - SIDB A2-A4(26")/REBA A3-A7(26")/RS-1
24	11.4018.048.001	FORK SPRING SOLO AIR ASSEMBLY - 120MM (INCLUDES TOP CAP, AIR PISTON, SHAFT BOLT) - RS-1 A1+(2015+)
24	11.4018.048.000	FORK SPRING SOLO AIR ASSEMBLY - 100MM (INCLUDES TOP CAP, AIR PISTON, SHAFT BOLT) - RS-1 A1+(2015+)
	MAXLE	
25	00.4318.005.001	AXLE MAXLE ULTIMATE FRONT, 15X100, LENGTH 146.5MM, THREAD LENGTH 9MM, THREAD PITCH M15X1.50 - PIKE, RS1, LYRIK B1, YARI, SID, SID SL, SID 35MM
ns	11.4318.004.000	AXLE MAXLE - ULTIMATE LEVER ASSEMBLY B1
	SPARES	
bulk	11.4015.259.000	FORK CRUSH WASHERS - 8MM (QTY 50)
bulk	11.4015.260.000	FORK CRUSH WASHER RETAINER - 8MM (QTY 50)
27	11.4308.327.002	AIR VALVE KIT - SCHRADER CORE (QTY 2) - FORKS/SHOCKS/REVERB
	TOOLS/GREASE/FLUIDS	
ns	00.4318.031.000	FORK LOWER LEG DUST SEAL INSTALLATION TOOL 32MM (FOR FLANGELESS AND FLANGED DUST SEALS)
ns	00.4315.022.010	REAR SHOCK SCHRADER VALVE REMOVAL TOOL ROCKSHOX
ns	00.4315.023.010	HIGH-PRESSURE FORK/SHOCK PUMP (300 PSI MAX) ROCKSHOX
ns	00.4315.023.040	HIGH-PRESSURE FORK/SHOCK PUMP (300 PSI MAX) ROCKSHOX DIGITALGAUGE
28	00.4318.012.000	FORK ANCHOR FITTING TOOL FOR RS1 (REVERSE THREADED)
ns	00.4318.007.001	ROCKSHOX STANDARD BLEED KIT (INCLUDES 2 SYRINGES/FITTINGS, REVERB HYDRAULIC FLUID, 120ML BOTTLE NEW)
ns	11.4315.021.020	ROCKSHOX SUSPENSION OIL, 5WT, 120ML BOTTLE - FORK DAMPER
ns	11.4015.354.010	ROCKSHOX SUSPENSION OIL, 5WT, 1 LITER BOTTLE - FORK DAMPER
ns	11.4015.354.030	ROCKSHOX SUSPENSION OIL, 15WT, 1 LITER BOTTLE - LOWER LEGS
ns	00.4318.008.000	GREASE SRAM BUTTER 20ML SYRINGE, FRICTION REDUCING GREASE BYSLICKOLEUM - DOUBLE TIME HUB PAWLS, FORKS & REVERB SERVICE
ns	00.4318.008.001	GREASE SRAM BUTTER 1OZ CONTAINER, FRICTION REDUCING GREASE BY SLICKOLEUM - DOUBLE TIME HUB PAWLS, FORKS & REVERB SERVICE

REVELATION RC 35mm A1-A3/CHRC A1 (2018-2020)

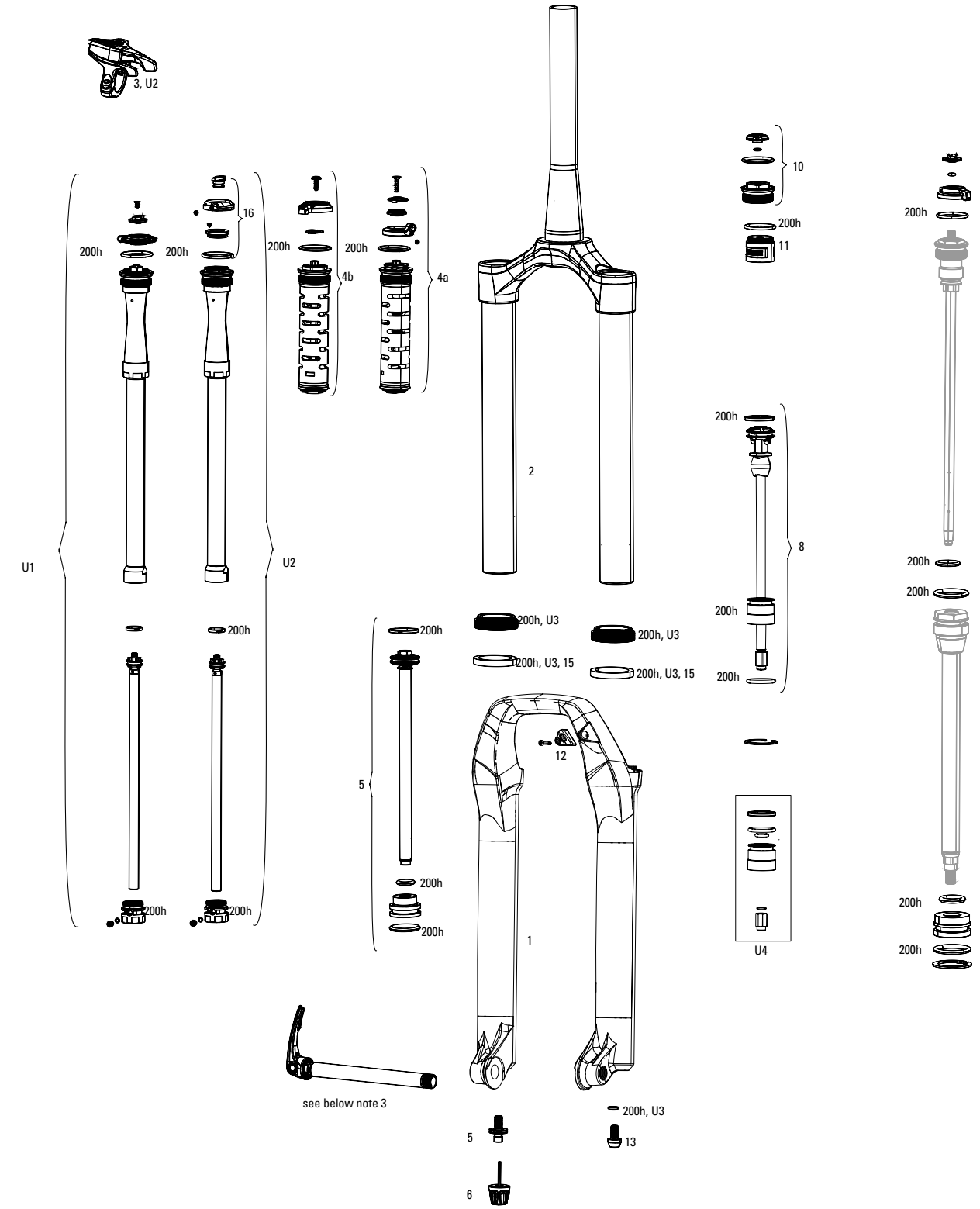

Note:

1. 200H/1 year service kits include replaceable o-rings, glide rings, retaining rings, crush washers, crush washer retainers. All air service kits include replacement schrader valve cores.
2. 2018+ Revelation has 35mm uppder tubes, not cokmpatible with 32mm.
3. Decal and Maxle pages can be found in back of the catalog.

REVELATION RC 35mm A1-A3/CHRC A1 (2018-2020)

	UPGRADE	
U1	00.4020.169.003	DAMPER UPGRADE KIT - CHARGER2.1 RCT3 CROWN (INCLUDES COMPLETE RIGHT SIDE INTERNALS) - PIKE 27.5"BOOST(A2/2017)/PIKE27.5"/29"(B1+/2018+)/REVELATION(A1+,35MM/2018+)
U2	00.4018.783.016	DAMPER UPGRADE KIT - CHARGER2 RCT REMOTE (INCLUDES COMPLETE RIGHT SIDE INTERNALS & ONELOCREMOTE) - PIKE 27.5"BOOST(A2/2017)/PIKE27.5"/29"(B1+/2018+)/ REVELATION(A1+,35MM/2018+)
U3	00.4318.045.004	FORK DUST WIPER UPGRADE KIT - 35MM BLACK FLANGELESS ULTRA-LOW FRICTION SKF SEALS (INCLUDES DUST WIPERS, 4MM & 6MM FOAM RINGS-PIKE/LYRIKB1/YARI/REVELATION/BOXXER/ DOMAIN/35/SID35MM
U4	00.4020.573.000	SEAL HEAD UPGRADE KIT - DEBONAIR C1 35MM SEAL HEAD (INCLUDES SEAL HEAD, PISTON QUADRING & SPECIFIC NUT) - LYRIK RC C2+,RCT3 C1+(2019+)/YARI B1+/PIKE B2+/REVELATION A2+ (2019+)
ns	00.4020.573.000	SEAL HEAD UPGRADE KIT - DEBONAIR C1 35MM SEAL HEAD (INCLUDES SEAL HEAD & SPECIFIC NUT) - LYRIK RC C2+,RCT3 C1+(2019+)/YARI B1+/PIKE B2+/REVELATION A2+ (2019+)
8	00.4020.552.000	Air Spring Upgrade Kit - DebonAir C1 160mm (Includes DebonAir C1Assembly, seal head) - PIKE B1+/Revelation A1+ (2018+)
8	00.4020.552.001	Air Spring Upgrade Kit - DebonAir C1 150mm (Includes DebonAir C1Assembly, seal head) - PIKE B1+/Revelation A1+ (2018+)
8	00.4020.552.002	Air Spring Upgrade Kit - DebonAir C1 140mm (Includes DebonAir C1Assembly, seal head) - PIKE B1+/Revelation A1+ (2018+)
8	00.4020.552.003	Air Spring Upgrade Kit - DebonAir C1 130mm (Includes DebonAir C1Assembly, seal head) - PIKE B1+/Revelation A1+ (2018+)
8	00.4020.552.004	Air Spring Upgrade Kit - DebonAir C1 120mm (Includes DebonAir C1Assembly, seal head) - PIKE B1+/Revelation A1+ (2018+)
	SERVICE	
200h	00.4315.032.642	200 HOUR/1 YEAR SERVICE KIT (INCLUDES DUST SEALS, FOAM RINGS, O-RING SEALS) - REVELATION MOTION CONTROL RC A1 (2018)
200h	00.4318.025.180	200 HOUR/1 YEAR SERVICE KIT (INCLUDES DUST SEALS, FOAM RINGS, O-RINGS, DAMPER SEALHEAD, DB C1 SEALHD)-YARI CHRC B1+/RC B2-B3/PIKE B3+/LYRIK C2+ SELECT/REVELATION CHRC A1+/ RC A2-A3
	LOWER LEGS	
1	11.4018.091.023	FORK LOWER LEG - (DECALS NOT INCLUDED, LOW FRICTION SKF WIPER SEALS) 29 15X110 BOOST™ DIFFUSION BLACK - PIKE B1-B2/SELECT/SELECT+ B3 (2018-2020+), REVELATION (35MM A1) (2018+)
1	11.4018.091.022	FORK LOWER LEG - (DECALS NOT INCLUDED, LOW FRICTION SKF WIPER SEALS) 29 15X110 BOOST™ BLACK - PIKE B1-B2/SELECT/SELECT+B3 (2018-2020+)/REVELATION (35MM A1) (2018+)
1	11.4018.091.027	FORK LOWER LEG - (DECALS NOT INCLUDED, LOW FRICTION SKF WIPER SEALS) 27 15X110 BOOST™ DIFFUSION BLACK - PIKE B1-B2/SELECT/SELECT+ B3 (2018-2020+)/REVELATION (35MM A1) (2018+)
1	11.4018.091.026	FORK LOWER LEG - (DECALS NOT INCLUDED, LOW FRICTION SKF WIPER SEALS) 27 15X110 BOOST™ BLACK - PIKE B1-B2/SELECT/SELECT+B3 (2018-2020+)/REVELATION (35MM A1) (2018+)
	CSU	
2	11.4018.008.578	FORK CSU - DEBONAIR 27 46OFF-SET TAPER BLACK (NO GRADIENTS) - REVELATION A1 (35MM) (2018+)
2	11.4018.008.579	FORK CSU - DEBONAIR 27 46OFF-SET TAPER DIFFUSION BLACK (NO GRADIENTS) - REVELATION A1 (35MM) (2018+)
2	11.4018.008.580	FORK CSU - DEBONAIR 29 51OFF-SET TAPER BLACK (NO GRADIENTS) - REVELATION A1 (35MM) (2018+)
2	11.4018.008.581	FORK CSU - DEBONAIR 29 51OFF-SET TAPER DIFFUSION BLACK (NO GRADIENTS) - REVELATION A1 (35MM) (2018+)
	DAMPER INTERNALS	
3	00.4318.002.009	REMOTE - ONELOC LEFT/ABOVE, RIGHT/BELOW 10MM, REMOTE ONLY (INCLUDES REMOTE, CABLE&HOUSING)-SID,REBA,REVELATION,BLUTO,SEKTOR,RECONGOLD(2013-2017)/JUDY
3	00.4318.002.010	REMOTE - ONELOC RIGHT/ABOVE, LEFT/BELOW 10MM, REMOTE ONLY (INCLUDES REMOTE, CABLE&HOUSING)-SID,REBA,REVELATION,BLUTO,SEKTOR,RECONGOLD(2013-2017)/JUDY
4a	11.4015.544.431	FORK COMPRESSION DAMPER - REMOTE 10MM (2013+ PUSHLOC, ONELOC, TWISTLOC) MOCO (INCLUDES SPOOL & CABLE CLAMP) - REVELATION RC A1+ (2018+)
4b	11.4015.544.432	FORK COMPRESSION DAMPER - CROWN, MOCO (INCLUDES COMPRESSION KNOB & SCREW) - REVELATION RC A1+(2018+)
5	11.4018.025.022	FORK REBOUND DAMPER - (INCLUDES SHAFT BOLT & SEALHEAD) - REVELATION RC A1 (2018+)
6	11.4015.404.028	FORK REBOUND DAMPER KNOB KIT - (INCLUDES ADJUSTER KNOB & BOLT) - CHARGER RC - LYRIK SELECT RC C2 (2020+), PIKE SELECT RC B3 (2020+), REVELATION RC A1-A2, YARI CHRC B1
ns	11.4018.104.024	FORK DAMPER ASSEMBLY - REMOTE CHARGER RC 3P (35MM) 130-150MM 29 (INCLUDES DAMPER ASSEMBLY) - REVELATION A3 (2020) - SCOTT
	SPRING INTERNALS	
10	11.4018.012.010	FORK SPRING AIR TOP CAP - 35MM (.5MM THREAD PITCH) BOOST™ 15X110 - PIKE A2/LYRIK A1+/YARI A1+/REVELATION A1+(2018+)/PIKE DJ (2017+)
11	11.4018.032.000	FORK SPRING BOTTOMLESS TOKENS - 35MM/38MM SOLO AIR/DEBONAIR (QTY 3) - PIKE/BOXXER B1/LYRIK B1/YARI/SID 35MM/ZEB
11	11.4018.032.001	FORK SPRING BOTTOMLESS TOKENS - 35MM/38MM SOLO AIR/DEBONAIR (QTY 10) PIKE/BOXXER B1/LYRIK B1/YARI/SID 35MM/ZEB
	SPARES	
12	11.4015.534.010	FORK HOSE CLAMP - PIKE/LYRIK/YARI/SID/REVELATION/BOXXER/XC30/30G/30S/RECON/SEKTOR/BLUTO/REBA/35G/35S
13	11.4015.403.100	FORK SHAFT FASTENER KIT - (INCLUDES SHAFT BOLTS & CRUSH WASHERS) - YARI A1+ (2016+), LYRIK A1-A2 (2010-2016), SID B1-C1 (2021), REVELATION RC A1-A2 (2018-2020)
15	11.4018.028.005	FORK FOAM RING KIT - 35MM X 6MM (QTY 20) - PIKE/LYRIK B1/YARI/BOXXER/DOMAIN DUAL CROWN
	TOOLS/GREASE/FLUIDS	
ns	00.4318.032.000	FORK LOWER LEG DUST SEAL INSTALLATION TOOL 35MM (FOR FLANGELESS AND FLANGED DUST SEALS)
ns	00.4315.023.010	HIGH-PRESSURE FORK/SHOCK PUMP (300 PSI MAX) ROCKSHOX
ns	00.4315.023.040	HIGH-PRESSURE FORK/SHOCK PUMP (300 PSI MAX) ROCKSHOX DIGITALGAUGE
ns	00.4315.022.010	REAR SHOCK SCHRADER VALVE REMOVAL TOOL ROCKSHOX
ns	11.4315.021.080	ROCKSHOX SUSPENSION OIL, 0W-30, 120ML BOTTLE - PIKE/REVELATION 2018+/LYRIK B1/YARI/SID 2020+ LOWER LEGS
ns	11.4015.354.050	ROCKSHOX SUSPENSION OIL, 0-W30, 1 LITER BOTTLE - PIKE/REVELATION 2018+/LYRIK B1/YARI/SID 2020+ LOWER LEGS
ns	11.4115.094.030	MAXIMA SUSPENSION OIL PLUSH, 3WT 1 LITER BOTTLE - REAR SHOCK/CHARGER DAMPER
ns	00.4318.007.000	RockShox Charger Damper Standard Bleed Kit (includes Syringe, Charger1 fitting, Standard fitting, Suspension Oil 3w) - Charger/RaceDay dampers
ns	00.4318.008.002	GREASE ROCKSHOX DYNAMIC SEAL GREASE (PTFE) 1OZ - RECOMMENDED FOR SERVICING REAR SHOCKS & FORKS
ns	00.4318.008.004	GREASE ROCKSHOX DYNAMIC SEAL GREASE 500ML - RECOMMENDED FOR SERVICING REAR SHOCKS & FORKS

REVELATION 32mm A1-A7 (2010-2017)

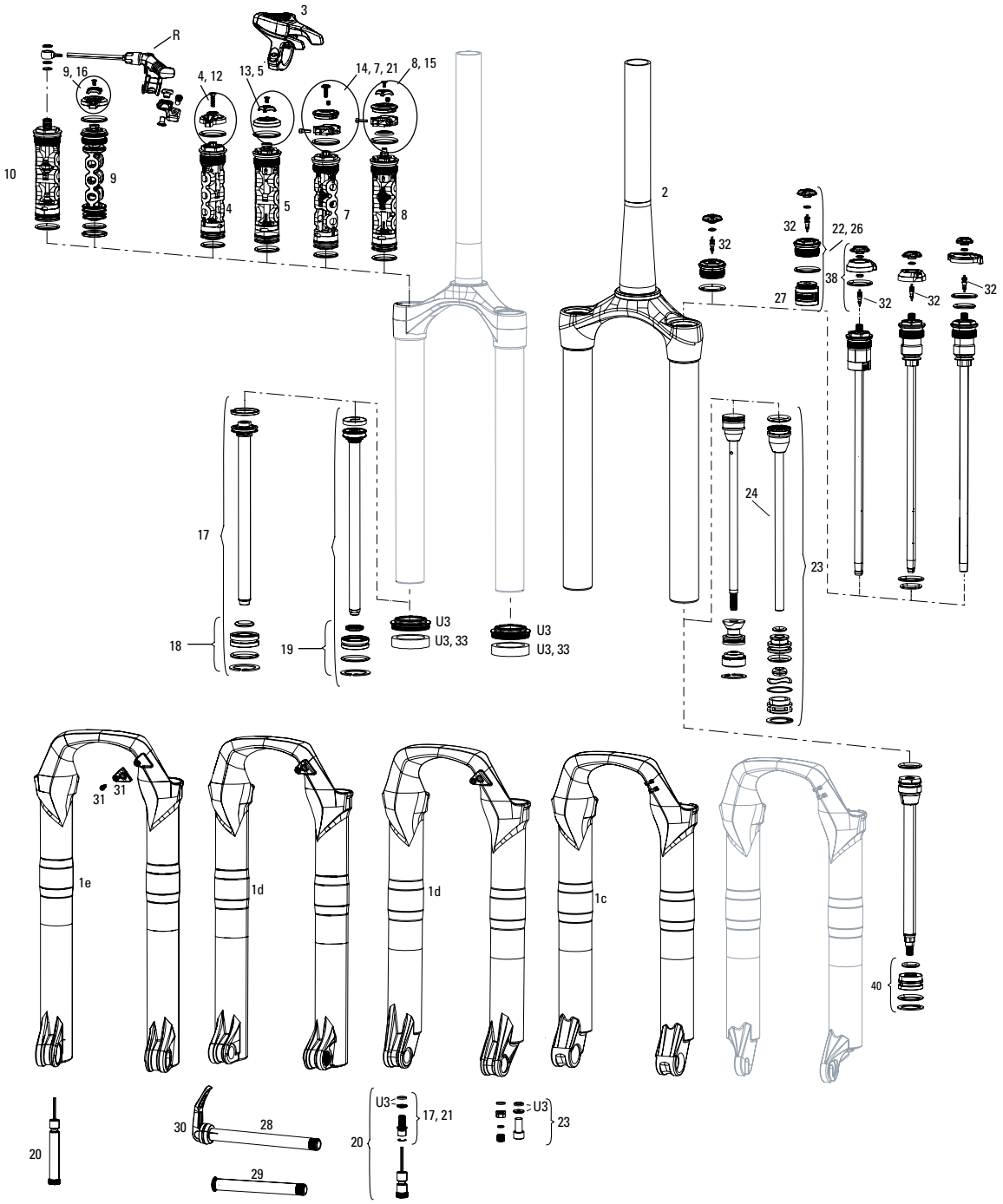

Note:

IMPORTANT - 2010+ Revelation: 150mm air spring assembly NOT compatible with 2006-2009 Revelation forks.

1. Full service kits include replaceable rebound damper sealheads, o-rings, glide rings, retaining rings, crush washers, crush washer retainers and shaft bolts/nuts. All air service kits include replacement schrader valve cores. Not all service parts are pictured. All basic service kits include the following replaceable wear items: o-rings, glide rings, dust seals, and foam rings.
2. Rebound damper and spring shaft kits include crush washers, crush washer retainers and shaft bolts, as well as upper tube retaining rings and rebound adjuster knob.
3. Convert from Crown Adjust to Remote Adjust: Use upgrade kits.
4. Solo Air internals require Solo Air CSU; Solo Air internals are not compatible with Dual Air CSU. Dual Air internals require Dual Air CSU; Dual Air internals are not compatible with Solo Air CSU.
5. Revelation RCT3 A3 (2014+) compression damper must be used with Revelation A3 rebound damper (with Rapid Recovery valving). Revelation RCT3 A2 (2012-2013) compression damper is not compatible with Revelation RCT3 A3 compression damper.
6. 2011-2012 XLoc remote uses 2.5wt suspension fluid. 2013+ XLoc remote uses Reverb hydraulic fluid. Use fluid indicated on fork top cap.

REVELATION 32mm A1-A7 (2010-2017)

	UPGRADES	
U3	00.4318.045.002	FORK DUST WIPER UPGRADE KIT - 32MM BLACK FLANGED LOW FRICTION SEALS (INCLUDES DUST WIPERS, 5MM & 10MM FOAM RINGS) - SID/REVELATION/REBA/ARGLE/SEKTOR/TORA/RECON/XC32
	SERVICE	
ns	11.4015.406.000	FORK SERVICE KIT - DUAL AIR/MOCO - REVELATION 2010 2011
ns	11.4015.550.000	FORK SERVICE KIT - FULL SERVICE DUAL AIR/MOCO DNA - REVELATION 2012
ns	11.4015.553.000	FORK SERVICE KIT - FULL SERVICE DUAL POSITION AIR/MOCO DNA - REVELATION 2012
ns	11.4018.007.000	FORK SERVICE KIT - FULL SERVICE DUAL POSITION AIR (INCLUDES AIR SEALS, DAMPER SEALS & HARDWARE) (DUAL WING ADJUSTER KNOB) - REVELATION 2012
ns	11.4018.019.001	FORK SERVICE KIT - FULL SERVICE SOLO AIR (INCLUDES AIR SEALS, DAMPER SEALS & HARDWARE & BLACK SEALS) - REVELATION A2-A3 (2013-2016)
ns	00.4315.032.180	AM FORK SERVICE KIT, BASIC (INCLUDES DUST SEALS, FOAM RINGS,O-RING SEALS) - REVELATION DUAL AIR (2012)
ns	00.4315.032.320	AM FORK SERVICE KIT, BASIC (INCLUDES DUST SEALS, FOAM RINGS,O-RING SEALS) - REVELATION DUAL POSITION AIR (2012-2013)
ns	00.4315.032.440	AM FORK SERVICE KIT, BASIC (INCLUDES DUST SEALS, FOAM RINGS,O-RING SEALS) - REVELATION SOLO AIR A3 (2014-2016)
ns	00.4315.032.450	AM FORK SERVICE KIT, BASIC (INCLUDES DUST SEALS, FOAM RINGS,O-RING SEALS) - REVELATION DUAL POSITION AIR A3 (2014-2016)
ns	11.4015.407.000	FORK SERVICE KIT - AIR U-TURN/MOCO - REVELATION 2010
	LOWER LEGS	
1c	11.4018.006.183	FORK LOWER LEG - (DECALS NOT INCLUDED) REVELATION 26 15X100 DIFFUSION BLACK - REVELATION A1-A3 (2010-2017), REBA 26 (2020+)
1d	11.4018.006.184	FORK LOWER LEG - (DECALS NOT INCLUDED) 27 15X100 BLACK - REVELATION A1-A3 (2010-2017) REBA A7 130-150MM (2018+)
1d	11.4018.006.186	FORK LOWER LEG - (DECALS NOT INCLUDED) 27 15X100 DIFFUSION BLACK A1-A3 - REVELATION (2010 2017) REBA A7 130-150MM (2018+)
1e	11.4018.006.189	FORK LOWER LEG - (DECALS NOT INCLUDED) 29 15X100 DIFFUSION BLACK - REVELATION A1-A3 (2010-2016) REBA A7130-150MM (2018+)
	CSU	
2	11.4018.008.290	FORK CSU - SOLO AIR 27.5 ALUMINUM TAPER BLACK (WITH BLACK UPPER TUBES) - REVELATION A2-A3 (2013-2016)
2	11.4018.008.292	FORK CSU - SOLO AIR 27.5 ALUMINUM TAPER DIFFUSION BLACK(WITH BLACK UPPER TUBES) - REVELATION A2-A3 (2013-2016)
2	11.4018.008.295	FORK CSU - DUAL POSITION AIR 27.5 ALUMINUM TAPER DIFFUSION BLACK (WITH BLACK UPPER TUBES) - REVELATION A2-A3 (2013-2016)
2	11.4018.008.296	FORK CSU - SOLO AIR 29 46 OFF-SET ALUMINUM TAPER BLACK (WITH BLACK UPPER TUBES) - REVELATION A2-A3 (2013-2016)
2	11.4018.008.298	FORK CSU - SOLO AIR 29 46 OFF-SET ALUMINUM TAPER DIFFUSION BLACK (WITH BLACK UPPER TUBES) - REVELATION A2-A3 (2013-2016)
2	11.4018.008.302	FORK CSU - SOLO AIR 29 51 OFF-SET ALUMINUM TAPER BLACK (WITH BLACK UPPER TUBES) - REVELATION A2-A3 (2013-2016)
2	11.4018.008.304	FORK CSU - SOLO AIR 29 51 OFF-SET ALUMINUM TAPER DIFFUSION BLACK (WITH BLACK UPPER TUBES) - REVELATION A2-A3 (2013-2016)
ns	11.4018.008.285	FORK CSU - DUAL POSITION AIR 26 ALUMINUM TAPER BLACK (WITH BLACK UPPER TUBES) - REVELATION A2-A3 (2013-2016)
ns	11.4018.008.299	FORK CSU - DUAL POSITION AIR 29 46 OFF-SET ALUMINUM TAPER BLACK (WITH BLACK UPPER TUBES) - REVELATION A2-A3 (2013-2016)
ns	11.4018.008.462	FORK CSU - SOLO AIR 2927+ 51 BOOST™ COMPATIBLE OFF-SET ALUMINUM TAPER BLACK (NO GRADIENTS) - REVELATION A2-A3 (2013-2016)
ns	11.4018.008.498	FORK CSU - SOLO AIR 27" BOOST™ COMPATIBLE 51MM OFF-SET ALUMINUM TAPER DIFFUSION BLACK - REVELATION A5
ns	11.4018.008.499	FORK CSU - SOLO AIR 29"/27.5" + BOOST™ COMPATIBLE 51MM OFF-SET ALUMINUM TAPER DIFFUSION BLACK - REVELATION A5
ns	11.4018.008.500	FORK CSU - SOLO AIR 29" 51 OFF-SET ALUMINUM TAPER DIFFUSION BLACK - REVELATION A5
	11.4018.120.000	FORK SPRING DUAL POSITION AIR KNOB - REVELATION A1+/PIKE A1+/LYRIK A1+/YARI A1+/ZEB A1+
	DAMPER	
ns	11.4308.848.000	REMOTE - POPLOC LEFT 17MM CABLE PULL - RL (PRE-2013) & ALL TK DAMPERS, (NOT COMPATIBLE WITH 2013+ MOCO)
ns	11.4308.849.000	REMOTE - POPLOC LEFT ADJUSTABLE 17MM CABLE PULL (NOT COMPATIBLE WITH 2013+ MOCO RL) - RL (PRE-2013) & TK DAMPERS
ns	11.4309.207.000	REMOTE - POPLOC RIGHT 17MM CABLE PULL - RL (PRE-2013) & ALL TK DAMPERS
ns	11.4309.208.000	REMOTE - POPLOC RIGHT ADJUSTABLE 17MM CABLE PULL (NOT COMPATIBLE WITH 2013+ MOCO RL) - RL (PRE-2013) & TK DAMPERS
3	00.4318.002.009	REMOTE - ONELOC LEFT/ABOVE, RIGHT/BELOW 10MM, REMOTE ONLY (INCLUDES REMOTE, CABLE&HOUSING)-SID,REBA,REVELATION,BLUTO,SEKTOR,RECONGOLD(2013-2017)/JUDY
3	00.4318.002.010	REMOTE - ONELOC RIGHT/ABOVE, LEFT/BELOW 10MM, REMOTE ONLY (INCLUDES REMOTE, CABLE&HOUSING)-SID,REBA,REVELATION,BLUTO,SEKTOR,RECONGOLD(2013-2017)/JUDY
R	11.4315.013.070	REMOTE - XLOC FULL SPRINT LEFT GOLD ADJUSTER (INCLUDES HOSE/BANJO) - SID/REVELATION/MONARCH XX
R	11.4315.013.080	REMOTE - XLOC FULL SPRINT RIGHT GOLD ADJUSTER (INCLUDES HOSE/BANJO) - SID/REVELATION/MONARCH XX
4	11.4015.544.090	FORK COMPRESSION DAMPER - CROWN MOCO DNA (INCLUDES COMPRESSION KNOB & SCREW) - REVELATION RL A1-A3 (2012-2016) REBA (2009-2011), REBA 26 (2020+)
5	11.4015.544.110	FORK COMPRESSION DAMPER - CROWN MOCO DNA (INCLUDES COMPRESSION KNOB, GATE KNOB & BOLT) - REVELATION RLT A1-A3 (2012-2016) REBA(2009-2011)
ns	11.4015.544.100	FORK COMPRESSION DAMPER - REMOTE 17MM (POPLOC, PRE-2013 PUSHLOC) MOCO DNA (INCLUDES SPOOL & CABLE CLAMP) - REVELATION RL A1-A2(2012-2013) REBA (2009-2011)
7	11.4015.544.250	FORK COMPRESSION DAMPER - REMOTE 10MM (2013+ PUSHLOC, ONELOC, TWISTLOC) MOCO RL (INCLUDES SPOOL & CABLE CLAMP) - REVELATION A2-A3 (2013-2016)
8	11.4015.544.120	FORK COMPRESSION DAMPER - REMOTE 17MM (POPLOC, PRE-2013 PUSHLOC) MOCO DNA (INCLUDES SPOOL & CABLE CLAMP) - REVELATION RLT A1-A2(2012-2013) REBA (2009-2011)
8	11.4015.544.260	FORK COMPRESSION DAMPER - REMOTE 10MM (2013+ PUSHLOC, ONELOC, TWISTLOC) MOCO RTL (INCLUDES SPOOL & CABLE CLAMP) - REVELATION A2-A3 (2013-2016)
ns	11.4015.544.130	FORK COMPRESSION DAMPER - CROWN MOCO DNA (INCLUDES COMPRESSION KNOB, GATE KNOB & BOLT) - REVELATION RCT3 A1-A2 (2012-2013) REBA (2009-2011)
9	11.4015.544.290	FORK COMPRESSION DAMPER - CROWN, MOCO DNA RCT3 (INCLUDES COMPRESSION KNOB, GATE KNOB & BOLT) - REVELATION A3 (2014-2016)REBA (2009-2011)
10	11.4015.544.200	FORK COMPRESSION DAMPER - REMOTE MOCO XX DNA (INCLUDES BANJO RETAINING RING) - REVELATION/SID A 80/100 XXWC 11/8" A1 A3 (2012-2016) REBA (2009-2011)
12	11.4015.547.020	FORK COMPRESSION DAMPER KNOB KIT - CROWN MOCO DNA - SID A RL/ REVELATION RL A1-A3 (2012-2016)
14	11.4015.547.040	FORK COMPRESSION DAMPER KNOB KIT - REMOTE 17MM (POPLOC, PRE-2013 PUSHLOC) MOCO DNA (INCLUDES CABLE CLAMP) - SID A RL/ REVELATION RL A1-A2 (2012-2013)
15	11.4015.547.050	FORK COMPRESSION DAMPER KNOB KIT - REMOTE 17MM (POPLOC, PRE-2013 PUSHLOC) MOCO DNA (INCLUDES CABLE CLAMP) - SID A RLT/ REVELATION RLT A1-A2 (2012-2013)
ns	11.4015.547.100	FORK COMPRESSION DAMPER KNOB KIT - CROWN CHARGER RCT3 (INCLUDES KNOB & SCREW) - SID A/REVELATION A1-A3, BLUTO A1 (2012-2016)
17	11.4018.025.003	FORK REBOUND DAMPER - (INCLUDES SHAFT BOLT & SEALHEAD) - REVELATION 26/ 27.5/ 29 A3 (2014-2016)
18	11.4015.353.010	FORK DAMPER SEALHEAD ASSEMBLY - MOCO 32MM - SIDA 2009-2014, SIDB 2011-2013, REBA 2009-PRESENT, REVELATION2009-2013, BLUTO RL 2015-PRESENT
19	11.4015.353.080	FORK DAMPER SEALHEAD ASSEMBLY - MOCO 32MM 12.5 ALUMINUM SHAFT- SIDB (2014-PRESENT), REVELATION (2014-PRESENT), BLUTO RLT (2015-PRESENT), SID XX/RL B1 (2017+)
20	11.4015.404.010	FORK REBOUND DAMPER KNOB KIT - (INCLUDES ADJUSTER KNOB & BOLT) ALUMINUM RED LONG - (USE WITH MAXLE LOWER LEG)
20	11.4015.318.000	FORK REBOUND DAMPER KNOB KIT - (INCLUDES ADJUSTER KNOB & BOLT) LONG/BOLT (ALUMINUM RED) - TORA/RECON/REBA/REVELATION 27/29"
21	11.4018.011.003	FORK COMPRESSION DAMPER KNOB KIT - REMOTE 10MM (2013+ PUSHLOC, ONELOC, TWISTLOC) RL - SID RL/REVELATION 2013-2016
ns	11.4015.294.000	FORK COMPRESSION DAMPER KNOB KIT - CROWN MOCO (INCLUDES SET SCREW, EXTERNAL FLOODGATE ADJUSTER) - SID RLT (2009-2011)/REBA RLT (2011-2012)/REVELATION RLT (2011-2012)
ns	11.4310.642.000	FORK COMPRESSION DAMPER KNOB KIT - CROWN ALUMINUM W/ CIR-CLIP (GATE CAP, EXT. GATE KNOB) - RECON GOLD/REVELATION (2009-2012)
ns	11.4310.643.000	FORK COMPRESSION DAMPER KNOB KIT - REMOTE SPOOL W/ CIR-CLIP (GATE CAP, EXTERNAL GATE KNOB, STEEL CABLE-STOP CLAMP) - RECON GOLD/REVELATION (2009-2012)

REVELATION 32mm A1-A7 (2010-2017)

	SPRING	
22	11.4018.012.006	FORK SPRING AIR TOP CAP - 32MM (ALUMINUM UPPER TUBES ONLY, BOTTOMLESS TOKEN COMPATIBLE) - REBA A1-A5/SIDA1-A4/REVELATION A1-A4/RS-1 A+/BLUTO A1+/ARGYLE A1+
23	11.4018.010.068	FORK SPRING SOLO AIR ASSEMBLY - 150MM-26/27.5/29 (INCLUDES TOP CAP, AIR PISTON, SHAFT BOLT) - REVELATION A2-A4 (2013- 2017)
23	11.4018.010.128	FORK SPRING SOLO AIR ASSEMBLY - 140MM-26/27.5/29 (INCLUDES TOP CAP, 1 BOTTOMLESS TOKEN, AIR PISTON, SHAFT BOLT) - REVELATION A1-A4 (2010- 2017)
23	11.4018.010.129	FORK SPRING SOLO AIR ASSEMBLY - 130MM-26/27.5/29 (INCLUDES TOP CAP, 2 BOTTOMLESS TOKENS, AIR PISTON, SHAFT BOLT) - REVELATION A1-A4 (2010- 2017)
23	11.4018.010.130	FORK SPRING SOLO AIR ASSEMBLY - 120MM-26/27.5/29 (INCLUDES TOP CAP, 3 BOTTOMLESS TOKENS, AIR PISTON, SHAFT BOLT) - REVELATION A1-A4 (2010- 2017)
23	11.4018.010.132	FORK SPRING SOLO AIR ASSEMBLY - 100mm-26/27.5/29 (INCLUDES TOP CAP, 5 BOTTOMLESS TOKENS, AIR PISTON, SHAFT BOLT) - REVELATION A1-A4 (2010- 2017)
24	11.4018.022.000	FORK SPRING SOLO AIR SHAFT - 150MM-26"/27.5"/29" (INCLUDES AIR SHAFT, PISTON & SEAL) - REVELATION 32MM-A1-A4 (2010-2017)
24	11.4018.022.001	FORK SPRING SOLO AIR SHAFT - 140MM-26"/27.5"/29" (INCLUDES AIR SHAFT, PISTON & SEAL) - REVELATION 32MM-A1-A4 (2010-2017)
24	11.4018.022.002	FORK SPRING SOLO AIR SHAFT - 130MM-26"/27.5"/29" (INCLUDES AIR SHAFT, PISTON & SEAL) - REVELATION 32MM-A1-A4 (2010-2017)
24	11.4018.022.003	FORK SPRING SOLO AIR SHAFT - 120MM-26"/27.5"/29" (INCLUDES AIR SHAFT, PISTON & SEAL) - REVELATION 32MM-A1-A4 (2010-2017)
24	11.4018.022.005	FORK SPRING SOLO AIR SHAFT - 100MM-26"/27.5"/29" (INCLUDES AIR SHAFT, PISTON & SEAL) - REVELATION 32MM-A1-A4 (2010-2017)
ns	11.4015.450.000	FORK SPRING TRAVEL SPACERS - ALL TRAVEL SPACER KIT (NOT COMPATIBLE WITH SID/REBA/REVELATION SOLO AIR SPRING)
26	11.4018.032.002	FORK SPRING AIR TOP CAP - 32MM SOLO AIR/DEBONAIR (INCLUDES 5 TOKENS, INTERNALLY THREADED AIR CAP) REBA/SID/REVELATION/RS-1/BLUTO/ARGYLE RCT
27	11.4018.032.003	FORK SPRING BOTTOMLESS TOKENS - SOLO AIR/DEBONAIR (QTY 5) - SID/REBA/REVELATION/RS-1/BLUTO/ARGYLE RCT SOLO AIR/35G
	MAXLE	
28	00.4318.005.002	AXLE MAXLE LITE FRONT, 15X100, LENGTH 148MM, THREAD LENGTH 9MM, THREAD PITCH M15X1.50 - REBA/REVELATION/RECON/SEKTOR/XC32/SID/SID SL/SID 35MM
28	00.4315.013.010	AXLE MAXLE LITE FRONT MTB 20X110 LENGTH 158MM THREAD LENGTH 9MM THREAD PITCH M20X2.0 - 32MM CHASSIS (2011-2016)
29	00.4318.005.018	AXLE MAXLE STEALTH FRONT, 15X100, LENGTH 148MM, THREAD LENGTH 9MM, THREAD PITCH M15X1.50 (NOT COMPATIBLE WITH RS-1) - 15X100, SID SL, SID 35MM
30	11.4318.004.001	AXLE MAXLE - LITE 15MM XC LEVER ASSEMBLY
	SPARES	
31	11.4015.534.010	FORK HOSE CLAMP - PIKE/LYRIK/YARI/SID/REVELATION/BOXXER/XC30/30G/30S/RECON/SEKTOR/BLUTO/REBA/35G/35S
32	11.4308.327.002	AIR VALVE KIT - SCHRADER CORE (QTY 2) - FORKS/SHOCKS/REVERB
bulk	11.4015.259.000	FORK CRUSH WASHERS - 8MM (QTY 50)
bulk	11.4015.260.000	FORK CRUSH WASHER RETAINER - 8MM (QTY 50)
33	11.4310.698.000	FORK FOAM RING KIT - 32MM X 10MM (QTY 20) - REVELATION/ARGYLE/SEKTOR/TORA/RECON/XC32
	TOOLS/GREASE/FLUIDS	
ns	00.4318.031.000	FORK LOWER LEG DUST SEAL INSTALLATION TOOL 32MM (FOR FLANGELESS AND FLANGED DUST SEALS)
ns	11.4315.011.030	ROCKSHOX BLEED KIT (XLOC/TOTEM) QTY 2 (INCLUDES TWO SYRINGESAND FITTINGS, ONE TORX TOOL)
ns	00.4315.023.010	HIGH-PRESSURE FORK/SHOCK PUMP (300 PSI MAX) ROCKSHOX
ns	00.4315.023.040	HIGH-PRESSURE FORK/SHOCK PUMP (300 PSI MAX) ROCKSHOX DIGITALGAUGE
ns	00.4315.022.010	REAR SHOCK SCHRADER VALVE REMOVAL TOOL ROCKSHOX
ns	00.4318.007.001	ROCKSHOX STANDARD BLEED KIT (INCLUDES 2 SYRINGES/FITTINGS, REVERB HYDRAULIC FLUID, 120ML BOTTLE NEW)
ns	11.4315.021.020	ROCKSHOX SUSPENSION OIL, 5WT, 120ML BOTTLE - FORK DAMPER
ns	11.4015.354.010	ROCKSHOX SUSPENSION OIL, 5WT, 1 LITER BOTTLE - FORK DAMPER
ns	11.4315.021.040	ROCKSHOX SUSPENSION OIL, 15WT, 120ML BOTTLE - LOWER LEGS
ns	11.4015.354.030	ROCKSHOX SUSPENSION OIL, 15WT, 1 LITER BOTTLE - LOWER LEGS
ns	00.4318.008.000	GREASE SRAM BUTTER 20ML SYRINGE, FRICTION REDUCING GREASE BYSLICKOLEUM - DOUBLE TIME HUB PAWLS, FORKS & REVERB SERVICE
ns	00.4318.008.001	GREASE SRAM BUTTER 1OZ CONTAINER, FRICTION REDUCING GREASE BY SLICKOLEUM - DOUBLE TIME HUB PAWLS, FORKS & REVERB SERVICE

PIKE SELECT/SELECT+/ULTIMATE B3 (2020-2021)

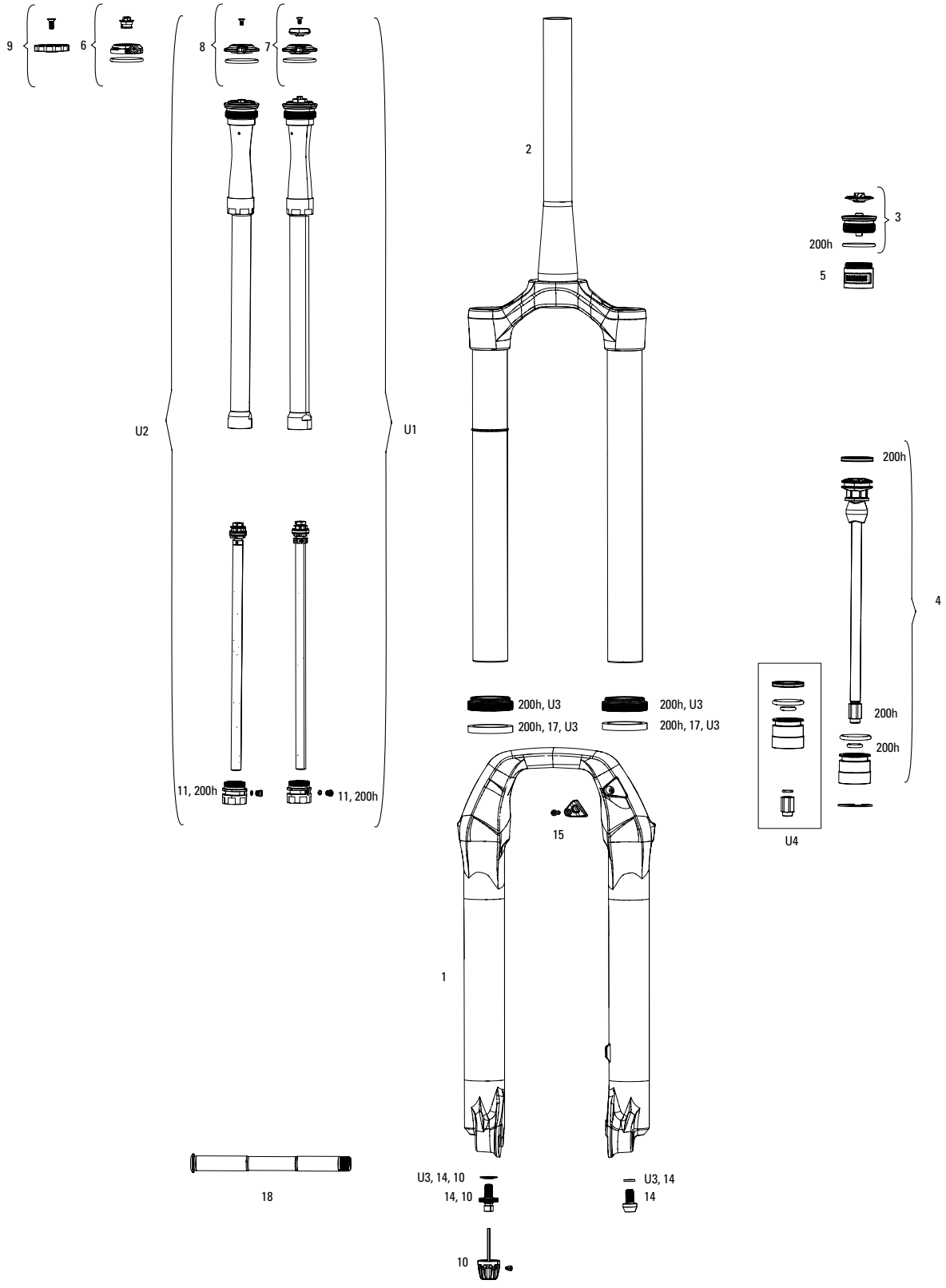

PIKE SELECT/SELECT+/ULTIMATE B3 (2020-2021)

	UPGRADE	
U1	00.4020.169.003	DAMPER UPGRADE KIT - CHARGER2.1 RCT3 CROWN (INCLUDES COMPLETE RIGHT SIDE INTERNALS) - PIKE 27.5"BOOST(A2/2017)/PIKE27.5"/29"(B1+/2018+)/REVELATION(A1+,35MM/2018+)
U2	00.4020.169.005	DAMPER UPGRADE KIT - CHARGER2.1 RC2 CROWN HIGH SPEED, LOW SPEED (INCLUDES RIGHT SIDE INTERNALS) - PIKE 27.5"BOOST(A2/2017)/PIKE27.5"/29"(B1+/2018+)/ REVELATION(A1+,35MM/2018+)
U3	00.4318.045.004	FORK DUST WIPER UPGRADE KIT - 35MM BLACK FLANGELESS ULTRA-LOW FRICTION SKF SEALS (INCLUDES DUST WIPERS, 4MM & 6MM FOAM RINGS-PIKE/LYRIKB1/YARI/ REVELATION/BOXXER/DOMAIN/35/SID35MM
4	00.4020.552.000	Air Spring Upgrade Kit - DebonAir C1 160mm (Includes DebonAir C1Assembly, seal head) - PIKE B1+/Revelation A1+ (2018+)
4	00.4020.552.001	Air Spring Upgrade Kit - DebonAir C1 150mm (Includes DebonAir C1Assembly, seal head) - PIKE B1+/Revelation A1+ (2018+)
4	00.4020.552.002	Air Spring Upgrade Kit - DebonAir C1 140mm (Includes DebonAir C1Assembly, seal head) - PIKE B1+/Revelation A1+ (2018+)
4	00.4020.552.003	Air Spring Upgrade Kit - DebonAir C1 130mm (Includes DebonAir C1Assembly, seal head) - PIKE B1+/Revelation A1+ (2018+)
4	00.4020.552.004	Air Spring Upgrade Kit - DebonAir C1 120mm (Includes DebonAir C1Assembly, seal head) - PIKE B1+/Revelation A1+ (2018+)
U4	00.4020.573.000	SEAL HEAD UPGRADE KIT - DEBONAIR C1 35MM SEAL HEAD (INCLUDES SEAL HEAD & SPECIFIC NUT) - LYRIK RC C2+,RCT3 C1+(2019+)/YARI B1+/PIKE B2+/REVELATION A2+ (2019+)
	SERVICE	
200h	00.4318.025.120	200 HOUR/1 YEAR SERVICE KIT (INCLUDES DUST SEALS, FOAM RINGS, O-RING SEALS, CHGR2.1 DAMPER SEALHEAD, DB AIR SPRING SEALHEAD) - LYRIK C2/PIKE B3 SEL+ AND ULT (2020)
200h	00.4318.025.180	200 HOUR/1 YEAR SERVICE KIT (INCLUDES DUST SEALS, FOAM RINGS, O-RINGS, DAMPER SEALHEAD, DB C1 SEALHD)-YARI CHRC B1+/RC B2-B3/PIKE B3+/LYRIK C2+ SELECT/REVELATION CHRC A1+/ RC A2-A3
	LOWER LEG	
1	11.4018.091.021	FORK LOWER LEG - (FOIL DECALS INCLUDED, LOW FRICTION SKF WIPER SEALS) 29 15X110 BOOST™ SILVER - PIKE ULTIMATE B3 (2020+)
1	11.4018.091.025	FORK LOWER LEG - (FOIL DECALS INCLUDED, LOW FRICTION SKF WIPER SEALS) 27 15X110 BOOST™ SILVER - PIKE ULTIMATE B3 (2020+)
1	11.4018.091.020	FORK LOWER LEG - (FOIL DECALS INCLUDED, LOW FRICTION SKF WIPER SEALS) 29 15X110 BOOST™ GLOSS BLACK - PIKE ULTIMATE B3 (2020+)
1	11.4018.091.024	FORK LOWER LEG - (FOIL DECALS INCLUDED, LOW FRICTION SKF WIPER SEALS) 27 15X110 BOOST™ GLOSS BLACK - PIKE ULTIMATE B3 (2020+)
1	11.4018.091.023	FORK LOWER LEG - (DECALS NOT INCLUDED, LOW FRICTION SKF WIPER SEALS) 29 15X110 BOOST™ DIFFUSION BLACK - PIKE B1-B2/SELECT/SELECT+ B3 (2018-2020+), REVELATION (35MM A1) (2018+)
1	11.4018.091.027	FORK LOWER LEG - (DECALS NOT INCLUDED, LOW FRICTION SKF WIPER SEALS) 27 15X110 BOOST™ DIFFUSION BLACK - PIKE B1-B2/SELECT/SELECT+ B3 (2018-2020+)/REVELATION (35MM A1) (2018+)
1	11.4018.091.022	FORK LOWER LEG - (DECALS NOT INCLUDED, LOW FRICTION SKF WIPER SEALS) 29 15X110 BOOST™ BLACK - PIKE B1-B2/SELECT/SELECT+B3 (2018-2020+)/REVELATION (35MM A1) (2018+)
1	11.4018.091.026	FORK LOWER LEG - (DECALS NOT INCLUDED, LOW FRICTION SKF WIPER SEALS) 27 15X110 BOOST™ BLACK - PIKE B1-B2/SELECT/SELECT+B3 (2018-2020+)/REVELATION (35MM A1) (2018+)
	CSU	
2	11.4018.008.562	FORK CSU - DEBONAIR 29 BOOST™ 15X110 51 OFF-SET TAPER DIFFUSION BLACK (NO GRADIENTS) - PIKE B1-B2 (2018-2019). PIKE SELECT/SELECT+ (2020)
2	11.4018.008.565	FORK CSU - DEBONAIR 27 BOOST™ 15X110 46 OFF-SET TAPER DIFFUSION BLACK (NO GRADIENTS) - PIKE B1-B2 (2018-2019). PIKE SELECT/SELECT+ (2020)
2	11.4018.008.568	FORK CSU - DEBONAIR 29 BOOST™ 15X110 42 OFF-SET TAPER DIFFUSION BLACK (NO GRADIENTS) - PIKE B1-B2 (2018-2019). PIKE SELECT/SELECT+ (2020)
2	11.4018.008.571	FORK CSU - DEBONAIR 27 BOOST™ 15X110 37 OFF-SET TAPER DIFFUSION BLACK (NO GRADIENTS) - PIKE B1-B2 (2018-2019). PIKE SELECT/SELECT+ (2020)
2	11.4018.090.020	FORK CSU - DEBONAIR 27 BOOST™ 15X110 46 OFF-SET TAPER GLOSSBLACK (NO GRADIENTS) - PIKE B1-B2 (2018-2019). PIKE SELECT/SELECT+/ULTIMATE B3 (2020)
2	11.4018.090.021	FORK CSU - DEBONAIR 27 BOOST™ 15X110 37 OFF-SET TAPER GLOSSBLACK (NO GRADIENTS) - PIKE B1-B2 (2018-2019). PIKE SELECT/SELECT+/ULTIMATE B3 (2020)
2	11.4018.090.022	FORK CSU - DEBONAIR 29 BOOST™ 15X110 42 OFF-SET TAPER GLOSSBLACK (NO GRADIENTS) - PIKE B1-B2 (2018-2019). PIKE SELECT/SELECT+/ULTIMATE B3 (2020)
2	11.4018.090.023	FORK CSU - DEBONAIR 29 BOOST™ 15X110 51 OFF-SET TAPER GLOSSBLACK (NO GRADIENTS) - PIKE B1-B2 (2018-2019). PIKE SELECT/SELECT+/ULTIMATE B3 (2020)
	SPRING	
3	11.4018.083.000	FORK SPRING AIR TOP CAP - 35MM (.5MM THREAD PITCH) BOOST™ 15X110 (INCLUDES SPLINED TOP CAP & VALVE COVER) - LYRIK A1+/YARI A1+/PIKE B1+/REVELATION A1+(35MM)/BOXXER 35MM/ SID35MM
5	11.4018.032.000	FORK SPRING BOTTOMLESS TOKENS - 35MM/38MM SOLO AIR/DEBONAIR (QTY 3) - PIKE/BOXXER B1/LYRIK B1/YARI/SID 35MM/ZEB
5	11.4018.032.001	FORK SPRING BOTTOMLESS TOKENS - 35MM/38MM SOLO AIR/DEBONAIR (QTY 10) PIKE/BOXXER B1/LYRIK B1/YARI/SID 35MM/ZEB
	DAMPER	
6	11.4018.082.002	FORK COMPRESSION DAMPER KNOB KIT - CHARGER 2/2.1 RCT REMOTE - LYRIK RCTR B1 (2018+) /PIKE RCTR B1+ (2018+)/LYRIK RCTR ULTIMATE C2 (2020+)/PIKE RCTR ULTIMATE B3 (2020+)
7	11.4018.082.003	FORK COMPRESSION DAMPER KNOB KIT - CHARGER 2/2.1 RCT3 CROWN - LYRIK RCT3 B1 (2018+)/PIKE RCT3 B1+ (2018+)/LYRIK RCT3 ULTIMATE C2 (2020+)/PIKE RCT3 ULTIMATE B3 (2020+)
8	11.4018.082.005	FORK COMPRESSION DAMPER KNOB KIT - CHARGER 2/2.1 RC2 CROWN - LYRIK RC2 C1/ULTIMATE RC2 C2 (2019+)/PIKE RC2 ULTIMATE B3 (2020+)
9	11.4018.082.006	FORK COMPRESSION DAMPER KNOB KIT - CHRC CROWN- LYRIK RC SELECT+ C2 (2020+)/PIKE RC SELECT+ B3 (2020+)/BOXXER RC C1/RC SELECT C2 (2019+)
10	11.4018.082.004	FORK REBOUND DAMPER KNOB KIT - (INCLUDES ADJUSTER KNOB & BOLT) - CHARGER RC2/RCT2/RCT R - LYRIK, PIKE, BOXXER, ZEB
10	11.4015.404.028	FORK REBOUND DAMPER KNOB KIT - (INCLUDES ADJUSTER KNOB & BOLT) - CHARGER RC - LYRIK SELECT RC C2 (2020+), PIKE SELECT RC B3 (2020+), REVELATION RC A1-A2, YARI CHRC B1
11	11.4018.107.000	FORK DAMPER SEALHEAD ASSEMBLY - CHARGER 2.1 - LYRIK RCT3 B1+/RC C1+, PIKE RCT3 B1+/RC2 C1+, BOXXER RC2 C1+, LYRIK/PIKE/BOXXER SELECT/SELECT+/ULTIMATE (RC2/RCT3) C2+
bulk	11.4018.107.001	FORK DAMPER SEALHEAD ASSEMBLY - CHARGER 2.1 - LYRIK RCT3 B1+/RC C1+, PIKE RCT3 B1+/RC2 C1+, BOXXER RC2 C1+, LYRIK/PIKE/BOXXER SELECT/SELECT+/ULTIMATE (RC2/RCT3) C2 - BULK, QTY10
ns	11.4018.104.004	FORK DAMPER ASSEMBLY - REMOTE CHARGER2 RLC3 150-160MM 27.5/29 (INCLUDES DAMPER ASSEMBLY) - PIKE ULT B3 (2019) - SCOTT
	SPARES	
14	11.4015.403.040	FORK SHAFT FASTENER KIT - (INCLUDES SHAFT BOLTS & CRUSH WASHERS) - PIKE
15	11.4015.534.010	FORK HOSE CLAMP - PIKE/LYRIK/YARI/SID/REVELATION/BOXXER/XC30/30G/30S/RECON/SEKTOR/BLUTO/REBA/35G/35S
17	11.4018.028.005	FORK FOAM RING KIT - 35MM X 6MM (QTY 20) - PIKE/LYRIK B1/YARI/BOXXER/DOMAIN DUAL CROWN
bulk	11.4018.028.014	FORK DUST WIPER KIT - 35MM BLACK LOW FRICTION SKF (INCLUDES FLANGELESS DUST WIPERS) (QTY 20) - PIKE/LYRIK B1/YARI/BOXXER/DOMAIN/REVELATION 35MM/35G
18	00.4318.005.019	AXLE MAXLE STEALTH FRONT, 15X110, LENGTH 158MM, THREAD LENGTH 9MM, THREAD PITCH M15X1.50 - BOOST COMPATIBLE
	TOOLS/GREASE/FLUIDS	
ns	00.4318.032.000	FORK LOWER LEG DUST SEAL INSTALLATION TOOL 35MM (FOR FLANGELESS AND FLANGED DUST SEALS)
ns	00.4315.023.010	HIGH-PRESSURE FORK/SHOCK PUMP (300 PSI MAX) ROCKSHOX
ns	00.4315.023.040	HIGH-PRESSURE FORK/SHOCK PUMP (300 PSI MAX) ROCKSHOX DIGITALGAUGE
ns	00.4315.022.010	REAR SHOCK SCHRADER VALVE REMOVAL TOOL ROCKSHOX
ns	11.4315.021.080	ROCKSHOX SUSPENSION OIL, 0W-30, 120ML BOTTLE - PIKE/REVELATION 2018+/LYRIK B1/YARI/SID 2020+ LOWER LEGS
ns	11.4015.354.050	ROCKSHOX SUSPENSION OIL, 0-W30, 1 LITER BOTTLE - PIKE/REVELATION 2018+/LYRIK B1/YARI/SID 2020+ LOWER LEGS
ns	11.4115.094.030	MAXIMA SUSPENSION OIL PLUSH, 3WT 1 LITER BOTTLE - REAR SHOCK/CHARGER DAMPER
ns	00.4318.007.000	RockShox Charger Damper Standard Bleed Kit (includes Syringe, Charger1 fitting, Standard fitting, Suspension Oil 3w) - Charger/RaceDay dampers
ns	00.4318.008.002	GREASE ROCKSHOX DYNAMIC SEAL GREASE (PTFE) 1OZ - RECOMMENDED FOR SERVICING REAR SHOCKS & FORKS
ns	00.4318.008.004	GREASE ROCKSHOX DYNAMIC SEAL GREASE 500ML - RECOMMENDED FOR SERVICING REAR SHOCKS & FORKS

PIKE RCT3/RCT/RC B1-B2 (2018-2019)

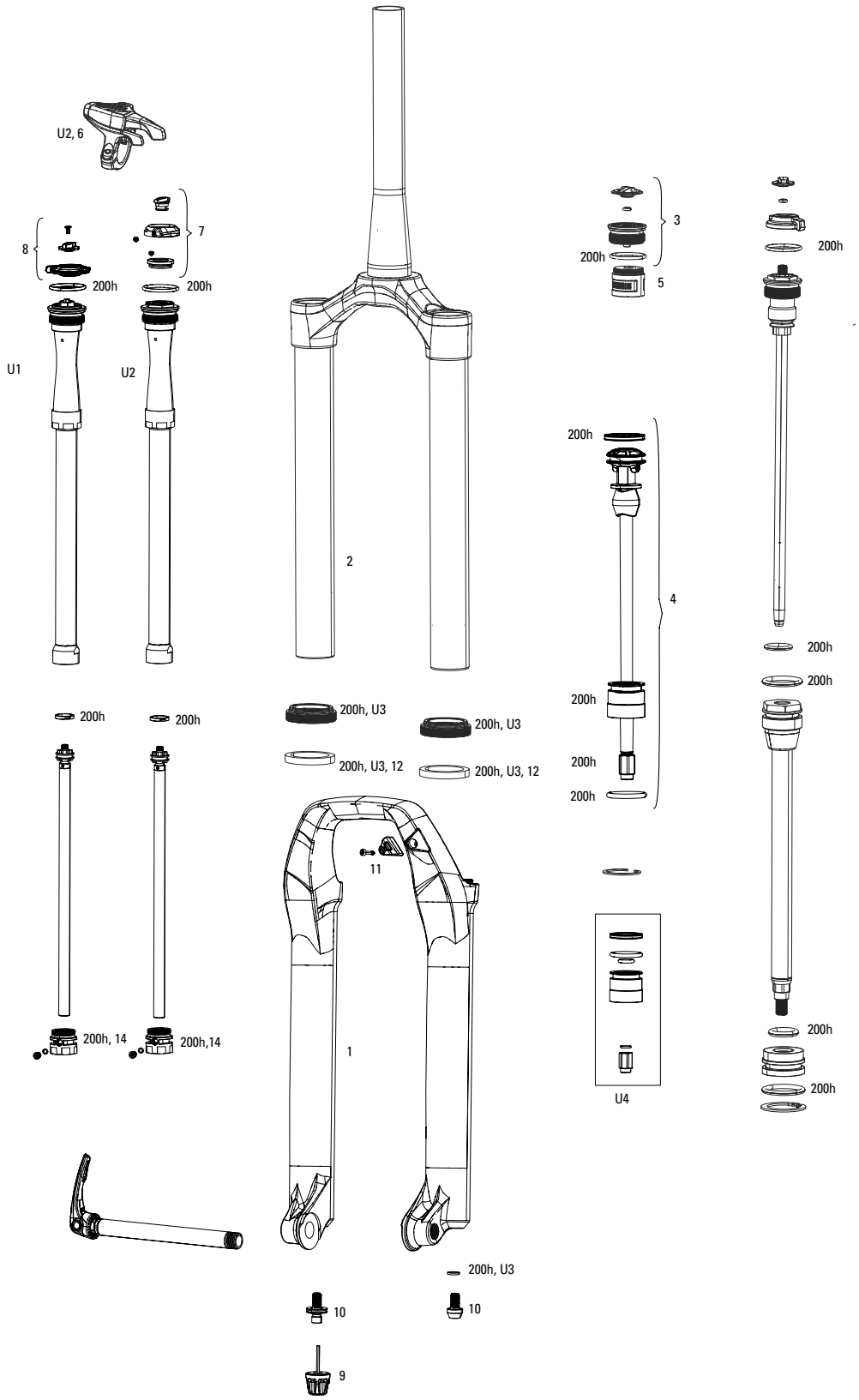

Note:
1. PIKE B1 charger and DebonAir Spring are not compatible with previous generations of PIKE
2. Lower Legs are compatibible wit Revelation 35mm and older gernerations of PIKE.
3. Decal and Maxle pages can be found in back of the catalog.

PIKE RCT3/RCT/RC B1-B2 (2018-2019)

	UPGRADE	
U1	00.4020.169.003	DAMPER UPGRADE KIT - CHARGER2.1 RCT3 CROWN (INCLUDES COMPLETE RIGHT SIDE INTERNALS) - PIKE 27.5"BOOST(A2/2017)/PIKE27.5"/29"(B1+/2018+)/REVELATION(A1+,35MM/2018+)
U2	00.4018.783.016	DAMPER UPGRADE KIT - CHARGER2 RCT REMOTE (INCLUDES COMPLETE RIGHT SIDE INTERNALS & ONELOCREMOTE) - PIKE 27.5"BOOST(A2/2017)/PIKE27.5"/29"(B1+/2018+)/ REVELATION(A1+,35MM/2018+)
U3	00.4318.045.004	FORK DUST WIPER UPGRADE KIT - 35MM BLACK FLANGELESS ULTRA-LOW FRICTION SKF SEALS (INCLUDES DUST WIPERS, 4MM & 6MM FOAM RINGS-PIKE/LYRIKB1/YARI/ REVELATION/BOXXER/DOMAIN/35/SID35MM
ns	00.4020.169.005	DAMPER UPGRADE KIT - CHARGER2.1 RC2 CROWN HIGH SPEED, LOW SPEED (INCLUDES RIGHT SIDE INTERNALS) - PIKE 27.5"BOOST(A2/2017)/PIKE27.5"/29"(B1+/2018+)/REVELATION(A1+,35MM/2018+)
U4	00.4020.573.000	SEAL HEAD UPGRADE KIT - DEBONAIR C1 35MM SEAL HEAD (INCLUDES SEAL HEAD & SPECIFIC NUT) - LYRIK RC C2+,RCT3 C1+(2019+)/YARI B1+/PIKE B2+/REVELATION A2+ (2019+)
4	00.4020.552.000	Air Spring Upgrade Kit - DebonAir C1 160mm (Includes DebonAir C1Assembly, seal head) - PIKE B1+/Revelation A1+ (2018+)
4	00.4020.552.001	Air Spring Upgrade Kit - DebonAir C1 150mm (Includes DebonAir C1Assembly, seal head) - PIKE B1+/Revelation A1+ (2018+)
4	00.4020.552.002	Air Spring Upgrade Kit - DebonAir C1 140mm (Includes DebonAir C1Assembly, seal head) - PIKE B1+/Revelation A1+ (2018+)
4	00.4020.552.003	Air Spring Upgrade Kit - DebonAir C1 130mm (Includes DebonAir C1Assembly, seal head) - PIKE B1+/Revelation A1+ (2018+)
4	00.4020.552.004	Air Spring Upgrade Kit - DebonAir C1 120mm (Includes DebonAir C1Assembly, seal head) - PIKE B1+/Revelation A1+ (2018+)
	SERVICE	
200h	00.4315.032.646	200 HOUR/1 YEAR SERVICE KIT (INCLUDES DUST SEALS, FOAM RINGS, O-RING SEALS, CHARGER 2 SEALHEAD,DEBONAIR SEALS) - PIKE B1 (2018)
200h	00.4315.032.647	200 HOUR/1 YEAR SERVICE KIT (INCLUDES DUST SEALS, FOAM RINGS, O-RING SEALS, CHARGER 2 SEALHEAD, DUAL POSITION SEALS) - PIKE B1 (2018+)
200h	00.4318.025.020	200 HOUR/1 YEAR SERVICE KIT (INCLUDES DUST SEALS, FOAM RINGS, O-RING SEALS, CHARGER 2 SEALHEAD, ALUMINUM DEBONAIR SEALHEAD) - LYRIK RC2 C1 (2019+)
200h	00.4315.032.645	200 HOUR/1 YEAR SERVICE KIT (INCLUDES DUST SEALS, FOAM RINGS, O-RING SEALS, CHARGER 2 SEALHEAD, DUAL POSITION SEALS) - LYRIK B1/PIKE 29+ (2018+)
	LOWER LEG	
1	11.4018.006.320	FORK LOWER LEG - (DECALS NOT INCLUDED) 27 15X110 BOOST™ BLACK - PIKE B1 (2018+)/REVELATION (35MM A1) (2018+)
1	11.4018.006.322	FORK LOWER LEG - (DECALS NOT INCLUDED) 27 15X110 BOOST™ DIFFUSION BLACK - PIKE B1-B2 (2018-2019), PIKE SELECT/SELECT+ B3 (2020+) /REVELATION (35MM A1) (2018+)
1	11.4018.006.323	FORK LOWER LEG - (DECALS NOT INCLUDED) 29 15X110 BOOST™ BLACK - PIKE B1 (2018+)/REVELATION (35MM A1) (2018+)
1	11.4018.006.325	FORK LOWER LEG - (DECALS NOT INCLUDED) 29 15X110 BOOST™ DIFFUSION BLACK - PIKE B1-B2 (2018-2019), PIKE SELECT/SELECT + B3 (2020+) /REVELATION (35MM A1) (2018+)
	CSU	
F	11.4018.008.560	FORK CSU - DEBONAIR 29 BOOST™ 15X110 51 OFF-SET TAPER BLACK (NO GRADIENTS) - PIKE B1 (2018+)
2	11.4018.008.562	FORK CSU - DEBONAIR 29 BOOST™ 15X110 51 OFF-SET TAPER DIFFUSION BLACK (NO GRADIENTS) - PIKE B1-B2 (2018-2019). PIKE SELECT/SELECT+ (2020)
2	11.4018.008.563	FORK CSU - DEBONAIR 27 BOOST™ 15X110 46 OFF-SET TAPER BLACK (NO GRADIENTS) - PIKE B1 (2018+)
2	11.4018.008.565	FORK CSU - DEBONAIR 27 BOOST™ 15X110 46 OFF-SET TAPER DIFFUSION BLACK (NO GRADIENTS) - PIKE B1-B2 (2018-2019). PIKE SELECT/SELECT+ (2020)
2	11.4018.008.566	FORK CSU - DEBONAIR 29 BOOST™ 15X110 42 OFF-SET TAPER BLACK (NO GRADIENTS) - PIKE B1 (2018+)
2	11.4018.008.568	FORK CSU - DEBONAIR 29 BOOST™ 15X110 42 OFF-SET TAPER DIFFUSION BLACK (NO GRADIENTS) - PIKE B1-B2 (2018-2019). PIKE SELECT/SELECT+ (2020)
2	11.4018.008.569	FORK CSU - DEBONAIR 27 BOOST™ 15X110 37 OFF-SET TAPER BLACK (NO GRADIENTS) - PIKE B1 (2018+)
2	11.4018.008.571	FORK CSU - DEBONAIR 27 BOOST™ 15X110 37 OFF-SET TAPER DIFFUSION BLACK (NO GRADIENTS) - PIKE B1-B2 (2018-2019). PIKE SELECT/SELECT+ (2020)
	SPRING	
3	11.4018.083.000	FORK SPRING AIR TOP CAP - 35MM (.5MM THREAD PITCH) BOOST™ 15X110 (INCLUDES SPLINED TOP CAP & VALVE COVER) - LYRIK A1+/YARI A1+/PIKE B1+/REVELATION A1+(35MM)/BOXXER 35MM/ SID35MM
5	11.4018.032.000	FORK SPRING BOTTOMLESS TOKENS - 35MM/38MM SOLO AIR/DEBONAIR (QTY 3) - PIKE/BOXXER B1/LYRIK B1/YARI/SID 35MM/ZEB
5	11.4018.032.001	FORK SPRING BOTTOMLESS TOKENS - 35MM/38MM SOLO AIR/DEBONAIR (QTY 10) PIKE/BOXXER B1/LYRIK B1/YARI/SID 35MM/ZEB
ns	11.4018.010.242	FORK SPRING DUAL POSITION AIR - 27.5/29 150 (INCLUDES TOP CAP, AIR PISTON, SHAFT BOLT) - PIKE B1 (2018+)
ns	11.4018.010.243	FORK SPRING DUAL POSITION AIR - 27.5/29 160 (INCLUDES TOP CAP, AIR PISTON, SHAFT BOLT) - PIKE B1 (2018+)
	11.4018.120.000	FORK SPRING DUAL POSITION AIR KNOB - REVELATION A1+/PIKE A1+/LYRIK A1+/YARI A1+/ZEB A1+
	DAMPER	
6	00.4318.002.009	REMOTE - ONELOC LEFT/ABOVE, RIGHT/BELOW 10MM, REMOTE ONLY (INCLUDES REMOTE, CABLE&HOUSING)-SID,REBA,REVELATION,BLUTO,SEKTOR,RECONGOLD(2013-2017)/JUDY
6	00.4318.002.010	REMOTE - ONELOC RIGHT/ABOVE, LEFT/BELOW 10MM, REMOTE ONLY (INCLUDES REMOTE, CABLE&HOUSING)-SID,REBA,REVELATION,BLUTO,SEKTOR,RECONGOLD(2013-2017)/JUDY
7	11.4018.082.002	FORK COMPRESSION DAMPER KNOB KIT - CHARGER 2/2.1 RCT REMOTE - LYRIK RCTR B1 (2018+) /PIKE RCTR B1+ (2018+)/LYRIK RCTR ULTIMATE C2 (2020+)/PIKE RCTR ULTIMATE B3 (2020+)
8	11.4018.082.003	FORK COMPRESSION DAMPER KNOB KIT - CHARGER 2/2.1 RCT3 CROWN - LYRIK RCT3 B1 (2018+)/PIKE RCT3 B1+ (2018+)/LYRIK RCT3 ULTIMATE C2 (2020+)/PIKE RCT3 ULTIMATE B3 (2020+)
8	11.4018.082.007	FORK COMPRESSION DAMPER KNOB KIT - CROWN CHARGER2 RC (INCLUDES KNOB & SCREW)- LYRIK C1 (2018-2019) /PIKE B1 (2018-2019)
9	11.4018.082.004	FORK REBOUND DAMPER KNOB KIT - (INCLUDES ADJUSTER KNOB & BOLT) - CHARGER RC2/RCT2/RCT R - LYRIK, PIKE, BOXXER, ZEB
14	11.4018.107.000	FORK DAMPER SEALHEAD ASSEMBLY - CHARGER 2.1 - LYRIK RCT3 B1+/RC C1+, PIKE RCT3 B1+/RC2 C1+, BOXXER RC2 C1+, LYRIK/PIKE/BOXXER SELECT/SELECT+/ULTIMATE (RC2/RCT3) C2+
14	11.4018.107.001	FORK DAMPER SEALHEAD ASSEMBLY - CHARGER 2.1 - LYRIK RCT3 B1+/RC C1+, PIKE RCT3 B1+/RC2 C1+, BOXXER RC2 C1+, LYRIK/PIKE/BOXXER SELECT/SELECT+/ULTIMATE (RC2/RCT3) C2 - BULK, QTY10
	SPARES	
10	11.4015.403.040	FORK SHAFT FASTENER KIT - (INCLUDES SHAFT BOLTS & CRUSH WASHERS) - PIKE
11	11.4015.534.010	FORK HOSE CLAMP - PIKE/LYRIK/YARI/SID/REVELATION/BOXXER/XC30/30G/30S/RECON/SEKTOR/BLUTO/REBA/35G/35S
12	11.4018.028.005	FORK FOAM RING KIT - 35MM X 6MM (QTY 20) - PIKE/LYRIK B1/YARI/BOXXER/DOMAIN DUAL CROWN
	TOOLS/GREASE/FLUIDS	
ns	00.4318.032.000	FORK LOWER LEG DUST SEAL INSTALLATION TOOL 35MM (FOR FLANGELESS AND FLANGED DUST SEALS)
ns	00.4315.023.010	HIGH-PRESSURE FORK/SHOCK PUMP (300 PSI MAX) ROCKSHOX
ns	00.4315.023.040	HIGH-PRESSURE FORK/SHOCK PUMP (300 PSI MAX) ROCKSHOX DIGITALGAUGE
ns	00.4315.022.010	REAR SHOCK SCHRADER VALVE REMOVAL TOOL ROCKSHOX
ns	11.4315.021.080	ROCKSHOX SUSPENSION OIL, 0W-30, 120ML BOTTLE - PIKE/REVELATION 2018+/LYRIK B1/YARI/SID 2020+ LOWER LEGS
ns	11.4015.354.050	ROCKSHOX SUSPENSION OIL, 0-W30, 1 LITER BOTTLE - PIKE/REVELATION 2018+/LYRIK B1/YARI/SID 2020+ LOWER LEGS
ns	11.4115.094.030	MAXIMA SUSPENSION OIL PLUSH, 3WT 1 LITER BOTTLE - REAR SHOCK/CHARGER DAMPER
ns	00.4318.007.000	RockShox Charger Damper Standard Bleed Kit (includes Syringe, Charger1 fitting, Standard fitting, Suspension Oil 3w) - Charger/RaceDay dampers
ns	00.4318.008.000	GREASE SRAM BUTTER 20ML SYRINGE, FRICTION REDUCING GREASE BYSLICKOLEUM - DOUBLE TIME HUB PAWLS, FORKS & REVERB SERVICE
ns	00.4318.008.001	GREASE SRAM BUTTER 1OZ CONTAINER, FRICTION REDUCING GREASE BY SLICKOLEUM - DOUBLE TIME HUB PAWLS, FORKS & REVERB SERVICE

PIKE A1-A3 (2014-2017)

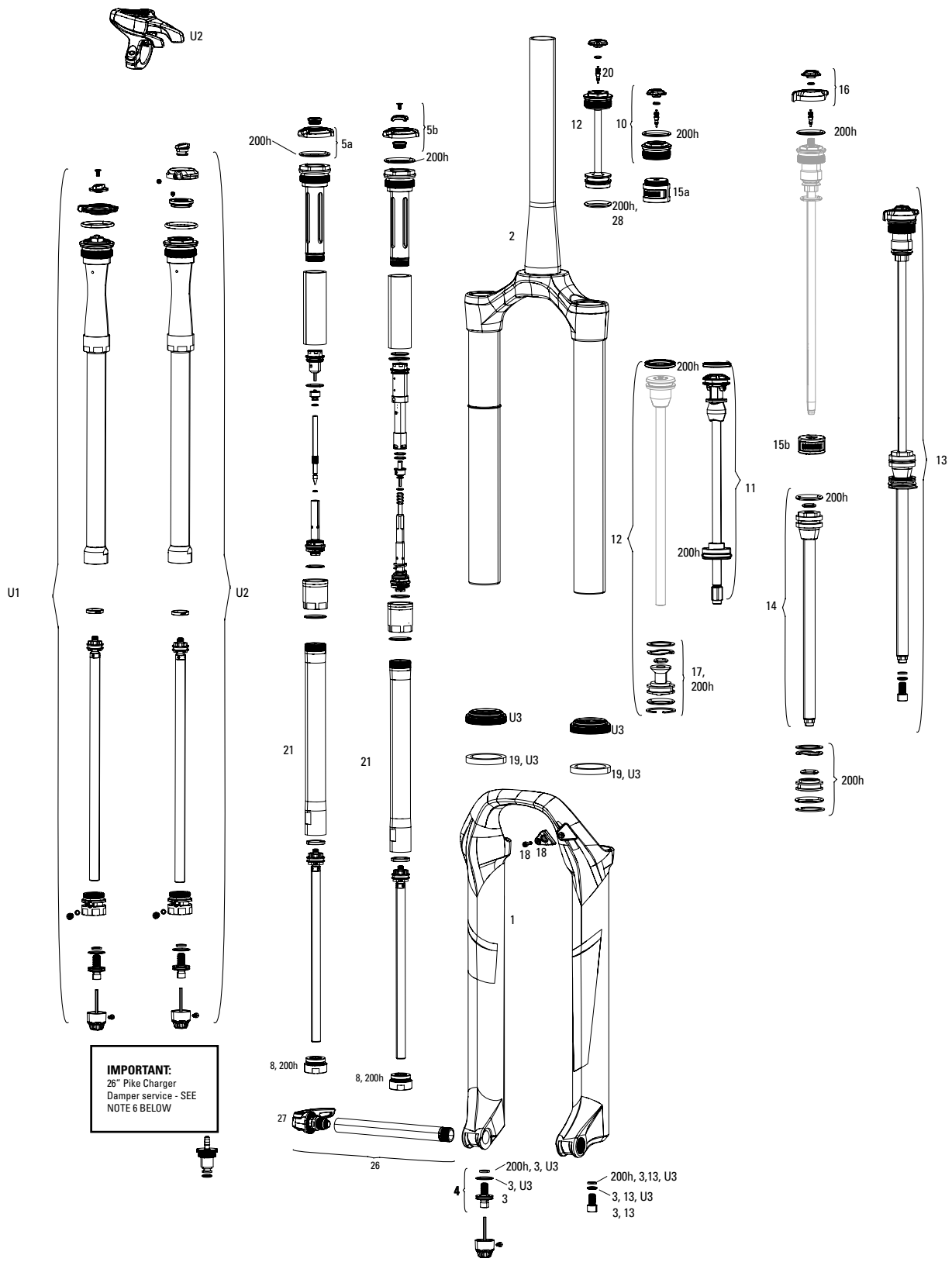

Note:

1. Charger damper fluid -use RockShox Rear Suspension Damping Fluid 3wt.
2. Charger lower leg lubricant - use RockShox Pike Suspension Oil, 0w-30.
3. Charger damper bleed - use Bleed fitting Charger Damper and RockShox Charger Damper Standard Bleed Kit.
4. For Travel Change and Bottomless Token options, see the respective pages in this catalog, listed in the Index.
5. Pike Solo Air CSU's do not come with gradients printed on the stanchion tubes.
6. I**MPORTANT:** When servicing 26" variants of Pike and moving to the new, upgraded seal head (contained in all Full Service Kits) for the first time, you must change the damper tube to 11.4018.063.000. The new damper tube will have a turned indicator mark on the lower section of the damper tube, see the Pike Service Manual for details. If your damper tube does not have this indicator mark, you must purchase the new damper tube to use the new, upgraded seal head.
7. A complete decal and maxle overview can be found in back of the catalog.

PIKE A1-A3 (2014-2017)

	UPGRADE	
U1	00.4020.169.000	DAMPER UPGRADE KIT - CHARGER2.1 RCT3 CROWN (INCLUDES COMPLETE RIGHT SIDE INTERNALS) - PIKE 15X100 26"(A1-A2/2014-2017)
U1	00.4020.169.001	DAMPER UPGRADE KIT - CHARGER2.1 RCT3 CROWN (INCLUDES COMPLETE RIGHT SIDE INTERNALS) - PIKE 15X100 27.5"(A1-A2/2014-2017)
U1	00.4020.169.002	DAMPER UPGRADE KIT - CHARGER2.1 RCT3 CROWN (INCLUDES COMPLETE RIGHT SIDE INTERNALS) - PIKE 15X100 29"(A1-A2/2014-2017)
U2	00.4018.783.013	DAMPER UPGRADE KIT - CHARGER2 RCT REMOTE (INCLUDES COMPLETERIGHT SIDE INTERNALS & ONELOC REMOTE) - PIKE 15X100 27"(A1-A2/2014-2017)
U2	00.4018.783.014	DAMPER UPGRADE KIT - CHARGER2 RCT REMOTE (INCLUDES COMPLETERIGHT SIDE INTERNALS & ONELOC REMOTE) - PIKE 15X100 29"(A1-A2/2014-2017)
U3	00.4318.045.004	FORK DUST WIPER UPGRADE KIT - 35MM BLACK FLANGELESS ULTRA-LOW FRICTION SKF SEALS (INCLUDES DUST WIPERS, 4MM & 6MM FOAM RINGS-PIKE/LYRIKB1/YARI/REVELATION/BOXXER/DOMAIN/35/SID35MM
11	00.4019.931.005	Air Spring Upgrade Kit - DebonAir (Includes DebonAir Assembly, seal head) - PIKE (A1-A2/2014-2017) 160mm-29"
11	00.4019.931.006	AIR SPRING UPGRADE KIT - DEBONAIR (INCLUDES DEBONAIR ASSEMBLY, SEAL HEAD) - PIKE (A1-A2/2014-2017) 150MM-29"
11	00.4019.931.007	Air Spring Upgrade Kit - DebonAir (Includes DebonAir Assembly, seal head) - PIKE (A1-A2/2014-2017) 140mm-29", 160mm-27.5"
11	00.4019.931.008	Air Spring Upgrade Kit - DebonAir (Includes DebonAir Assembly, seal head) - PIKE (A1-A2/2014-2017) 130mm-29", 150mm-27.5", 160mm-26"
11	00.4019.931.009	Air Spring Upgrade Kit - DebonAir (Includes DebonAir Assembly, seal head) - PIKE (A1-A2/2014-2017) 120mm-29", 140mm-27.5" 150mm-26"
11	00.4019.931.010	Air Spring Upgrade Kit - DebonAir (Includes DebonAir Assembly, seal head) - PIKE (A1-A2/2014-2017) 130mm-27.5", 140mm-26"
11	00.4019.931.011	Air Spring Upgrade Kit - DebonAir (Includes DebonAir Assembly, seal head) - PIKE (A1-A2/2014-2017) 120mm-27.5", 130mm-26"
11	00.4019.931.012	Air Spring Upgrade Kit - DebonAir (Includes DebonAir Assembly, seal head) - PIKE (A1-A2/2014-2017) 120mm-26"
	SERVICE	
200h	00.4315.032.618	200 HOUR/1 YEAR SERVICE KIT (INCLUDES DUST SEALS, FOAM RINGS, O-RING SEALS, CHARGER SEALHEAD, DPA SEALHEAD) - PIKE DUALPOSITION AIR A1
200h	00.4315.032.619	200 HOUR/1 YEAR SERVICE KIT (INCLUDES DUST SEALS, FOAM RINGS, O-RING SEALS, CHARGER SEALHEAD, SA SEALHEAD) - PIKE/PIKE DJ SOLO AIR A1
	LOWER LEG	
1	11.4018.006.190	FORK LOWER LEG - (DECALS NOT INCLUDED) 26 15X100 BLACK - PIKE A1-A2 (2014-2017), PIKE DJ A2-A3 (2016+)
1	11.4018.006.192	FORK LOWER LEG - (DECALS NOT INCLUDED) 26 15X100 DIFFUSION BLACK - PIKE A1-A2 (2014-2017), PIKE DJ A2-A3 (2016+)
1	11.4018.006.193	FORK LOWER LEG - (DECALS NOT INCLUDED) 27 15X100 BLACK - PIKE A1-A2 (2014-2017)
1	11.4018.006.195	FORK LOWER LEG - (DECALS NOT INCLUDED) 27 15X100 DIFFUSION BLACK - PIKE A1-A2 (2014-2017)
1	11.4018.006.196	FORK LOWER LEG - (DECALS NOT INCLUDED) 29 15X100 BLACK - PIKE A1-A2 (2014-2017)
1	11.4018.006.198	FORK LOWER LEG - (DECALS NOT INCLUDED) 29 15X100 DIFFUSION BLACK - PIKE A1-A2 (2014-2017)
1	11.4018.006.234	FORK LOWER LEG - (DECALS NOT INCLUDED) 29 15X110 BOOST™ BLACK - PIKE A2 (2017)
	CSU	
2	11.4018.008.414	FORK CSU - SOLO AIR 26 40 OFF-SET ALUMINUM TAPER BLACK (NO GRADIENTS) - PIKE A1-A2 (2014-2017)
2	11.4018.008.416	FORK CSU - SOLO AIR 26 40 OFF-SET ALUMINUM TAPER DIFFUSION BLACK (NO GRADIENTS) - PIKE A1-A2 (2014-2017)
2	11.4018.008.417	FORK CSU - SOLO AIR 27.5 42 OFF SET ALUMINUM TAPER BLACK (NO GRADIENTS) - PIKE A1-A2 (2014-2017)
2	11.4018.008.419	FORK CSU - SOLO AIR 27.5 42 OFF SET ALUMINUM TAPER DIFFUSION BLACK (NO GRADIENTS) - PIKE A1-A2 (2014-2017)
2	11.4018.008.317	FORK CSU - DUAL POSITION AIR 27.5 42 OFF-SET ALUMINUM TAPER BLACK - PIKE A1-A2 (2014-2017)
2	11.4018.008.319	FORK CSU - DUAL POSITION AIR 27.5 42 OFF-SET ALUMINUM TAPER DIFFUSION BLACK - PIKE A1-A2 (2014-2017)
2	11.4018.008.420	FORK CSU - SOLO AIR 27.5/29 46OFF-SET ALUMINUM TAPER BLACK (NO GRADIENTS) - PIKE A1-A2 (2014-2017)
2	11.4018.008.422	FORK CSU - SOLO AIR 27.5/29 46OFF-SET ALUMINUM TAPER DIFFUSION BLACK (NO GRADIENTS) - PIKE A1-A2 (2014-2017)
2	11.4018.008.323	FORK CSU - DUAL POSITION AIR 27.5/29 46 OFF-SET ALUMINUM TAPER BLACK - PIKE A1-A2 (2014-2017)
2	11.4018.008.325	FORK CSU - DUAL POSITION AIR 27.5/29 46 OFF-SET ALUMINUM TAPER DIFFUSION BLACK - PIKE A1-A2 (2014-2017)
2	11.4018.008.423	FORK CSU - SOLO AIR 29 51 OFF-SET ALUMINUM TAPER BLACK (NO GRADIENTS) - PIKE A1-A2 (2014-2017)
2	11.4018.008.425	FORK CSU - SOLO AIR 29 51 OFF-SET ALUMINUM TAPER DIFFUSION BLACK (NO GRADIENTS) - PIKE A1-A2 (2014-2017)
ns	11.4018.008.311	FORK CSU - DUAL POSITION AIR 26 40 OFF-SET ALUMINUM TAPER BLACK - PIKE A1-A2 (2014-2017)
ns	11.4018.008.329	FORK CSU - DUAL POSITION AIR 29 51 OFF-SET ALUMINUM TAPER BLACK - PIKE A1-A2 (2014-2017)
ns	11.4018.008.429	FORK CSU - DUAL POSITION AIR 2927+ BOOST™ COMPATIBLE 15X110 51 OFF-SET ALUMINUM TAPER BLACK(NO GRADIENTS) - PIKE A1-A2 (2014-2017)
ns	11.4018.008.431	FORK CSU - DUAL POSITION AIR 2927+ BOOST™ COMPATIBLE 15X110 51 OFF-SET ALUMINUM TAPER DIFFUSION BLACK (NO GRADIENTS) - PIKE A1-A2 (2014-2017)
ns	11.4018.008.435	FORK CSU - DUAL POSITION AIR 27.5 BOOST™ COMPATIBLE 15X110 42 OFF-SET ALUMINUM TAPER BLACK(NO GRADIENTS) - PIKE A1-A2 (2014-2017)
	DAMPER	
3	11.4015.403.040	FORK SHAFT FASTENER KIT - (INCLUDES SHAFT BOLTS & CRUSH WASHERS) - PIKE
4	11.4018.082.004	FORK REBOUND DAMPER KNOB KIT - (INCLUDES ADJUSTER KNOB & BOLT) - CHARGER RC2/RCT2/RCT R - LYRIK, PIKE, BOXXER, ZEB
5a	11.4015.547.080	FORK COMPRESSION DAMPER KNOB KIT - CROWN CHARGER RC (INCLUDES KNOB & SCREW) - LYRIK B1/PIKE/PIKE DJ A2-A3 (2017+)
5b	11.4015.547.090	FORK COMPRESSION DAMPER KNOB KIT - CROWN CHARGER RCT3 (INCLUDES KNOB & SCREW) - LYRIK B1/PIKE
ns	11.4018.009.067	FORK DAMPER ASSEMBLY - CROWN CHARGER RC 100MM (INCLUDES RIGHT SIDE INTERNALS) - PIKE DJ
ns	11.4018.009.068	FORK DAMPER ASSEMBLY - CROWN CHARGER RC 140MM (INCLUDES RIGHT SIDE INTERNALS) - PIKE DJ
8	11.4015.353.030	FORK DAMPER SEALHEAD ASSEMBLY - CHARGER 1, LYRIK RCT3 A1/RC B1, PIKE A1-A2 35MM
	SPRING	
10	11.4018.012.004	FORK SPRING AIR TOP CAP - 35MM (1.0MM THREAD PITCH) - PIKE A1-A2 (2014-2017)/BOXXER B1 (2015-2018)
12	11.4018.010.146	FORK SPRING SOLO AIR ASSEMBLY - 100MM (INCLUDES DJ TOP CAP, AIR PISTON, SHAFT BOLT) - PIKE DJ A2+ (2016+)
13	11.4018.010.114	FORK SPRING DUAL POSITION AIR - 160MM-26, 150MM-27.5 (INCLUDES AIR TOP CAP, ADJUSTER KNOB, DUAL SPRING ASSEMBLY & SHAFT BOLT) - PIKE A1-A2 (2014- 2017)
13	11.4018.010.115	FORK SPRING DUAL POSITION AIR - 160MM-27.5(INCLUDES AIR TOP CAP, ADJUSTER KNOB, DUAL SPRING ASSEMBLY & SHAFT BOLT) - PIKE A1-A2 (2014- 2017)
13	11.4018.010.116	FORK SPRING DUAL POSITION AIR - 150MM-29 (INCLUDES AIR TOP CAP, ADJUSTER KNOB, DUAL SPRING ASSEMBLY & SHAFT BOLT) - PIKE A1-A2 (2014- 2017)
13	11.4018.010.117	FORK SPRING DUAL POSITION AIR - 160MM-29 (INCLUDES AIR TOP CAP, ADJUSTER KNOB, DUAL SPRING ASSEMBLY & SHAFT BOLT) - PIKE A1-A2 (2014- 2017)
14	11.4018.026.005	FORK SPRING DUAL POSITION AIR SHAFT - 160MM-26, 150MM-27.5, 150MM-29+, 150MM - PIKE A1-A2 (2014-2017)/YARI A1+/LYRIK B1+
14	11.4018.026.008	FORK SPRING DUAL POSITION AIR SHAFT - 150MM-26 - PIKE A1-A2 (2014-2017)
14	11.4018.026.006	FORK SPRING DUAL POSITION AIR SHAFT - 160MM-27.5, 160MM-29+, 160MM- PIKE A1-A2 (2014-2017)/YARI A1+/LYRIK B1+
14	11.4018.026.007	FORK SPRING DUAL POSITION AIR SHAFT - 160MM-29, 180MM-29+, 180MM-LYRIK/YARI -PIKE A1-A2 (2014-2017)/YARI A1+/LYRIK B1+
14	11.4018.026.009	FORK SPRING DUAL POSITION AIR SHAFT - 150MM-29, 170MM-29+, 170MM- PIKE A1-A2 (2014-2017)/YARI A1+/LYRIK B1+
15a	11.4018.032.001	FORK SPRING BOTTOMLESS TOKENS - 35MM/38MM SOLO AIR/DEBONAIR (QTY 10) PIKE/BOXXER B1/LYRIK B1/YARI/SID 35MM/ZEB
15b	11.4018.032.004	FORK SPRING BOTTOMLESS TOKENS - 35MM/38MM DUAL POSITION AIR (QTY 3) - PIKE A1-A2/LYRIK B1+/YARI A1+/ZEB
15b	11.4018.032.005	FORK SPRING BOTTOMLESS TOKENS - 35MM/38MM DUAL POSITION AIR (QTY 10) - PIKE A1-A2/LYRIK B1+/YARI A1+/ZEB
16	11.4018.120.000	FORK SPRING DUAL POSITION AIR KNOB - REVELATION A1+/PIKE A1+/LYRIK A1+/YARI A1+/ZEB A1+
17	11.4018.037.000	FORK SPRING SEALHEAD - 35mm SOLO AIR (INCLUDES SEALHEAD BACKUP RING, WAVE WASHER & SEALS) - PIKE A1-A2 (2014-2017)/PIKE DJ A2-A3

PIKE A1-A3 (2014-2017)

	SPARES	
18	11.4015.534.010	FORK HOSE CLAMP - PIKE/LYRIK/YARI/SID/REVELATION/BOXXER/XC30/30G/30S/RECON/SEKTOR/BLUTO/REBA/35G/35S
19	11.4018.028.005	FORK FOAM RING KIT - 35MM X 6MM (QTY 20) - PIKE/LYRIK B1/YARI/BOXXER/DOMAIN DUAL CROWN
20	11.4308.327.002	AIR VALVE KIT - SCHRADER CORE (QTY 2) - FORKS/SHOCKS/REVERB
21	11.4018.063.000	FORK DAMPER TUBE - CHARGER (NEW VERSION WITH TURNED INDICATOR MARK) PIKE A1-A2 (2014-2017)
bulk	11.4015.259.000	FORK CRUSH WASHERS - 8MM (QTY 50)
bulk	11.4015.260.000	FORK CRUSH WASHER RETAINER - 8MM (QTY 50)
ns	11.4318.003.438	FORK DECAL KIT - PIKE 26/27.5/29 WHITE/DIFFUSION BLACK LOWER LEG
	TOOLS/GREASE/FLUIDS	
ns	00.4318.032.000	FORK LOWER LEG DUST SEAL INSTALLATION TOOL 35MM (FOR FLANGELESS AND FLANGED DUST SEALS)
ns	11.4318.010.000	FORK BLEED KIT - CHARGER 1 DAMPER FITTING (FOR BLEEDING CHARGER 1 DAMPERS) - BOXXER 35MM B1-B2 (2015-2018)/PIKE A1-A2 (2014-2017)/LYRIK RCT3 A1, RC B1 (2016-2017)
ns	00.4318.007.000	ROCKSHOX CHARGER DAMPER STANDARD BLEED KIT (INCLUDES 1 SYRINGE, CHARGER BLEED FITTING, SUSPENSION OIL 3W)
ns	00.4315.023.010	HIGH-PRESSURE FORK/SHOCK PUMP (300 PSI MAX) ROCKSHOX
ns	00.4315.023.040	HIGH-PRESSURE FORK/SHOCK PUMP (300 PSI MAX) ROCKSHOX DIGITALGAUGE
ns	00.4315.022.010	REAR SHOCK SCHRADER VALVE REMOVAL TOOL ROCKSHOX
ns	11.4315.021.080	ROCKSHOX SUSPENSION OIL, 0W-30, 120ML BOTTLE - PIKE/REVELATION 2018+/LYRIK B1/YARI/SID 2020+ LOWER LEGS
ns	11.4015.354.050	ROCKSHOX SUSPENSION OIL, 0-W30, 1 LITER BOTTLE - PIKE/REVELATION 2018+/LYRIK B1/YARI/SID 2020+ LOWER LEGS
ns	11.4115.094.030	MAXIMA SUSPENSION OIL PLUSH, 3WT 1 LITER BOTTLE - REAR SHOCK/CHARGER DAMPER
ns	00.4318.008.000	GREASE SRAM BUTTER 20ML SYRINGE, FRICTION REDUCING GREASE BYSLICKOLEUM - DOUBLE TIME HUB PAWLS, FORKS & REVERB SERVICE
ns	00.4318.008.001	GREASE SRAM BUTTER 1OZ CONTAINER, FRICTION REDUCING GREASE BY SLICKOLEUM - DOUBLE TIME HUB PAWLS, FORKS & REVERB SERVICE

PIKE BOOST 15X110 A2 (2017)

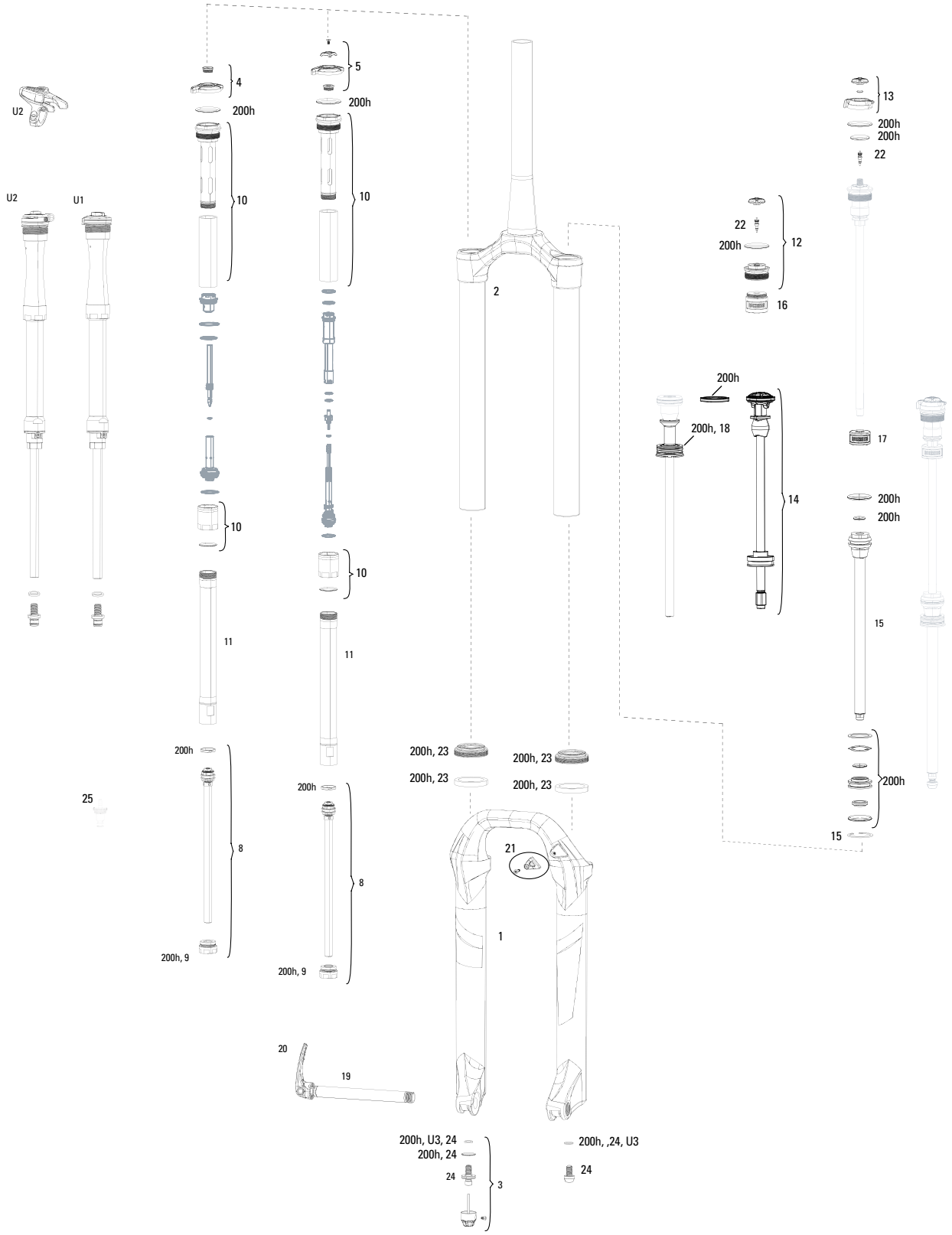

Note:

1. 200 Hour Service kits include replaceable o-rings, glide rings, retaining rings, crush washers, crush washer retainers and wiper seals. All air service kits include replacement schrader valve cores. All basic service kits include the following replaceable wear items: o-rings, glide rings, dust seals, and foam rings.
2. Charger damper fluid -use RockShox Rear Suspension Damping Fluid 3wt.
3. Charger lower leg lubricant - use RockShox Pike Suspension Oil, 0w-30.
4. Charger damper bleed - use Bleed fitting Charger Damper and RockShox Charger Damper Standard Bleed Kit.
5. For Travel Change and Bottomless Token options, see the respective pages in this catalog, listed in the Index.
6. Pike Solo Air CSU's do not come with gradients printed on the stanchion tubes.
7. Pike Boost Compatible threading for the top cap of the Charger Damper and Air Top Cap is specific to the Boost Compatible chassis.
8. A complete decal and maxle overview can be found in back of the catalog.

PIKE BOOST 15X110 A2 (2017)

	UPGRADE	
U1	00.4018.783.016	DAMPER UPGRADE KIT - CHARGER2 RCT REMOTE (INCLUDES COMPLETE RIGHT SIDE INTERNALS & ONELOCREMOTE) - PIKE 27.5"BOOST(A2/2017)/PIKE27.5"/29"(B1+/2018+)/ REVELATION(A1+,35MM/2018+)
U1	00.4018.783.018	DAMPER UPGRADE KIT - CHARGER2 RCT REMOTE (INCLUDES COMPLETERIGHT SIDE INTERNALS & ONELOC REMOTE) - PIKE 29"BOOST 15X110(A1-A2/2014-2017)
U2	00.4020.169.003	DAMPER UPGRADE KIT - CHARGER2.1 RCT3 CROWN (INCLUDES COMPLETE RIGHT SIDE INTERNALS) - PIKE 27.5"BOOST(A2/2017)/PIKE27.5"/29"(B1+/2018+)/REVELATION(A1+,35MM/2018+)
U2	00.4020.169.004	DAMPER UPGRADE KIT - CHARGER2.1 RCT3 CROWN (INCLUDES COMPLETE RIGHT SIDE INTERNALS) - PIKE 29"BOOST 15X110 (A1-A2/2014-2017)
U3	00.4318.045.004	FORK DUST WIPER UPGRADE KIT - 35MM BLACK FLANGELESS ULTRA-LOW FRICTION SKF SEALS (INCLUDES DUST WIPERS, 4MM & 6MM FOAM RINGS-PIKE/LYRIKB1/YARI/REVELATION/BOXXER/DO MAIN/35/SID35MM
14	00.4019.931.005	Air Spring Upgrade Kit - DebonAir (Includes DebonAir Assembly, seal head) - PIKE (A1-A2/2014-2017) 160mm-29"
14	00.4019.931.006	AIR SPRING UPGRADE KIT - DEBONAIR (INCLUDES DEBONAIR ASSEMBLY, SEAL HEAD) - PIKE (A1-A2/2014-2017) 150MM-29"
14	00.4019.931.007	Air Spring Upgrade Kit - DebonAir (Includes DebonAir Assembly, seal head) - PIKE (A1-A2/2014-2017) 140mm-29", 160mm-27.5"
14	00.4019.931.008	Air Spring Upgrade Kit - DebonAir (Includes DebonAir Assembly, seal head) - PIKE (A1-A2/2014-2017) 130mm-29", 150mm-27.5", 160mm-26"
14	00.4019.931.009	Air Spring Upgrade Kit - DebonAir (Includes DebonAir Assembly, seal head) - PIKE (A1-A2/2014-2017) 120mm-29", 140mm-27.5" 150mm-26"
14	00.4019.931.010	Air Spring Upgrade Kit - DebonAir (Includes DebonAir Assembly, seal head) - PIKE (A1-A2/2014-2017) 130mm-27.5", 140mm-26"
14	00.4019.931.011	Air Spring Upgrade Kit - DebonAir (Includes DebonAir Assembly, seal head) - PIKE (A1-A2/2014-2017) 120mm-27.5", 130mm-26"
14	00.4019.931.012	Air Spring Upgrade Kit - DebonAir (Includes DebonAir Assembly, seal head) - PIKE (A1-A2/2014-2017) 120mm-26"
	SERVICE	
200h	00.4315.032.618	200 HOUR/1 YEAR SERVICE KIT (INCLUDES DUST SEALS, FOAM RINGS, O-RING SEALS, CHARGER SEALHEAD, DPA SEALHEAD) - PIKE DUALPOSITION AIR A1
200h	00.4315.032.619	200 HOUR/1 YEAR SERVICE KIT (INCLUDES DUST SEALS, FOAM RINGS, O-RING SEALS, CHARGER SEALHEAD, SA SEALHEAD) - PIKE/PIKE DJ SOLO AIR A1
	LOWER LEG	
1	11.4018.006.236	FORK LOWER LEG - (DECALS NOT INCLUDED) 29 15X110 BOOST™ DIFFUSION BLACK - PIKE A2 (2017)
	CSU	
2	11.4018.008.432	FORK CSU - SOLO AIR 27.5 BOOST™ COMPATIBLE 15X110 42 OFF-SET ALUMINUM TAPER BLACK (NO GRADIENTS) - PIKE A1-A2 (2014-2017)
2	11.4018.008.434	FORK CSU - SOLO AIR 27.5 BOOST™ COMPATIBLE 15X110 42 OFF-SET ALUMINUM TAPER DIFFUSION BLACK(NO GRADIENTS) - PIKE A1-A2 (2014-2017)
2	11.4018.008.437	FORK CSU - DUAL POSITION AIR 27.5 BOOST™ COMPATIBLE 15X110 42 OFF-SET ALUMINUM TAPER DIFFUSION BLACK (NO GRADIENTS) - PIKE A1-A2 (2014-2017)
2	11.4018.008.426	FORK CSU - SOLO AIR 2927+ BOOST™ COMPATIBLE 15X110 51 OFF-SET ALUMINUM TAPER BLACK (NO GRADIENTS) - PIKE A1-A2 (2014-2017)
2	11.4018.008.428	FORK CSU - SOLO AIR 2927+ BOOST™ COMPATIBLE 15X110 51 OFF-SET ALUMINUM TAPER DIFFUSION BLACK (NO GRADIENTS) - PIKE A1-A2 (2014-2017)
	DAMPER	
3	11.4018.082.004	FORK REBOUND DAMPER KNOB KIT - (INCLUDES ADJUSTER KNOB & BOLT) - CHARGER RC2/RCT2/RCT R - LYRIK, PIKE, BOXXER, ZEB
4	11.4015.547.080	FORK COMPRESSION DAMPER KNOB KIT - CROWN CHARGER RC (INCLUDES KNOB & SCREW) - LYRIK B1/PIKE/PIKE DJ A2-A3 (2017+)
5	11.4015.547.090	FORK COMPRESSION DAMPER KNOB KIT - CROWN CHARGER RCT3 (INCLUDES KNOB & SCREW) - LYRIK B1/PIKE
9	11.4015.353.030	FORK DAMPER SEALHEAD ASSEMBLY - CHARGER 1, LYRIK RCT3 A1/RC B1, PIKE A1-A2 35MM
10	11.4018.031.000	FORK DAMPER CHARGER BLADDER ASSEMBLY - PIKE A1-A2 (2014-2017)
11	11.4018.063.000	FORK DAMPER TUBE - CHARGER (NEW VERSION WITH TURNED INDICATOR MARK) PIKE A1-A2 (2014-2017)
	SPRING	
12	11.4018.012.010	FORK SPRING AIR TOP CAP - 35MM (.5MM THREAD PITCH) BOOST™ 15X110 - PIKE A2/LYRIK A1+/YARI A1+/REVELATION A1+(2018+)/PIKE DJ (2017+)
13	11.4018.120.000	FORK SPRING DUAL POSITION AIR KNOB - REVELATION A1+/PIKE A1+/LYRIK A1+/YARI A1+/ZEB A1+
15	11.4018.026.005	FORK SPRING DUAL POSITION AIR SHAFT - 160MM-26, 150MM-27.5, 150MM-29+, 150MM - PIKE A1-A2 (2014-2017)/YARI A1+/LYRIK B1+
15	11.4018.026.006	FORK SPRING DUAL POSITION AIR SHAFT - 160MM-27.5, 160MM-29+, 160MM- PIKE A1-A2 (2014-2017)/YARI A1+/LYRIK B1+
15	11.4018.026.009	FORK SPRING DUAL POSITION AIR SHAFT - 150MM-29, 170MM-29+, 170MM- PIKE A1-A2 (2014-2017)/YARI A1+/LYRIK B1+
15	11.4018.026.007	FORK SPRING DUAL POSITION AIR SHAFT - 160MM-29, 180MM-29+, 180MM-LYRIK/YARI -PIKE A1-A2 (2014-2017)/YARI A1+/LYRIK B1+
16	11.4018.032.000	FORK SPRING BOTTOMLESS TOKENS - 35MM/38MM SOLO AIR/DEBONAIR (QTY 3) - PIKE/BOXXER B1/LYRIK B1/YARI/SID 35MM/ZEB
16	11.4018.032.001	FORK SPRING BOTTOMLESS TOKENS - 35MM/38MM SOLO AIR/DEBONAIR (QTY 10) PIKE/BOXXER B1/LYRIK B1/YARI/SID 35MM/ZEB
17	11.4018.032.004	FORK SPRING BOTTOMLESS TOKENS - 35MM/38MM DUAL POSITION AIR (QTY 3) - PIKE A1-A2/LYRIK B1+/YARI A1+/ZEB
17	11.4018.032.005	FORK SPRING BOTTOMLESS TOKENS - 35MM/38MM DUAL POSITION AIR (QTY 10) - PIKE A1-A2/LYRIK B1+/YARI A1+/ZEB
	11.4018.037.000	FORK SPRING SEALHEAD - 35mm SOLO AIR (INCLUDES SEALHEAD BACKUP RING, WAVE WASHER & SEALS) - PIKE A1-A2 (2014-2017)/PIKE DJ A2-A3 MAXLE
19	00.4318.005.001	AXLE MAXLE ULTIMATE FRONT, 15X100, LENGTH 146.5MM, THREAD LENGTH 9MM, THREAD PITCH M15X1.50 - PIKE, RS1, LYRIK B1, YARI, SID, SID SL, SID 35MM
19	00.4318.005.007	AXLE MAXLE ULTIMATE FRONT, 15X110, LENGTH 156.5MM, THREAD LENGTH 9MM, THREAD PITCH M15X1.50 - PIKE, LYRIK B1, YARI BOOST COMPATIBLE
20	11.4318.004.000	AXLE MAXLE - ULTIMATE LEVER ASSEMBLY B1
	SPARES	
21	11.4015.534.010	FORK HOSE CLAMP - PIKE/LYRIK/YARI/SID/REVELATION/BOXXER/XC30/30G/30S/RECON/SEKTOR/BLUTO/REBA/35G/35S
22	11.4308.327.002	AIR VALVE KIT - SCHRADER CORE (QTY 2) - FORKS/SHOCKS/REVERB
23	11.4018.028.005	FORK FOAM RING KIT - 35MM X 6MM (QTY 20) - PIKE/LYRIK B1/YARI/BOXXER/DOMAIN DUAL CROWN
24	11.4015.403.040	FORK SHAFT FASTENER KIT - (INCLUDES SHAFT BOLTS & CRUSH WASHERS) - PIKE
bulk	11.4015.259.000	FORK CRUSH WASHERS - 8MM (QTY 50)
bulk	11.4015.260.000	FORK CRUSH WASHER RETAINER - 8MM (QTY 50)
	TOOLS/GREASE/FLUIDS	
ns	00.4318.032.000	FORK LOWER LEG DUST SEAL INSTALLATION TOOL 35MM (FOR FLANGELESS AND FLANGED DUST SEALS)
ns	00.4315.023.010	HIGH-PRESSURE FORK/SHOCK PUMP (300 PSI MAX) ROCKSHOX
ns	00.4315.023.040	HIGH-PRESSURE FORK/SHOCK PUMP (300 PSI MAX) ROCKSHOX DIGITALGAUGE
ns	00.4315.022.010	REAR SHOCK SCHRADER VALVE REMOVAL TOOL ROCKSHOX
ns	11.4315.021.080	ROCKSHOX SUSPENSION OIL, 0W-30, 120ML BOTTLE - PIKE/REVELATION 2018+/LYRIK B1/YARI/SID 2020+ LOWER LEGS
ns	11.4015.354.050	ROCKSHOX SUSPENSION OIL, 0-W30, 1 LITER BOTTLE - PIKE/REVELATION 2018+/LYRIK B1/YARI/SID 2020+ LOWER LEGS
ns	11.4115.094.030	MAXIMA SUSPENSION OIL PLUSH, 3WT 1 LITER BOTTLE - REAR SHOCK/CHARGER DAMPER
25	11.4318.010.000	FORK BLEED KIT - CHARGER 1 DAMPER FITTING (FOR BLEEDING CHARGER 1 DAMPERS) - BOXXER 35MM B1-B2 (2015-2018)/PIKE A1-A2 (2014-2017)/LYRIK RCT3 A1, RC B1 (2016-2017)
ns	00.4318.007.000	RockShox Charger Damper Standard Bleed Kit (includes Syringe, Charger1 fitting, Standard fitting, Suspension Oil 3w) - Charger/RaceDay dampers
ns	00.4318.008.000	GREASE SRAM BUTTER 20ML SYRINGE, FRICTION REDUCING GREASE BYSLICKOLEUM - DOUBLE TIME HUB PAWLS, FORKS & REVERB SERVICE
ns	00.4318.008.001	GREASE SRAM BUTTER 1OZ CONTAINER, FRICTION REDUCING GREASE BY SLICKOLEUM - DOUBLE TIME HUB PAWLS, FORKS & REVERB SERVICE

PIKE 29+ RCT3 B1/RC C1 (2017-2019)

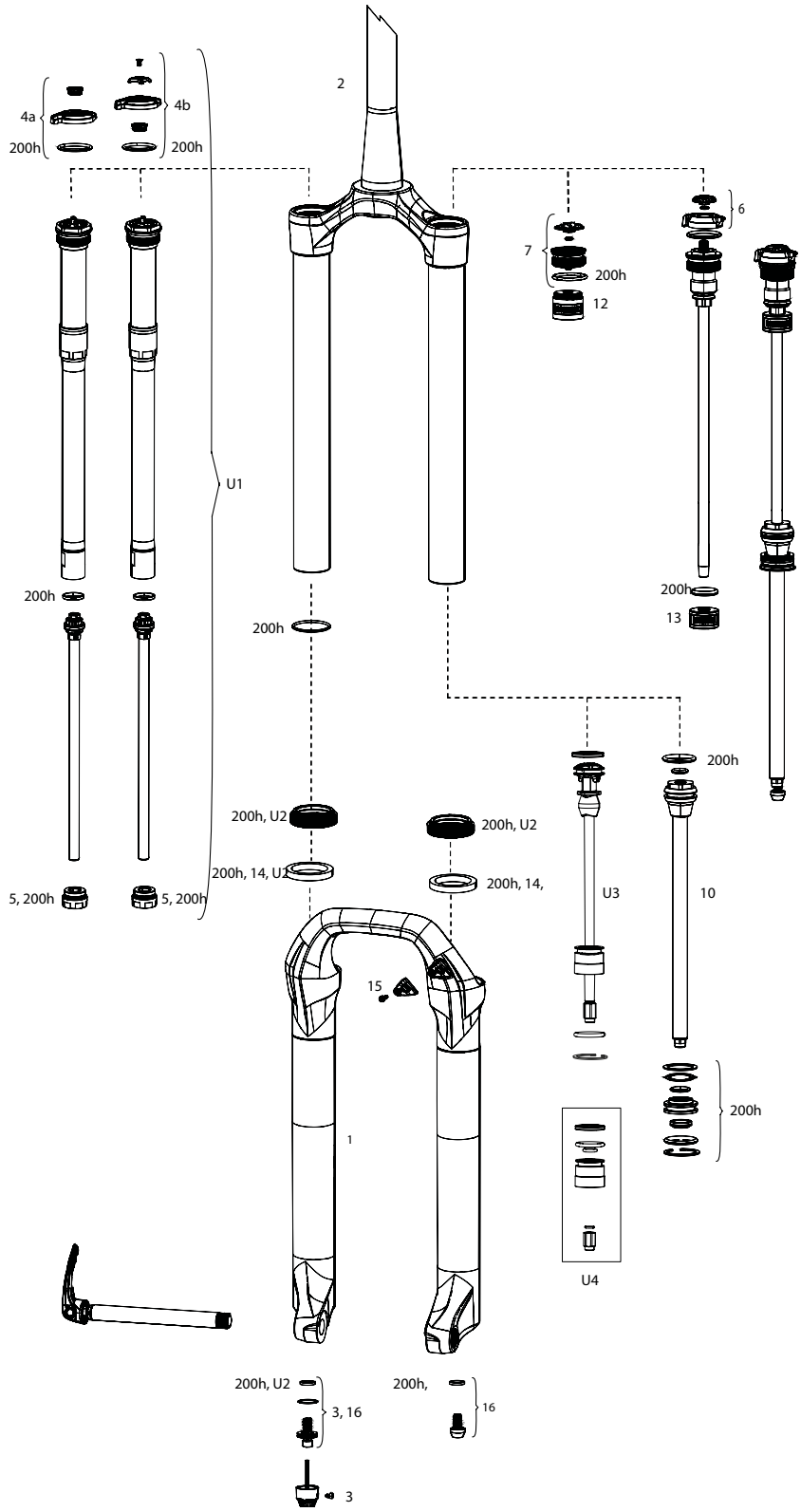

Note:

1. 200 Hour service kits include replaceable o-rings, glide rings, retaining rings, crush washers, and crush washer retainers. All air service kits include replacement schrader valve cores. A2. Charger damper fluid -use RockShox Rear Suspension Damping Fluid 3wt.
3. Charger lower leg lubricant - use RockShox Pike Suspension Oil, 0w-30.
4. Charger damper bleed - use Bleed fitting Charger Damper and RockShox Charger Damper Standard Bleed Kit.
5. For Travel Change and Bottomless Token options, see the respective pages in this catalog, listed in the Index.
6. Pike Solo Air CSU's do not come with gradients printed on the stanchion tubes.
7. Pike Boost Compatible threading for the top cap of the Charger Damper and Air Top Cap is specific to the Boost Compatible chassis.
8. A complete decal and maxle overview can be found in back of the catalog.

PIKE 29+ RCT3 B1/RC C1 (2017-2019)

	UPGRADES	
U1	00.4020.170.000	DAMPER UPGRADE KIT - CHARGER2.1 RC2 CROWN HIGH SPEED, LOW SPEED COMPRESSION (INCLUDES COMPLETE RIGHT SIDE INTERNALS) - LYRIK/YARI (A1+/2016+)/PIKE 29+(A2-B1/2017-2019)
U1	00.4020.170.001	DAMPER UPGRADE KIT - CHARGER2.1 RCT3 CROWN (INCLUDES COMPLETE RIGHT SIDE INTERNALS) - LYRIK/YARI (A1+/2016+)/PIKE 29+(A2-B1/2017-2019)
U1	00.4018.783.020	DAMPER UPGRADE KIT - CHARGER2 RCT REMOTE (INCLUDES COMPLETE RIGHT SIDE INTERNALS & ONELOC REMOTE) - LYRIK/YARI (A1+/2016+)/PIKE 29+(A2-B1/2017-2019)
U2	00.4318.045.004	FORK DUST WIPER UPGRADE KIT - 35MM BLACK FLANGELESS ULTRA-LOW FRICTION SKF SEALS (INCLUDES DUST WIPERS, 4MM & 6MM FOAM RINGS-PIKE/LYRIKB1/YARI/REVELATION/BOXXER/DOMAIN/35/SID35MM
U3	00.4020.552.000	Air Spring Upgrade Kit - DebonAir C1 160mm (Includes DebonAir C1Assembly, seal head) - PIKE B1+/Revelation A1+ (2018+)
U3	00.4020.552.001	Air Spring Upgrade Kit - DebonAir C1 150mm (Includes DebonAir C1Assembly, seal head) - PIKE B1+/Revelation A1+ (2018+)
U3	00.4020.552.002	Air Spring Upgrade Kit - DebonAir C1 140mm (Includes DebonAir C1Assembly, seal head) - PIKE B1+/Revelation A1+ (2018+)
U3	00.4020.552.003	Air Spring Upgrade Kit - DebonAir C1 130mm (Includes DebonAir C1Assembly, seal head) - PIKE B1+/Revelation A1+ (2018+)
U3	00.4020.552.004	Air Spring Upgrade Kit - DebonAir C1 120mm (Includes DebonAir C1Assembly, seal head) - PIKE B1+/Revelation A1+ (2018+)
U4	00.4020.573.000	SEAL HEAD UPGRADE KIT - DEBONAIR C1 35MM SEAL HEAD (INCLUDES SEAL HEAD & SPECIFIC NUT) - LYRIK RC C2+,RCT3 C1+(2019+)/YARI B1+/PIKE B2+/REVELATION A2+ (2019+)
	SERVICE	
200h	00.4315.032.620	200 HOUR/1 YEAR SERVICE KIT (INCLUDES DUST SEALS, FOAM RINGS, O-RING SEALS, CHARGER SEALHEAD, DPA SEALHEAD) - LYRIK/PIKE 29+ DUAL POSITION AIR A1 (2016-2017)
200h	00.4315.032.621	200 HOUR/1 YEAR SERVICE KIT (INCLUDES DUST SEALS, FOAM RINGS, O-RING SEALS, CHARGER SEALHEAD, SA SEALHEAD) - LYRIK/PIKE29+ SOLO AIR A1(2016-2017)
	LOWER LEG	
1	11.4018.006.268	FORK LOWER LEG - (DECALS NOT INCLUDED) 29+ 15X110 BOOST™ BLACK - PIKE 29+ B1+ (2017+)/YARI 29+ A1+(2017+)
1	11.4018.006.270	FORK LOWER LEG - (DECALS NOT INCLUDED) 29+ 15X110 BOOST™ DIFFUSION BLACK - PIKE 29+ B1+ (2017+)/YARI 29+ A1+(2017+)
	CSU	
2	11.4018.008.461	FORK CSU - DUAL POSITION AIR 2927+ BOOST™ COMPATIBLE 15X110 51 OFF-SET ALUMINUM TAPER DIFFUSION BLACK (NO GRADIENTS) - LYRIK B1+/YARI A1+/PIKE 29+
	DAMPER	
3	11.4018.082.004	FORK REBOUND DAMPER KNOB KIT - (INCLUDES ADJUSTER KNOB & BOLT) - CHARGER RC2/RCT2/RCT R - LYRIK, PIKE, BOXXER, ZEB
4a	11.4015.547.080	FORK COMPRESSION DAMPER KNOB KIT - CROWN CHARGER RC (INCLUDES KNOB & SCREW) - LYRIK B1/PIKE/PIKE DJ A2-A3 (2017+)
4b	11.4015.547.090	FORK COMPRESSION DAMPER KNOB KIT - CROWN CHARGER RCT3 (INCLUDES KNOB & SCREW) - LYRIK B1/PIKE
5	11.4018.107.000	FORK DAMPER SEALHEAD ASSEMBLY - CHARGER 2.1 - LYRIK RCT3 B1+/RC C1+, PIKE RCT3 B1+/RC2 C1+, BOXXER RC2 C1+, LYRIK/PIKE/BOXXER SELECT/SELECT+/ULTIMATE (RC2/RCT3) C2+
5	11.4018.107.001	FORK DAMPER SEALHEAD ASSEMBLY - CHARGER 2.1 - LYRIK RCT3 B1+/RC C1+, PIKE RCT3 B1+/RC2 C1+, BOXXER RC2 C1+, LYRIK/PIKE/BOXXER SELECT/SELECT+/ULTIMATE (RC2/RCT3) C2 - BULK, QTY10
ns	11.4018.031.020	FORK DAMPER CHARGER BLADDER ASSEMBLY - LYRIK RCT3 A1, RC B1/PIKE 29+ RCT3, RC 29+ (2017-2018)
	SPRING	
6	11.4018.120.000	FORK SPRING DUAL POSITION AIR KNOB - REVELATION A1+/PIKE A1+/LYRIK A1+/YARI A1+/ZEB A1+
7	11.4018.083.000	FORK SPRING AIR TOP CAP - 35MM (.5MM THREAD PITCH) BOOST™ 15X110 (INCLUDES SPLINED TOP CAP & VALVE COVER) - LYRIK A1+/YARI A1+/PIKE B1+/REVELATION A1+(35MM)/BOXXER 35MM/SID35MM
10	11.4018.026.005	FORK SPRING DUAL POSITION AIR SHAFT - 160MM-26, 150MM-27.5, 150MM-29+, 150MM - PIKE A1-A2 (2014-2017)/YARI A1+/LYRIK B1+
12	11.4018.032.000	FORK SPRING BOTTOMLESS TOKENS - 35MM/38MM SOLO AIR/DEBONAIR (QTY 3) - PIKE/BOXXER B1/LYRIK B1/YARI/SID 35MM/ZEB
12	11.4018.032.001	FORK SPRING BOTTOMLESS TOKENS - 35MM/38MM SOLO AIR/DEBONAIR (QTY 10) PIKE/BOXXER B1/LYRIK B1/YARI/SID 35MM/ZEB
13	11.4018.032.004	FORK SPRING BOTTOMLESS TOKENS - 35MM/38MM DUAL POSITION AIR (QTY 3) - PIKE A1-A2/LYRIK B1+/YARI A1+/ZEB
13	11.4018.032.005	FORK SPRING BOTTOMLESS TOKENS - 35MM/38MM DUAL POSITION AIR (QTY 10) - PIKE A1-A2/LYRIK B1+/YARI A1+/ZEB
	SPARES	
14	11.4018.028.005	FORK FOAM RING KIT - 35MM X 6MM (QTY 20) - PIKE/LYRIK B1/YARI/BOXXER/DOMAIN DUAL CROWN
bulk	11.4015.259.000	FORK CRUSH WASHERS - 8MM (QTY 50)
15	11.4015.534.010	FORK HOSE CLAMP - PIKE/LYRIK/YARI/SID/REVELATION/BOXXER/XC30/30G/30S/RECON/SEKTOR/BLUTO/REBA/35G/35S
ns	11.4308.327.002	AIR VALVE KIT - SCHRADER CORE (QTY 2) - FORKS/SHOCKS/REVERB
16	11.4015.403.090	FORK SHAFT FASTENER KIT - (INCLUDES SHAFT BOLTS & CRUSH WASHERS) - LYRIK RCT3 A1+, RC B1+,RC2 C1+ (2016+)/PIKE 29+ (2017/BOXXER C1+ (2019+), ZEB A1 (2021)
	TOOLS/GREASE/FLUIDS	
ns	00.4318.032.000	FORK LOWER LEG DUST SEAL INSTALLATION TOOL 35MM (FOR FLANGELESS AND FLANGED DUST SEALS)
ns	00.4315.023.010	HIGH-PRESSURE FORK/SHOCK PUMP (300 PSI MAX) ROCKSHOX
ns	00.4315.023.040	HIGH-PRESSURE FORK/SHOCK PUMP (300 PSI MAX) ROCKSHOX DIGITALGAUGE
ns	00.4315.022.010	REAR SHOCK SCHRADER VALVE REMOVAL TOOL ROCKSHOX
ns	11.4315.021.080	ROCKSHOX SUSPENSION OIL, 0W-30, 120ML BOTTLE - PIKE/REVELATION 2018+/LYRIK B1/YARI/SID 2020+ LOWER LEGS
ns	11.4015.354.050	ROCKSHOX SUSPENSION OIL, 0-W30, 1 LITER BOTTLE - PIKE/REVELATION 2018+/LYRIK B1/YARI/SID 2020+ LOWER LEGS
ns	11.4115.094.030	MAXIMA SUSPENSION OIL PLUSH, 3WT 1 LITER BOTTLE - REAR SHOCK/CHARGER DAMPER
ns	00.4318.007.000	RockShox Charger Damper Standard Bleed Kit (includes Syringe, Charger1 fitting, Standard fitting, Suspension Oil 3w) - Charger/RaceDay dampers
ns	00.4318.008.000	GREASE SRAM BUTTER 20ML SYRINGE, FRICTION REDUCING GREASE BYSLICKOLEUM - DOUBLE TIME HUB PAWLS, FORKS & REVERB SERVICE
ns	00.4318.008.001	GREASE SRAM BUTTER 1OZ CONTAINER, FRICTION REDUCING GREASE BY SLICKOLEUM - DOUBLE TIME HUB PAWLS, FORKS & REVERB SERVICE

PIKE DJ A2-A4 (2016-2021)

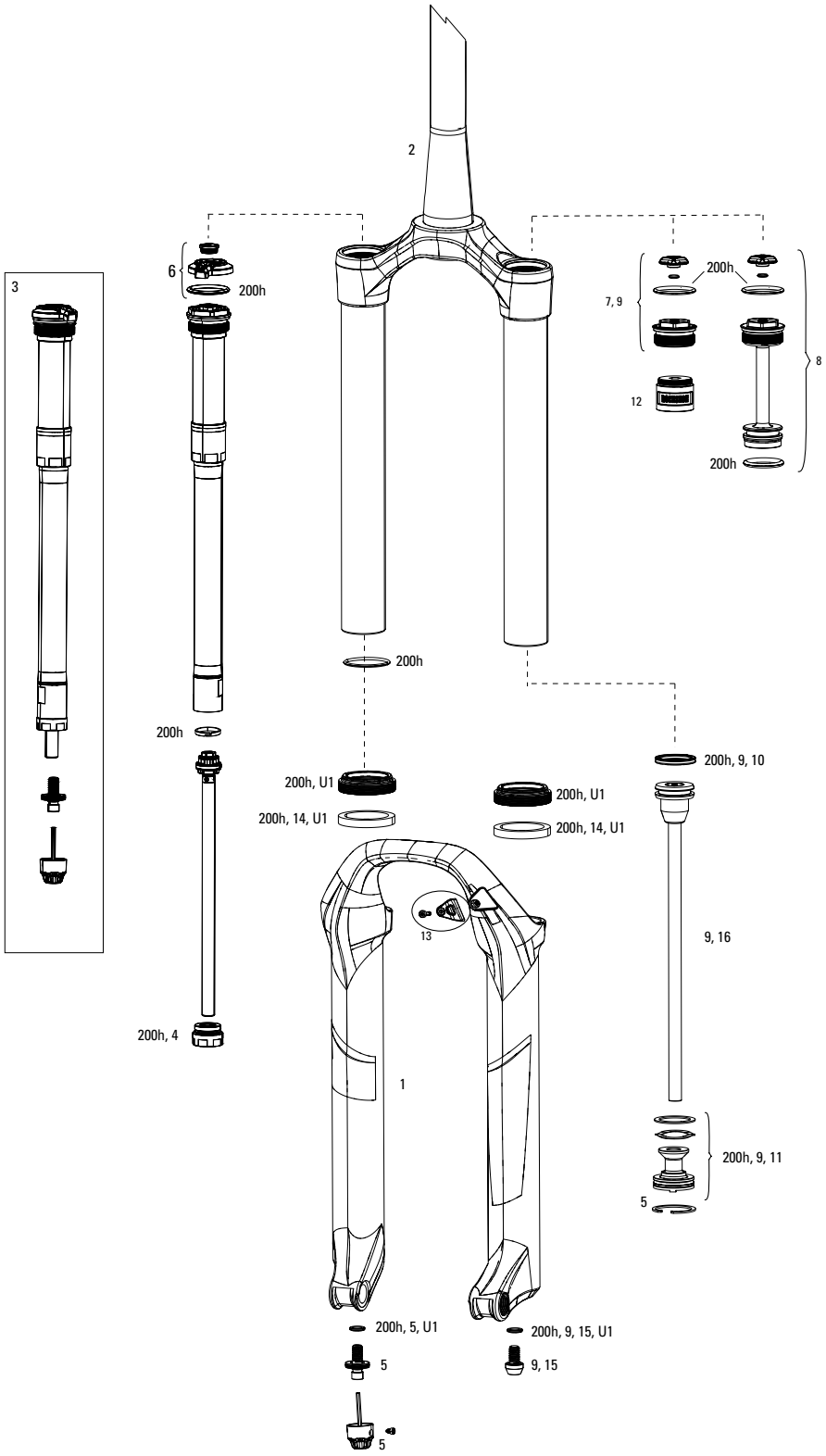

Note:

1. 200 Hour service kits include replaceable o-rings, glide rings, retaining rings, crush washers, and crush washer retainers. A2. Charger damper fluid -use RockShox Rear Suspension Damping Fluid 3wt.
2. Charger damper fluid -use RockShox Rear Suspension Damping Fluid 3wt.
3. Charger lower leg lubricant - use RockShox Pike Suspension Oil, 0w-30.
4. Charger damper bleed - use Bleed fitting Charger Damper and RockShox Charger Damper Standard Bleed Kit.
5. For Travel Change and Bottomless Token options, see the respective pages in this catalog, listed in the Index.
6. Pike DJ CSU's do not come with gradients printed on the stanchion tubes.
7. Pike DJ forks with .5mm top cap threads will be indicated with a machined circle around the tool interface.
8. A complete decal and maxle overview can be found in back of the catalog.

PIKE DJ A2-A4 (2016-2021)

	UPGRADES	
U1	00.4318.045.004	FORK DUST WIPER UPGRADE KIT - 35MM BLACK FLANGELESS ULTRA-LOW FRICTION SKF SEALS (INCLUDES DUST WIPERS, 4MM & 6MM FOAM RINGS-PIKE/LYRIKB1/YARI/REVELATION/BOXXER/DOMAIN/35/SID35MM
	SERVICE KIT	
200h	00.4315.032.619	200 HOUR/1 YEAR SERVICE KIT (INCLUDES DUST SEALS, FOAM RINGS, O-RING SEALS, CHARGER SEALHEAD, SA SEALHEAD) - PIKE/PIKE DJ SOLO AIR A1
200h	11.4018.027.003	FORK SERVICE KIT - FULL SERVICE SOLO AIR (INCLUDES UPGRADED SEALHEAD, SOLO AIR SEALS, DAMPER SEALS & HARDWARE) - PIKE (A1-A2/2014-2016)
	LOWER LEG	
1	11.4018.006.190	FORK LOWER LEG - (DECALS NOT INCLUDED) 26 15X100 BLACK - PIKE A1-A2 (2014-2017), PIKE DJ A2-A3 (2016+)
1	11.4018.006.192	FORK LOWER LEG - (DECALS NOT INCLUDED) 26 15X100 DIFFUSION BLACK - PIKE A1-A2 (2014-2017), PIKE DJ A2-A3 (2016+)
1	11.4018.091.028	FORK LOWER LEG - (DECALS INCLUDED, LOW FRICTION SKF WIPER SEALS) 26 15X100 SILVER - PIKE DJ A2-A3 (2016+)
	CSU	
2	11.4018.008.494	FORK CSU - SOLO AIR 26 40 OFF-SET ALUMINUM TAPER BLACK (NO GRADIENTS)(.5 THREAD PITCH) -PIKE DJ (2017+)
2	11.4018.008.496	FORK CSU - SOLO AIR 26 40 OFF-SET ALUMINUM TAPER DIFFUSION BLACK (NO GRADIENTS)(.5 THREAD PITCH) - PIKE DJ (2017+)
	DAMPER	
3	11.4018.009.080	FORK DAMPER ASSEMBLY - CROWN CHARGER RC 26 THREAD PITCH 0.5MM 100MM MAX TRAVEL (INCLUDES RIGHT SIDE INTERNALS) - PIKE DJ A2-A3 (2017+)
3	11.4018.009.081	FORK DAMPER ASSEMBLY - CROWN CHARGER RC 26 THREAD PITCH 0.5MM 140MM MAX TRAVEL (INCLUDES RIGHT SIDE INTERNALS) - PIKE DJ A2-A3 (2017+)
4	11.4015.353.030	FORK DAMPER SEALHEAD ASSEMBLY - CHARGER 1, LYRIK RCT3 A1/RC B1, PIKE A1-A2 35MM
5	11.4018.082.004	FORK REBOUND DAMPER KNOB KIT - (INCLUDES ADJUSTER KNOB & BOLT) - CHARGER RC2/RCT2/RCT R - LYRIK, PIKE, BOXXER, ZEB
6	11.4015.547.080	FORK COMPRESSION DAMPER KNOB KIT - CROWN CHARGER RC (INCLUDES KNOB & SCREW) - LYRIK B1/PIKE/PIKE DJ A2-A3 (2017+)
	SPRING	
7	11.4018.012.010	FORK SPRING AIR TOP CAP - 35MM (.5MM THREAD PITCH) BOOST™ 15X110 - PIKE A2/LYRIK A1+/YARI A1+/REVELATION A1+(2018+)/PIKE DJ (2017+)
8	11.4018.012.013	FORK SPRING AIR TOP CAP - 35MM (.5MM THREAD PITCH) (INCLUDES TOP CAP & VALVE COVER, BOTTOMLESS TOKEN COMPATIBLE)/PIKE DJ (2017+)
9	11.4018.010.202	FORK SPRING SOLO AIR ASSEMBLY - 100MM (THREAD PITCH 0.5MM) (INCLUDES TOP CAP, AIR PISTON, SHAFT BOLT) - PIKE DJ A2-A3
9	11.4018.010.203	FORK SPRING SOLO AIR ASSEMBLY - 110MM (THREAD PITCH 0.5MM) (INCLUDES TOP CAP, AIR PISTON, SHAFT BOLT) - PIKE DJ A2-A3
9	11.4018.010.204	FORK SPRING SOLO AIR ASSEMBLY - 140MM (THREAD PITCH 0.5MM) (INCLUDES TOP CAP, AIR PISTON, SHAFT BOLT) - PIKE DJ A2-A3
16	11.4018.026.018	FORK SPRING SOLO AIR SHAFT - 100mm-26 - PIKE DJ A2 (2016-2019)
16	11.4018.026.019	FORK SPRING SOLO AIR SHAFT - 110mm-26 - PIKE DJ A2 (2016-2019)
12	11.4018.032.000	FORK SPRING BOTTOMLESS TOKENS - 35MM/38MM SOLO AIR/DEBONAIR (QTY 3) - PIKE/BOXXER B1/LYRIK B1/YARI/SID 35MM/ZEB
12	11.4018.032.001	FORK SPRING BOTTOMLESS TOKENS - 35MM/38MM SOLO AIR/DEBONAIR (QTY 10) PIKE/BOXXER B1/LYRIK B1/YARI/SID 35MM/ZEB
	11.4018.037.000	FORK SPRING SEALHEAD - 35mm SOLO AIR (INCLUDES SEALHEAD BACKUP RING, WAVE WASHER & SEALS) - PIKE A1-A2 (2014-2017)/PIKE DJ A2-A3
	SPARES	
13	11.4015.534.010	FORK HOSE CLAMP - PIKE/LYRIK/YARI/SID/REVELATION/BOXXER/XC30/30G/30S/RECON/SEKTOR/BLUTO/REBA/35G/35S
14	11.4018.028.005	FORK FOAM RING KIT - 35MM X 6MM (QTY 20) - PIKE/LYRIK B1/YARI/BOXXER/DOMAIN DUAL CROWN
15	11.4015.403.090	FORK SHAFT FASTENER KIT - (INCLUDES SHAFT BOLTS & CRUSH WASHERS) - LYRIK RCT3 A1+, RC B1+,RC2 C1+ (2016+)/PIKE 29+ (2017/BOXXER C1+ (2019+), ZEB A1 (2021)
bulk	11.4015.259.000	FORK CRUSH WASHERS - 8MM (QTY 50)
bulk	11.4018.028.014	FORK DUST WIPER KIT - 35MM BLACK LOW FRICTION SKF (INCLUDES FLANGELESS DUST WIPERS) (QTY 20) - PIKE/LYRIK B1/YARI/BOXXER/DOMAIN/REVELATION 35MM/35G
bulk	11.4018.028.005	FORK FOAM RING KIT - 35MM X 6MM (QTY 20) - PIKE/LYRIK B1/YARI/BOXXER/DOMAIN DUAL CROWN
ns	11.4308.327.002	AIR VALVE KIT - SCHRADER CORE (QTY 2) - FORKS/SHOCKS/REVERB
ns	00.4318.005.001	AXLE MAXLE ULTIMATE FRONT, 15X100, LENGTH 146.5MM, THREAD LENGTH 9MM, THREAD PITCH M15X1.50 - PIKE, RS1, LYRIK B1, YARI, SID, SID SL, SID 35MM
	TOOLS/GREASE/FLUIDS	
ns	00.4318.032.000	FORK LOWER LEG DUST SEAL INSTALLATION TOOL 35MM (FOR FLANGELESS AND FLANGED DUST SEALS)
ns	00.4315.023.010	HIGH-PRESSURE FORK/SHOCK PUMP (300 PSI MAX) ROCKSHOX
ns	00.4315.023.040	HIGH-PRESSURE FORK/SHOCK PUMP (300 PSI MAX) ROCKSHOX DIGITALGAUGE
ns	00.4315.022.010	REAR SHOCK SCHRADER VALVE REMOVAL TOOL ROCKSHOX
ns	11.4315.021.080	ROCKSHOX SUSPENSION OIL, 0W-30, 120ML BOTTLE - PIKE/REVELATION 2018+/LYRIK B1/YARI/SID 2020+ LOWER LEGS
ns	11.4015.354.050	ROCKSHOX SUSPENSION OIL, 0-W30, 1 LITER BOTTLE - PIKE/REVELATION 2018+/LYRIK B1/YARI/SID 2020+ LOWER LEGS
ns	11.4115.094.030	MAXIMA SUSPENSION OIL PLUSH, 3WT 1 LITER BOTTLE - REAR SHOCK/CHARGER DAMPER
ns	00.4318.007.000	RockShox Charger Damper Standard Bleed Kit (includes Syringe, Charger1 fitting, Standard fitting, Suspension Oil 3w) - Charger/RaceDay dampers
ns	00.4318.008.000	GREASE SRAM BUTTER 20ML SYRINGE, FRICTION REDUCING GREASE BYSLICKOLEUM - DOUBLE TIME HUB PAWLS, FORKS & REVERB SERVICE
ns	00.4318.008.001	GREASE SRAM BUTTER 1OZ CONTAINER, FRICTION REDUCING GREASE BY SLICKOLEUM - DOUBLE TIME HUB PAWLS, FORKS & REVERB SERVICE

DOMAIN A1-A2 (2007-2016)

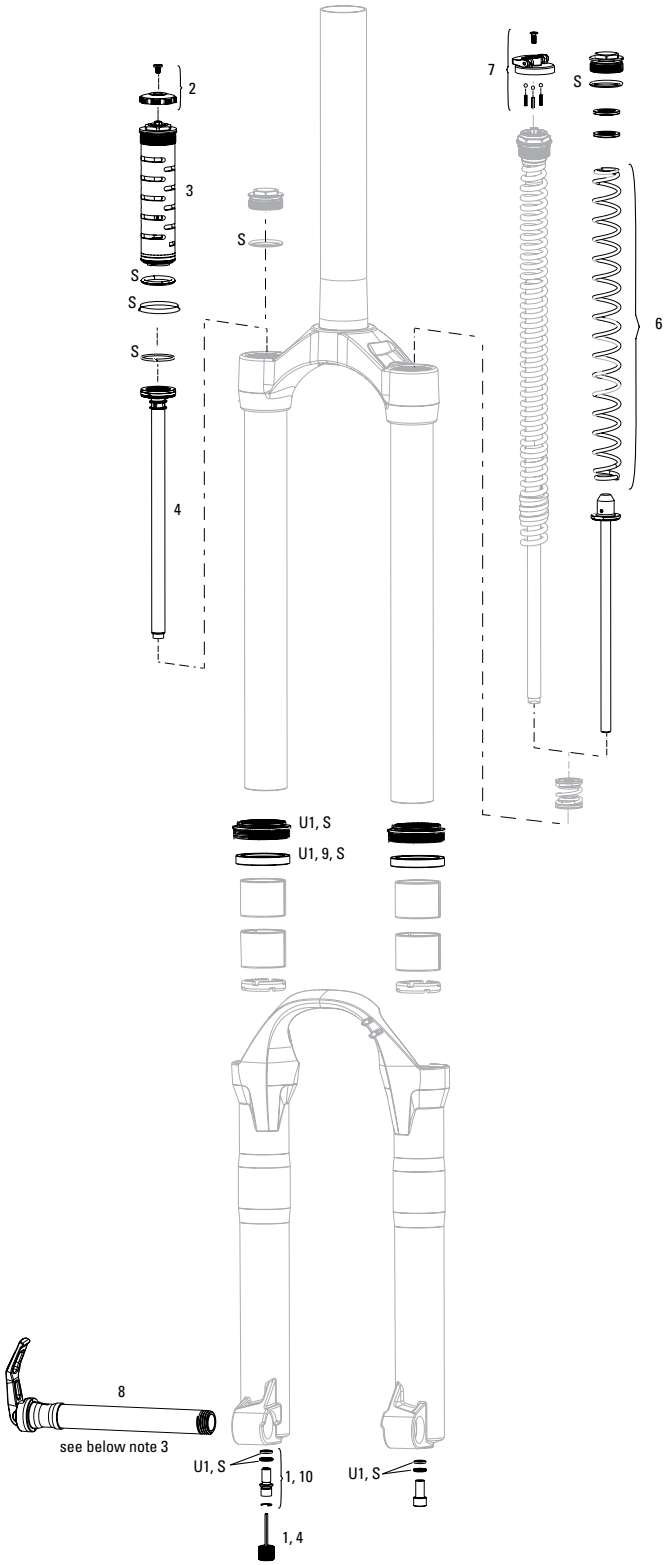

Note:

1. Full service kits include replaceable o-rings, glide rings, retaining rings, crush washers, crush washer retainers and shaft bolts/nuts. All air service kits include replacement schrader valve cores. Not all service parts are pictured. All basic service kits include the following replaceable wear items: o-rings, glide rings, dust seals, and foam rings.
2. Aftermarket forks include Medium spring installed. Soft and Firm tuning springs are included in fork box.
3. A complete decal and maxle overview can be found in back of the catalog.

DOMAIN A1-A2 (2007-2016)

	UPGRADES	
U1	00.4318.045.004	FORK DUST WIPER UPGRADE KIT - 35MM BLACK FLANGELESS ULTRA-LOW FRICTION SKF SEALS (INCLUDES DUST WIPERS, 4MM & 6MM FOAM RINGS-PIKE/LYRIKB1/YARI/ REVELATION/BOXXER/DOMAIN/35/SID35MM
	SERVICE	
S	00.4315.032.230	AM FORK SERVICE KIT, BASIC (INCLUDES DUST SEALS, FOAM RINGS,O-RING SEALS) - DOMAIN (2012-2016)/DOMAIN DUAL CROWN
ns	11.4015.054.000	FORK SERVICE KIT - DAMPER COMP/REBOUND (INCLUDES BOTTOM OUT BUMPERS) - DOMAIN 2011-2016
	DAMPER	
1	11.4015.074.000	FORK REBOUND DAMPER KNOB KIT - (INCLUDES ADJUSTER KNOB & BOLT) - DOMAIN/LYRIK/TOTEM/10-14 BOXXER RC
2	11.4015.367.000	FORK COMPRESSION DAMPER KNOB KIT - CROWN MOCO IS COMPRESSION DAMPER (2010-2016 BOXXER, DOMAIN, LYRIK, TOTEM)
3	11.4015.051.000	FORK COMPRESSION DAMPER - CROWN MOCO IS (INCLUDES COMPRESSION KNOB & BOLT) - DOMAIN
	SPRING	
6	11.4015.179.000	FORK SPRING COIL - X-SOFT (SILVER) - DOMAIN SINGLE CROWN A1-A2 (2007- 2016)
6	11.4015.047.000	FORK SPRING COIL - SOFT (YELLOW) - DOMAIN SINGLE CROWN A1-A2 (2007- 2016)
6	11.4015.046.000	FORK SPRING COIL - MEDIUM (RED) - DOMAIN SINGLE CROWN A1-A2 (2007- 2016)
6	11.4015.045.000	FORK SPRING COIL - FIRM (BLUE) - DOMAIN SINGLE CROWN A1-A2 (2007- 2016)
6	11.4015.048.000	FORK SPRING COIL - X-FIRM (BLACK) - DOMAIN SINGLE CROWN A1-A2 (2007- 2016)
7	11.4310.717.000	FORK SPRING COIL KNOB - U-TURN TRAVEL ADJUSTER ALUMINUM LEVER
8	00.4315.013.030	AXLE MAXLE LITE FRONT MTB 20X110 LENGTH 165MM THREAD LENGTH 9MM THREAD PITCH M20X2.0 - 35MM/40MM CHASSIS (2011-2016)
	TOOLS/GREASE/FLUIDS	
ns	00.4318.032.000	FORK LOWER LEG DUST SEAL INSTALLATION TOOL 35MM (FOR FLANGELESS AND FLANGED DUST SEALS)
9	11.4018.028.005	FORK FOAM RING KIT - 35MM X 6MM (QTY 20) - PIKE/LYRIK B1/YARI/BOXXER/DOMAIN DUAL CROWN
10	11.4310.465.000	FORK SHAFT FASTENER KIT - (INCLUDES SHAFT BOLTS & CRUSH WASHERS)
bulk	11.4015.259.000	FORK CRUSH WASHERS - 8MM (QTY 50)
bulk	11.4015.260.000	FORK CRUSH WASHER RETAINER - 8MM (QTY 50)
ns	11.4315.021.020	ROCKSHOX SUSPENSION OIL, 5WT, 120ML BOTTLE - FORK DAMPER
ns	11.4015.354.010	ROCKSHOX SUSPENSION OIL, 5WT, 1 LITER BOTTLE - FORK DAMPER
ns	11.4315.021.040	ROCKSHOX SUSPENSION OIL, 15WT, 120ML BOTTLE - LOWER LEGS
ns	11.4015.354.030	ROCKSHOX SUSPENSION OIL, 15WT, 1 LITER BOTTLE - LOWER LEGS
nns	00.4318.008.000	GREASE SRAM BUTTER 20ML SYRINGE, FRICTION REDUCING GREASE BYSLICKOLEUM - DOUBLE TIME HUB PAWLS, FORKS & REVERB SERVICE
ns	00.4318.008.001	GREASE SRAM BUTTER 1OZ CONTAINER, FRICTION REDUCING GREASE BY SLICKOLEUM - DOUBLE TIME HUB PAWLS, FORKS & REVERB SERVICE

DOMAIN DUAL CROWN A1-A3 (2007-2017)

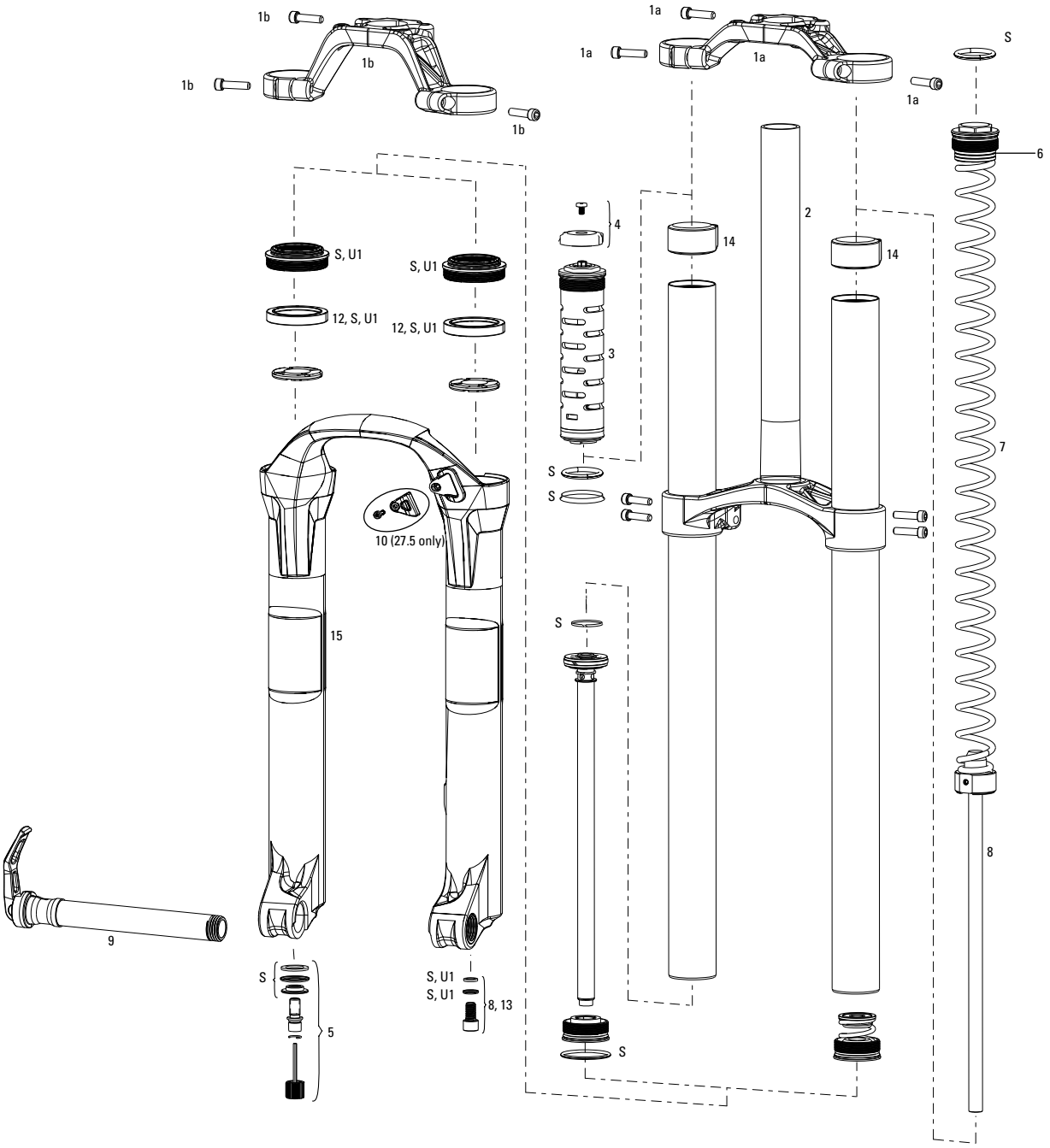

Note:

1. Full service kits include replaceable o-rings, glide rings, retaining rings, crush washers, crush washer retainers and shaft bolts/nuts. All air service kits include replacement schrader valve cores. Not all service parts are pictured. All basic service kits include the following replaceable wear items: o-rings, glide rings, dust seals, and foam rings.
2. Domain (single-crown) lower legs are NOT compatible with Domain Dual Crown.
3. Domain Dual Crown 26" forks have a 160 post mount brake and 27.5" forks have a 200mm post mount brake.
4. Aftermarket forks with Medium spring installed. Soft and Firm tuning springs are included in fork box.
5. A complete decal and maxle overview can be found in back of the catalog.

DOMAIN DUAL CROWN A1-A3 (2007-2017)

	UPGRADES	
U1	00.4318.045.004	FORK DUST WIPER UPGRADE KIT - 35MM BLACK FLANGELESS ULTRA-LOW FRICTION SKF SEALS (INCLUDES DUST WIPERS, 4MM & 6MM FOAM RINGS-PIKE/LYRIKB1/YARI/REVELATION/BOXXER/DOMAIN/35/SID35MM
	SERVICE	
S	00.4315.032.230	AM FORK SERVICE KIT, BASIC (INCLUDES DUST SEALS, FOAM RINGS,O-RING SEALS) - DOMAIN (2012-2016)/DOMAIN DUAL CROWN
ns	11.4015.054.000	FORK SERVICE KIT - DAMPER COMP/REBOUND (INCLUDES BOTTOM OUT BUMPERS) - DOMAIN 2011-2016
	CROWN	
1a	11.4015.364.100	FORK UPPER CROWN- 35MM, SHORT BLACK CLEAR - BOXXER/DOMAIN DUAL CROWN B1-B2 (2015-2018)
1b	11.4015.364.130	FORK UPPER CROWN - 35MM, TALL BLACK CLEAR - BOXXER/DOMAIN DUAL CROWN B1-B2 (2015-2018)
2	11.4015.362.070	FORK CSU LOWER CROWN/STEERER ASSEMBLY - BLACK 35MM - DOMAIN DUAL CROWN/BOXXER
	DAMPER	
3	11.4015.051.000	FORK COMPRESSION DAMPER - CROWN MOCO IS (INCLUDES COMPRESSION KNOB & BOLT) - DOMAIN
4	11.4015.367.000	FORK COMPRESSION DAMPER KNOB KIT - CROWN MOCO IS COMPRESSION DAMPER (2010-2016 BOXXER, DOMAIN, LYRIK, TOTEM)
5	11.4015.074.000	FORK REBOUND DAMPER KNOB KIT - (INCLUDES ADJUSTER KNOB & BOLT) - DOMAIN/LYRIK/TOTEM/10-14 BOXXER RC
	SPRING	
6	11.4015.376.000	FORK SPRING COIL SPACERS - PRELOAD (QTY 4) - DOMAIN DUAL CROWN A1-A3 (2007- 2017)/BOXXER RACE/RC, TEAM/R2C2 (2010- 2018)
7	11.4015.380.000	FORK SPRING COIL - X-SOFT (SILVER) - DOMAIN DUAL CROWN A1-A3 (2007- 2017)/BOXXER RACE/RC, TEAM/R2C2 (2010- 2018)
7	11.4015.380.010	FORK SPRING COIL - SOFT (YELLOW) - DOMAIN DUAL CROWN A1-A3 (2007- 2017)/BOXXER RACE/RC, TEAM/R2C2 (2010- 2018)
7	11.4015.380.020	FORK SPRING COIL - MEDIUM (RED) - DOMAIN DUAL CROWN A1-A3 (2007- 2017)/BOXXER RACE/RC, TEAM/R2C2 (2010- 2018)
7	11.4015.380.030	FORK SPRING COIL - FIRM (BLUE) - DOMAIN DUAL CROWN A1-A3 (2007- 2017)/BOXXER RACE/RC, TEAM/R2C2 (2010- 2018)
7	11.4015.380.040	FORK SPRING COIL - X-FIRM (BLACK) - DOMAIN DUAL CROWN A1-A3 (2007- 2017)/BOXXER RACE/RC, TEAM/R2C2 (2010- 2018)
8	11.4015.381.000	FORK SPRING COIL SHAFT - (INCLUDES SHAFT BOLT) - DOMAIN DUAL CROWN A1-A3 (2007- 2017)/BOXXER RACE/RC, TEAM/R2C2 (2010- 2018)
	SPARES	
9	00.4315.013.030	AXLE MAXLE LITE FRONT MTB 20X110 LENGTH 165MM THREAD LENGTH 9MM THREAD PITCH M20X2.0 - 35MM/40MM CHASSIS (2011-2016)
10	11.4015.534.010	FORK HOSE CLAMP - PIKE/LYRIK/YARI/SID/REVELATION/BOXXER/XC30/30G/30S/RECON/SEKTOR/BLUTO/REBA/35G/35S
12	11.4018.028.005	FORK FOAM RING KIT - 35MM X 6MM (QTY 20) - PIKE/LYRIK B1/YARI/BOXXER/DOMAIN DUAL CROWN
13	11.4015.391.000	FORK SHAFT FASTENER KIT - (INCLUDES SHAFT BOLTS & CRUSH WASHERS) - DOMAIN DUAL CROWN/BOXXER 2010-2014
bulk	11.4015.259.000	FORK CRUSH WASHERS - 8MM (QTY 50)
bulk	11.4015.260.000	FORK CRUSH WASHER RETAINER - 8MM (QTY 50)
14	11.4015.361.000	FORK BUMPER STOP KIT - UPPER TUBE/FRAME (QTY 2) - DOMAIN DUAL CROWN/BOXXER 35MM
ns	11.4015.359.000	FORK BUSHING KIT - 35MM UPPER 35X38MM, LOWER 35X53MM - DOMAIN DUAL CROWN2011-2015 /BOXXER A1-A2 (2010-2014)
15	11.4018.006.222	FORK LOWER LEG - (DECALS NOT INCLUDED) 27 20X110 DIFFUSION BLACK - BOXXER (B1/2015-2017), DOMAIN DUAL CROWN (2015-2017)
	TOOLS/GREASE/FLUIDS	
ns	00.4318.032.000	FORK LOWER LEG DUST SEAL INSTALLATION TOOL 35MM (FOR FLANGELESS AND FLANGED DUST SEALS)
ns	11.4315.021.020	ROCKSHOX SUSPENSION OIL, 5WT, 120ML BOTTLE - FORK DAMPER
ns	11.4015.354.010	ROCKSHOX SUSPENSION OIL, 5WT, 1 LITER BOTTLE - FORK DAMPER
ns	11.4315.021.040	ROCKSHOX SUSPENSION OIL, 15WT, 120ML BOTTLE - LOWER LEGS
ns	11.4015.354.030	ROCKSHOX SUSPENSION OIL, 15WT, 1 LITER BOTTLE - LOWER LEGS
ns	00.4318.008.000	GREASE SRAM BUTTER 20ML SYRINGE, FRICTION REDUCING GREASE BYSLICKOLEUM - DOUBLE TIME HUB PAWLS, FORKS & REVERB SERVICE
ns	00.4318.008.001	GREASE SRAM BUTTER 1OZ CONTAINER, FRICTION REDUCING GREASE BY SLICKOLEUM - DOUBLE TIME HUB PAWLS, FORKS & REVERB SERVICE

YARI A1-B3 (2016-2020)

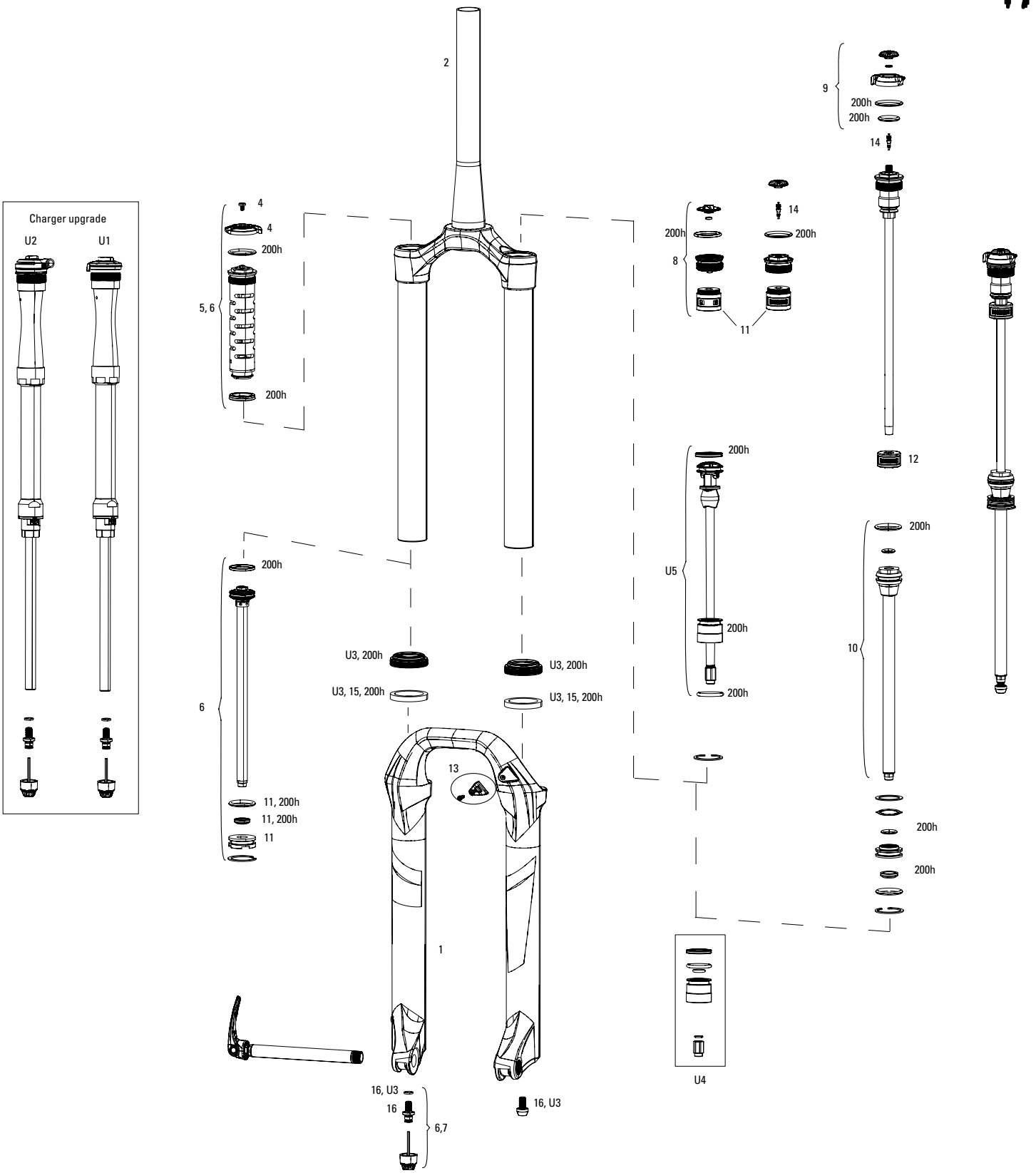

Note:

1. 200h service kits include replaceable o-rings, glide rings, retaining rings, crush washers, sealheads, lower leg seals and foam rings. See www.sram.com/service for more information.
2. For Travel Change and Bottomless Token options, see the respective pages in this catalog, listed in the Index.
3. Yari CSU's do not come with gradients printed on the stanchion tubes.
4. A complete decal and maxle overview can be found in back of the catalog.

YARI A1-B3 (2016-2020)

U1	00.4020.170.000	DAMPER UPGRADE KIT - CHARGER2.1 RC2 CROWN HIGH SPEED, LOW SPEED COMPRESSION (INCLUDES COMPLETE RIGHT SIDE INTERNALS) - LYRIK/YARI (A1+/2016+)/PIKE 29+(A2-B1/2017-2019)
U1	00.4020.170.001	DAMPER UPGRADE KIT - CHARGER2.1 RCT3 CROWN (INCLUDES COMPLETE RIGHT SIDE INTERNALS) - LYRIK/YARI (A1+/2016+)/PIKE 29+(A2-B1/2017-2019)
U2	00.4018.783.020	DAMPER UPGRADE KIT - CHARGER2 RCT REMOTE (INCLUDES COMPLETE RIGHT SIDE INTERNALS & ONELOC REMOTE) - LYRIK/YARI (A1+/2016+)/PIKE 29+(A2-B1/2017-2019)
U3	00.4318.045.004	FORK DUST WIPER UPGRADE KIT - 35MM BLACK FLANGELESS ULTRA-LOW FRICTION SKF SEALS (INCLUDES DUST WIPERS, 4MM & 6MM FOAM RINGS-PIKE/LYRIKB1/YARI/REVELATION/BOXXER/DOMAIN/35/SID35MM
U4	00.4020.573.000	SEAL HEAD UPGRADE KIT - DEBONAIR C1 35MM SEAL HEAD (INCLUDES SEAL HEAD & SPECIFIC NUT) - LYRIK RC C2+,RCT3 C1+(2019+)/YARI B1+/PIKE B2+/REVELATION A2+ (2019+)
U5	00.4020.572.000	AIR SPRING UPGRADE KIT - DEBONAIR C1 180MM (INCLUDES DEBONAIRASSEMBLY, SEAL HEAD) - LYRIK/YARI A1+ (2016+)
U5	00.4020.572.001	AIR SPRING UPGRADE KIT - DEBONAIR C1 170MM (INCLUDES DEBONAIRASSEMBLY, SEAL HEAD) - LYRIK/YARI A1+ (2016+)
U5	00.4020.572.002	AIR SPRING UPGRADE KIT - DEBONAIR C1 160MM (INCLUDES DEBONAIRASSEMBLY, SEAL HEAD) - LYRIK/YARI A1+ (2016+)
U5	00.4020.572.003	AIR SPRING UPGRADE KIT - DEBONAIR C1 150MM (INCLUDES DEBONAIRASSEMBLY, SEAL HEAD) - LYRIK/YARI A1+ (2016+)
U5	00.4020.572.004	AIR SPRING UPGRADE KIT - DEBONAIR C1 140MM (INCLUDES DEBONAIRASSEMBLY, SEAL HEAD) - YARI A1+ (2016+)
U5	00.4020.572.005	AIR SPRING UPGRADE KIT - DEBONAIR C1 130MM (INCLUDES DEBONAIRASSEMBLY, SEAL HEAD) - YARI A1+ (2016+)
U5	00.4020.572.006	AIR SPRING UPGRADE KIT - DEBONAIR C1 120MM (INCLUDES DEBONAIRASSEMBLY, SEAL HEAD) - YARI A1+ (2016+)
	SERVICE	
200h	00.4315.032.622	200 HOUR/1 YEAR SERVICE KIT (INCLUDES DUST SEALS, FOAM RINGS, O-RING SEALS, DPA SEALHEAD) - YARI DUAL POSITION AIR A1
200h	00.4315.032.623	200 HOUR/1 YEAR SERVICE KIT (INCLUDES DUST SEALS, FOAM RINGS, O-RING SEALS, SA SEALHEAD) - YARI RC SOLO AIR A1-B1 (2016-2018)
200h	00.4318.025.180	200 HOUR/1 YEAR SERVICE KIT (INCLUDES DUST SEALS, FOAM RINGS, O-RINGS, DAMPER SEALHEAD, DB C1 SEALHD)-YARI CHRC B1+/RC B2-B3/PIKE B3+/LYRIK C2+ SELECT/REVELATION CHRC A1+/RC A2-A3
	LOWER LEG	
1	11.4018.006.240	FORK LOWER LEG - (DECALS NOT INCLUDED) 27 15X100 BLACK - LYRIK B1+(2016+)/YARI A1+ (2016+)
1	11.4018.006.242	FORK LOWER LEG - (DECALS NOT INCLUDED) 27 15X100 DIFFUSION BLACK - LYRIK B1+(2016+)/YARI A1+ (2016+)
1	11.4018.006.245	FORK LOWER LEG - (DECALS NOT INCLUDED) 29 15X100 DIFFUSION BLACK - LYRIK B1+(2016+)/YARI A1+ (2016+)
	LOWER LEG - BOOST	
1	11.4018.095.004	FORK LOWER LEG - (DECALS NOT INCLUDED) 29 15X110 BOOST™ DIFFUSION BLACK - LYRIK B1+(2016+)/YARI A1+ (2016+)
1	11.4018.095.005	FORK LOWER LEG - (DECALS NOT INCLUDED) 29 15X110 BOOST™ BLACK - LYRIK B1+(2016+)/YARI A1+ (2016+)
1	11.4018.095.006	FORK LOWER LEG - (DECALS NOT INCLUDED) 27 15X110 BOOST™ DIFFUSION BLACK - LYRIK B1+(2016+)/YARI A1+ (2016+)
1	11.4018.095.007	FORK LOWER LEG - (DECALS NOT INCLUDED) 27 15X110 BOOST™ BLACK - LYRIK B1+(2016+)/YARI A1+ (2016+)
	CSU	
2	11.4018.008.438	FORK CSU - SOLO AIR 27.5 42 OFF-SET ALUMINUM TAPER BLACK (NO GRADIENTS) - LYRIK B1/YARI
2	11.4018.008.440	FORK CSU - SOLO AIR 27.5 42 OFF-SET ALUMINUM TAPER DIFFUSION BLACK (NO GRADIENTS) - LYRIK B1/YARI
2	11.4018.008.446	FORK CSU - SOLO AIR 2951 OFF-SET ALUMINUM TAPER DIFFUSION BLACK (NO GRADIENTS) - LYRIK B1/YARI
2	11.4018.008.443	FORK CSU - DUAL POSITION AIR 27.5 42 OFF-SET ALUMINUM TAPER DIFFUSION BLACK (NO GRADIENTS) - LYRIK B1/YARI
	11.4018.008.449	FORK CSU - DUAL POSITION AIR 29 51 OFF-SET ALUMINUM TAPER DIFFUSION BLACK (NO GRADIENTS) - LYRIK B1/YARI
	CSU BOOST	
2	11.4018.090.000	FORK CSU - DEBONAIR 27.5/29 46 OFF-SET ALUMINUM TAPER BLACK (NO GRADIENTS) - LYRIK/YARI (2017+)
2	11.4018.090.001	FORK CSU - DEBONAIR 27.5/29 46 OFF-SET ALUMINUM TAPER DIFFUSION BLACK (NO GRADIENTS) LYRIK/YARI (2017+)
2	11.4018.090.017	FORK CSU - DEBONAIR 27.5/29 37 OFF-SET ALUMINUM TAPER GLOSS BLACK (NO GRADIENTS) LYRIK ULTIMATE (2020+)
2	11.4018.090.003	FORK CSU - DEBONAIR 27.5/29 37 OFF-SET ALUMINUM TAPER DIFFUSION BLACK (NO GRADIENTS) LYRIK/YARI (2017+)
2	11.4018.090.018	FORK CSU - DEBONAIR 29 BOOST 42 OFF-SET ALUMINUM TAPER GLOSS BLACK (NO GRADIENTS) LYRIK ULTIMATE (2020+)
2	11.4018.090.005	FORK CSU - DEBONAIR 27.5/29 42 OFF-SET ALUMINUM TAPER DIFFUSION BLACK (NO GRADIENTS) LYRIK/YARI (2017+)
2	11.4018.090.006	FORK CSU - DEBONAIR 27.5/29 51 OFF-SET ALUMINUM TAPER BLACK (NO GRADIENTS) - LYRIK/YARI (2017+)
2	11.4018.090.007	FORK CSU - DEBONAIR 27.5/29 51 OFF-SET ALUMINUM TAPER DIFFUSION BLACK (NO GRADIENTS) LYRIK/YARI (2017+)
2	11.4018.008.455	FORK CSU - DUAL POSITION AIR 27.5 BOOST™ COMPATIBLE 15X110 42 OFF-SET ALUMINUM TAPER DIFFUSION BLACK (NO GRADIENTS) - LYRIK B1+/YARI A1+
2	11.4018.008.461	FORK CSU - DUAL POSITION AIR 2927+ BOOST™ COMPATIBLE 15X110 51 OFF-SET ALUMINUM TAPER DIFFUSION BLACK (NO GRADIENTS) - LYRIK B1+/YARI A1+/PIKE 29+
2	11.4018.008.453	FORK CSU - DUAL POSITION AIR 27.5 BOOST™ COMPATIBLE 15X110 42 OFF-SET ALUMINUM TAPER BLACK (NO GRADIENTS) - LYRIK B1+/YARI A1+
2	11.4018.008.459	FORK CSU - DUAL POSITION AIR 2927+ BOOST™ COMPATIBLE 15X110 51 OFF-SET ALUMINUM TAPER BLACK (NO GRADIENTS) - LYRIK B1+/YARI A1+/PIKE 29+
2	11.4018.090.052	FORK CSU - DEBONAIR 27.5/29B 44 OFF-SET - 69OD - 1.5 TAPER GLOSS BLACK (NO GRADIENTS) - LYRIK C2+/YARI B2+ TREK LC (2019+)
2	11.4018.090.053	FORK CSU - DEBONAIR 27.5/29B 44 OFF-SET - 69OD - 1.5 TAPER DIFFUSION BLACK (NO GRADIENTS) - LYRIK C2+/YARI B2+ TREK LC (2019+)
2	11.4018.090.054	FORK CSU - DEBONAIR 27.5/29B 44 OFF-SET - 69OD - 1.8 TAPER GLOSS BLACK (NO GRADIENTS) - LYRIK C3+/YARI B3+ (2020+)
2	11.4018.090.055	FORK CSU - DEBONAIR 27.5/29B 44 OFF-SET - 69OD - 1.8 TAPER DIFFUSION BLACK (NO GRADIENTS) - LYRIK C3+/YARI B3+ (2020+)
2	11.4018.090.056	FORK CSU - DUAL POSITION AIR 27.5/29B 44 OFF-SET - 69OD - 1.8 TAPER GLOSS BLACK (NO GRADIENTS) - LYRIK C3+/YARI B3+ (2020+)
2	11.4018.090.057	FORK CSU - DUAL POSITION AIR 27.5/29B 44 OFF-SET - 69OD - 1.8 TAPER DIFFUSION BLACK (NO GRADIENTS) - LYRIK C3+/YARI B3+ (2020+)
	DAMPER	
4	11.4015.547.160	FORK COMPRESSION DAMPER KNOB KIT - CROWN MOCO (INCLUDES KNOB & SCREW) - YARI
5	11.4015.544.380	FORK COMPRESSION DAMPER - CROWN, MOCO (INCLUDES COMPRESSION KNOB & BOLT) - YARI A1+ (2016+)
6	11.4018.009.079	FORK DAMPER ASSEMBLY - CROWN MOCO RL (INCLUDES RIGHT SIDE INTERNALS) - YARI A1+ (2016+)
7	11.4015.404.027	FORK REBOUND DAMPER KNOB KIT - (INCLUDES ADJUSTER KNOB & BOLT) - YARI
	SPRING	
8	11.4018.012.010	FORK SPRING AIR TOP CAP - 35MM (.5MM THREAD PITCH) BOOST™ 15X110 - PIKE A2/LYRIK A1+/YARI A1+/REVELATION A1+(2018+)/PIKE DJ (2017+)
10	11.4018.026.005	FORK SPRING DUAL POSITION AIR SHAFT - 160MM-26, 150MM-27.5, 150MM-29+, 150MM - PIKE A1-A2 (2014-2017)/YARI A1+/LYRIK B1+
10	11.4018.026.006	FORK SPRING DUAL POSITION AIR SHAFT - 160MM-27.5, 160MM-29+, 160MM- PIKE A1-A2 (2014-2017)/YARI A1+/LYRIK B1+
10	11.4018.026.009	FORK SPRING DUAL POSITION AIR SHAFT - 150MM-29, 170MM-29+, 170MM- PIKE A1-A2 (2014-2017)/YARI A1+/LYRIK B1+
10	11.4018.026.007	FORK SPRING DUAL POSITION AIR SHAFT - 160MM-29, 180MM-29+, 180MM-LYRIK/YARI -PIKE A1-A2 (2014-2017)/YARI A1+/LYRIK B1+
11	11.4018.032.000	FORK SPRING BOTTOMLESS TOKENS - 35MM/38MM SOLO AIR/DEBONAIR (QTY 3) - PIKE/BOXXER B1/LYRIK B1/YARI/SID 35MM/ZEB
11	11.4018.032.001	FORK SPRING BOTTOMLESS TOKENS - 35MM/38MM SOLO AIR/DEBONAIR (QTY 10) PIKE/BOXXER B1/LYRIK B1/YARI/SID 35MM/ZEB
12	11.4018.032.004	FORK SPRING BOTTOMLESS TOKENS - 35MM/38MM DUAL POSITION AIR (QTY 3) - PIKE A1-A2/LYRIK B1+/YARI A1+/ZEB
12	11.4018.032.005	FORK SPRING BOTTOMLESS TOKENS - 35MM/38MM DUAL POSITION AIR (QTY 10) - PIKE A1-A2/LYRIK B1+/YARI A1+/ZEB
9	11.4018.120.000	FORK SPRING DUAL POSITION AIR KNOB - REVELATION A1+/PIKE A1+/LYRIK A1+/YARI A1+/ZEB A1+
	SPARES	
13	11.4015.534.010	FORK HOSE CLAMP - PIKE/LYRIK/YARI/SID/REVELATION/BOXXER/XC30/30G/30S/RECON/SEKTOR/BLUTO/REBA/35G/35S
14	11.4308.327.002	AIR VALVE KIT - SCHRADER CORE (QTY 2) - FORKS/SHOCKS/REVERB
15	11.4018.028.005	FORK FOAM RING KIT - 35MM X 6MM (QTY 20) - PIKE/LYRIK B1/YARI/BOXXER/DOMAIN DUAL CROWN
16	11.4015.403.100	FORK SHAFT FASTENER KIT - (INCLUDES SHAFT BOLTS & CRUSH WASHERS) - YARI A1+ (2016+), LYRIK A1-A2 (2010-2016), SID B1-C1 (2021), REVELATION RC A1-A2 (2018-2020)
	TOOLS/GREASE/FLUIDS	
ns	00.4318.032.000	FORK LOWER LEG DUST SEAL INSTALLATION TOOL 35MM (FOR FLANGELESS AND FLANGED DUST SEALS)
ns	00.4315.023.010	HIGH-PRESSURE FORK/SHOCK PUMP (300 PSI MAX) ROCKSHOX
ns	00.4315.023.040	HIGH-PRESSURE FORK/SHOCK PUMP (300 PSI MAX) ROCKSHOX DIGITALGAUGE
ns	00.4315.022.010	REAR SHOCK SCHRADER VALVE REMOVAL TOOL ROCKSHOX
ns	11.4315.021.080	ROCKSHOX SUSPENSION OIL, 0W-30, 120ML BOTTLE - PIKE/REVELATION 2018+/LYRIK B1/YARI/SID 2020+ LOWER LEGS
ns	11.4015.354.050	ROCKSHOX SUSPENSION OIL, 0-W30, 1 LITER BOTTLE - PIKE/REVELATION 2018+/LYRIK B1/YARI/SID 2020+ LOWER LEGS
ns	11.4115.094.030	MAXIMA SUSPENSION OIL PLUSH, 3WT 1 LITER BOTTLE - REAR SHOCK/CHARGER DAMPER
ns	11.4318.010.000	FORK BLEED KIT - CHARGER 1 DAMPER FITTING (FOR BLEEDING CHARGER 1 DAMPERS) - BOXXER 35MM B1-B2 (2015-2018)/PIKE A1-A2 (2014-2017)/LYRIK RCT3 A1, RC B1 (2016-2017)
ns	00.4318.007.000	RockShox Charger Damper Standard Bleed Kit (includes Syringe, Charger1 fitting, Standard fitting, Suspension Oil 3w) - Charger/RaceDay dampers
ns	00.4318.008.002	GREASE ROCKSHOX DYNAMIC SEAL GREASE (PTFE) 1OZ - RECOMMENDED FOR SERVICING REAR SHOCKS & FORKS
ns	00.4318.008.004	GREASE ROCKSHOX DYNAMIC SEAL GREASE 500ML - RECOMMENDED FOR SERVICING REAR SHOCKS & FORKS

LYRIK SELECT/SELECT+/ULTIMATE C2 (2020)

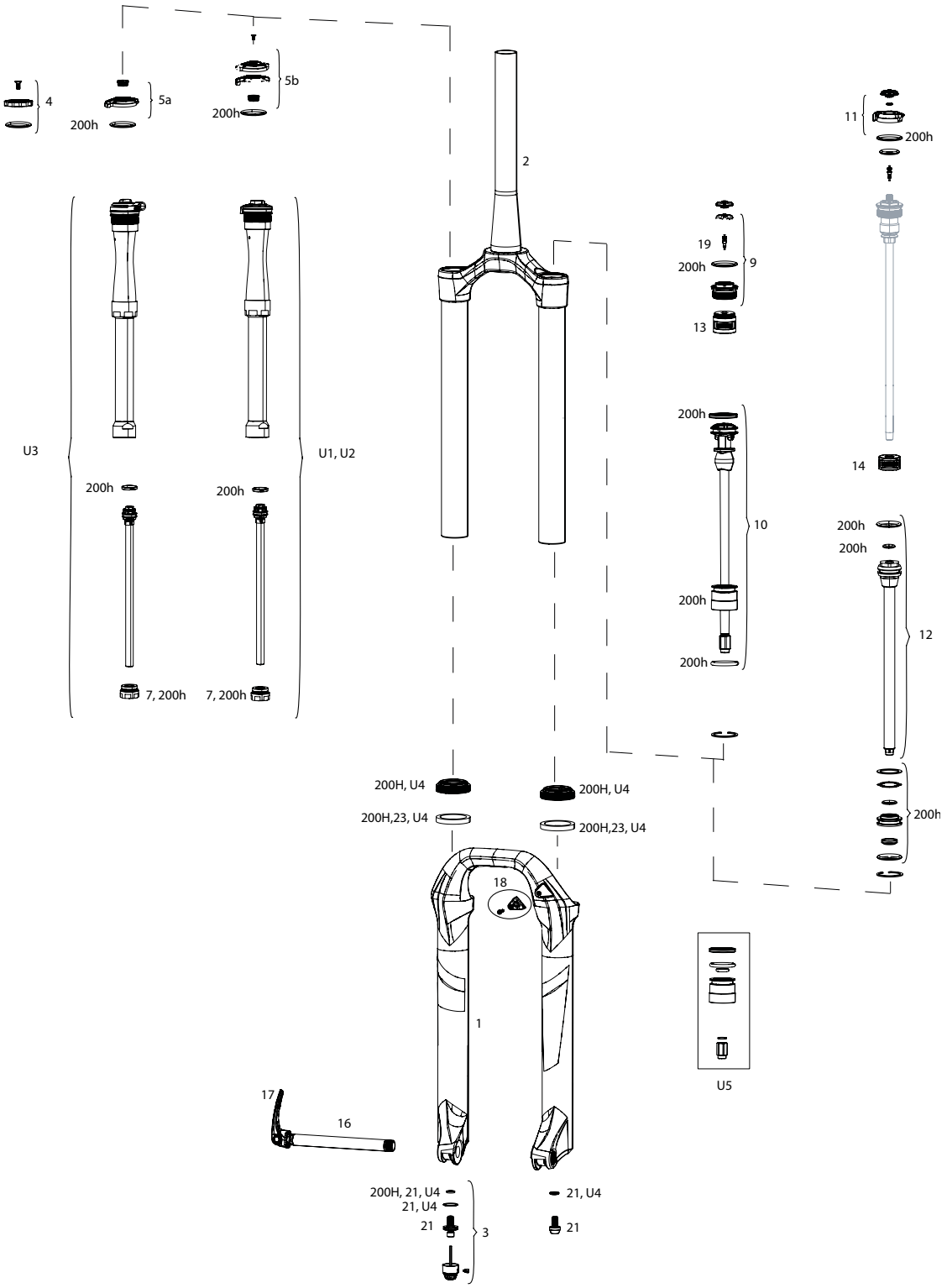

Note:

1. 200h service kits include replaceable o-rings, glide rings, retaining rings, crush washers, sealheads, lower leg seals and foam rings. See www.sram.com/service for more information.
2. For Travel Change, see the respective pages in this catalog, listed in the Index.
3. Lyrik CSU's do not come with gradients printed on the stanchion tubes.
4. A complete decal and maxle overview can be found in back of the catalog.

LYRIK SELECT/SELECT+/ULTIMATE C2-C3 (2020-2021)

U1	00.4020.170.000	DAMPER UPGRADE KIT - CHARGER2.1 RC2 CROWN HIGH SPEED, LOW SPEED COMPRESSION (INCLUDES COMPLETE RIGHT SIDE INTERNALS) - LYRIK/YARI (A1+/2016+)/PIKE 29+(A2-B1/2017-2019)
U2	00.4020.170.001	DAMPER UPGRADE KIT - CHARGER2.1 RCT3 CROWN (INCLUDES COMPLETE RIGHT SIDE INTERNALS) - LYRIK/YARI (A1+/2016+)/PIKE 29+(A2-B1/2017-2019)
U3	00.4018.783.020	DAMPER UPGRADE KIT - CHARGER2 RCT REMOTE (INCLUDES COMPLETE RIGHT SIDE INTERNALS & ONELOC REMOTE) - LYRIK/YARI (A1+/2016+)/PIKE 29+(A2-B1/2017-2019)
U4	00.4318.045.004	FORK DUST WIPER UPGRADE KIT - 35MM BLACK FLANGELESS ULTRA-LOW FRICTION SKF SEALS (INCLUDES DUST WIPERS, 4MM & 6MM FOAM RINGS-PIKE/LYRIKB1/YARI/REVELATION/BOXXER/DOMAIN/35/SID35MM
U5	00.4020.573.000	SEAL HEAD UPGRADE KIT - DEBONAIR C1 35MM SEAL HEAD (INCLUDES SEAL HEAD & SPECIFIC NUT) - LYRIK RC C2+,RCT3 C1+(2019+)/YARI B1+/PIKE B2+/REVELATION A2+ (2019+)
10	00.4020.572.000	AIR SPRING UPGRADE KIT - DEBONAIR C1 180MM (INCLUDES DEBONAIRASSEMBLY, SEAL HEAD) - LYRIK/YARI A1+ (2016+)
10	00.4020.572.001	AIR SPRING UPGRADE KIT - DEBONAIR C1 170MM (INCLUDES DEBONAIRASSEMBLY, SEAL HEAD) - LYRIK/YARI A1+ (2016+)
10	00.4020.572.002	AIR SPRING UPGRADE KIT - DEBONAIR C1 160MM (INCLUDES DEBONAIRASSEMBLY, SEAL HEAD) - LYRIK/YARI A1+ (2016+)
10	00.4020.572.003	AIR SPRING UPGRADE KIT - DEBONAIR C1 150MM (INCLUDES DEBONAIRASSEMBLY, SEAL HEAD) - LYRIK/YARI A1+ (2016+)
	SERVICE	
200h	00.4318.025.120	200 HOUR/1 YEAR SERVICE KIT (INCLUDES DUST SEALS, FOAM RINGS, O-RING SEALS, CHGR2.1 DAMPER SEALHEAD, DB AIR SPRING SEALHEAD) - LYRIK C2/PIKE B3 SEL+ AND ULT (2020)
200h	00.4318.025.180	200 HOUR/1 YEAR SERVICE KIT (INCLUDES DUST SEALS, FOAM RINGS, O-RINGS, DAMPER SEALHEAD, DB C1 SEALHD)-YARI CHRC B1+/RC B2-B3/PIKE B3+/LYRIK C2+ SELECT/REVELATION CHRC A1+/RC A2-A3
	LOWER LEG	
1	11.4018.095.004	FORK LOWER LEG - (DECALS NOT INCLUDED) 29 15X110 BOOST™ DIFFUSION BLACK - LYRIK B1+(2016+)/YARI A1+ (2016+)
1	11.4018.095.006	FORK LOWER LEG - (DECALS NOT INCLUDED) 27 15X110 BOOST™ DIFFUSION BLACK - LYRIK B1+(2016+)/YARI A1+ (2016+)
1	11.4018.091.016	FORK LOWER LEG - (FOIL DECALS INCLUDED) 27 15X110 BOOST™ GLOSS BLACK - LYRIK (2020+)
1	11.4018.091.017	FORK LOWER LEG - (FOIL DECALS INCLUDED) 29 15X110 BOOST™ GLOSS BLACK - LYRIK (2020+)
1	11.4018.091.018	FORK LOWER LEG - (FOIL DECALS INCLUDED) 27 15X110 BOOST™ RED - LYRIK (2020+)
1	11.4018.091.019	FORK LOWER LEG - (FOIL DECALS INCLUDED) 29 15X110 BOOST™ RED - LYRIK (2020+)
	CSU BOOST	
2	11.4018.008.453	FORK CSU - DUAL POSITION AIR 27.5 BOOST™ COMPATIBLE 15X110 42 OFF-SET ALUMINUM TAPER BLACK (NO GRADIENTS) - LYRIK B1+/YARI A1+
2	11.4018.008.455	FORK CSU - DUAL POSITION AIR 27.5 BOOST™ COMPATIBLE 15X110 42 OFF-SET ALUMINUM TAPER DIFFUSION BLACK (NO GRADIENTS) - LYRIK B1+/YARI A1+
2	11.4018.008.459	FORK CSU - DUAL POSITION AIR 2927+ BOOST™ COMPATIBLE 15X110 51 OFF-SET ALUMINUM TAPER BLACK (NO GRADIENTS) - LYRIK B1+/YARI A1+/PIKE 29+
2	11.4018.008.461	FORK CSU - DUAL POSITION AIR 2927+ BOOST™ COMPATIBLE 15X110 51 OFF-SET ALUMINUM TAPER DIFFUSION BLACK (NO GRADIENTS) - LYRIK B1+/YARI A1+/PIKE 29+
2	11.4018.090.001	FORK CSU - DEBONAIR 27.5/29 46 OFF-SET ALUMINUM TAPER DIFFUSION BLACK (NO GRADIENTS) LYRIK/YARI (2017+)
2	11.4018.090.003	FORK CSU - DEBONAIR 27.5/29 37 OFF-SET ALUMINUM TAPER DIFFUSION BLACK (NO GRADIENTS) LYRIK/YARI (2017+)
2	11.4018.090.005	FORK CSU - DEBONAIR 27.5/29 42 OFF-SET ALUMINUM TAPER DIFFUSION BLACK (NO GRADIENTS) LYRIK/YARI (2017+)
2	11.4018.090.007	FORK CSU - DEBONAIR 27.5/29 51 OFF-SET ALUMINUM TAPER DIFFUSION BLACK (NO GRADIENTS) LYRIK/YARI (2017+)
2	11.4018.090.018	FORK CSU - DEBONAIR 29 BOOST 42 OFF-SET ALUMINUM TAPER GLOSS BLACK (NO GRADIENTS) LYRIK ULTIMATE (2020+)
2	11.4018.090.029	FORK CSU - DEBONAIR 27.5 BOOST 46 OFF-SET ALUMINUM TAPER GLOSS BLACK (NO GRADIENTS) LYRIK ULTIMATE (2020+)
2	11.4018.090.030	FORK CSU - DEBONAIR 27.5 BOOST 37 OFF-SET ALUMINUM TAPER GLOSS BLACK (NO GRADIENTS) LYRIK ULTIMATE (2020+)
2	11.4018.090.031	FORK CSU - DEBONAIR 29 BOOST 51 OFF-SET ALUMINUM TAPER GLOSS BLACK (NO GRADIENTS) LYRIK ULTIMATE (2020+)
2	11.4018.090.052	FORK CSU - DEBONAIR 27.5/29B 44 OFF-SET - 69OD - 1.5 TAPER GLOSS BLACK (NO GRADIENTS) - LYRIK C2+/YARI B2+ TREK LC (2019+)
2	11.4018.090.053	FORK CSU - DEBONAIR 27.5/29B 44 OFF-SET - 69OD - 1.5 TAPER DIFFUSION BLACK (NO GRADIENTS) - LYRIK C2+/YARI B2+ TREK LC (2019+)
2	11.4018.090.054	FORK CSU - DEBONAIR 27.5/29B 44 OFF-SET - 69OD - 1.8 TAPER GLOSS BLACK (NO GRADIENTS) - LYRIK C3+/YARI B3+ (2020+)
2	11.4018.090.055	FORK CSU - DEBONAIR 27.5/29B 44 OFF-SET - 69OD - 1.8 TAPER DIFFUSION BLACK (NO GRADIENTS) - LYRIK C3+/YARI B3+ (2020+)
2	11.4018.090.056	FORK CSU - DUAL POSITION AIR 27.5/29B 44 OFF-SET - 69OD - 1.8 TAPER GLOSS BLACK (NO GRADIENTS) - LYRIK C3+/YARI B3+ (2020+)
2	11.4018.090.057	FORK CSU - DUAL POSITION AIR 27.5/29B 44 OFF-SET - 69OD - 1.8 TAPER DIFFUSION BLACK (NO GRADIENTS) - LYRIK C3+/YARI B3+ (2020+)
	DAMPER	
3	11.4018.082.004	FORK REBOUND DAMPER KNOB KIT - (INCLUDES ADJUSTER KNOB & BOLT) - CHARGER RC2/RCT2/RCT R - LYRIK, PIKE, BOXXER, ZEB
4	11.4018.082.006	FORK COMPRESSION DAMPER KNOB KIT - CHRC CROWN- LYRIK RC SELECT+ C2 (2020+)/PIKE RC SELECT+ B3 (2020+)/BOXXER RC C1/RC SELECT C2 (2019+)
5a	11.4018.082.005	FORK COMPRESSION DAMPER KNOB KIT - CHARGER 2/2.1 RC2 CROWN - LYRIK RC2 C1/ULTIMATE RC2 C2 (2019+)/PIKE RC2 ULTIMATE B3 (2020+)
5b	11.4015.547.090	FORK COMPRESSION DAMPER KNOB KIT - CROWN CHARGER RCT3 (INCLUDES KNOB & SCREW) - LYRIK B1/PIKE
7	11.4018.107.000	FORK DAMPER SEALHEAD ASSEMBLY - CHARGER 2.1 - LYRIK RCT3 B1+/RC C1+, PIKE RCT3 B1+/RC2 C1+, BOXXER RC2 C1+, LYRIK/PIKE/BOXXER SELECT/SELECT+/ULTIMATE (RC2/RCT3) C2+
7	11.4018.107.001	FORK DAMPER SEALHEAD ASSEMBLY - CHARGER 2.1 - LYRIK RCT3 B1+/RC C1+, PIKE RCT3 B1+/RC2 C1+, BOXXER RC2 C1+, LYRIK/PIKE/BOXXER SELECT/SELECT+/ULTIMATE (RC2/RCT3) C2 - BULK, QTY10
	SPRING	
9	11.4018.083.000	FORK SPRING AIR TOP CAP - 35MM (.5MM THREAD PITCH) BOOST™ 15X110 (INCLUDES SPLINED TOP CAP & VALVE COVER) - LYRIK A1+/YARI A1+/PIKE B1+/REVELATION A1+(35MM)/BOXXER 35MM/SID35MM
11	11.4018.120.000	FORK SPRING DUAL POSITION AIR KNOB - REVELATION A1+/PIKE A1+/LYRIK A1+/YARI A1+/ZEB A1+
12	11.4018.026.005	FORK SPRING DUAL POSITION AIR SHAFT - 160MM-26, 150MM-27.5, 150MM-29+, 150MM - PIKE A1-A2 (2014-2017)/YARI A1+/LYRIK B1+
12	11.4018.026.006	FORK SPRING DUAL POSITION AIR SHAFT - 160MM-27.5, 160MM-29+, 160MM- PIKE A1-A2 (2014-2017)/YARI A1+/LYRIK B1+
12	11.4018.026.009	FORK SPRING DUAL POSITION AIR SHAFT - 150MM-29, 170MM-29+, 170MM- PIKE A1-A2 (2014-2017)/YARI A1+/LYRIK B1+
12	11.4018.026.007	FORK SPRING DUAL POSITION AIR SHAFT - 160MM-29, 180MM-29+, 180MM-LYRIK/YARI -PIKE A1-A2 (2014-2017)/YARI A1+/LYRIK B1+
13	11.4018.032.000	FORK SPRING BOTTOMLESS TOKENS - 35MM/38MM SOLO AIR/DEBONAIR (QTY 3) - PIKE/BOXXER B1/LYRIK B1/YARI/SID 35MM/ZEB
13	11.4018.032.001	FORK SPRING BOTTOMLESS TOKENS - 35MM/38MM SOLO AIR/DEBONAIR (QTY 10) PIKE/BOXXER B1/LYRIK B1/YARI/SID 35MM/ZEB
14	11.4018.032.004	FORK SPRING BOTTOMLESS TOKENS - 35MM/38MM DUAL POSITION AIR (QTY 3) - PIKE A1-A2/LYRIK B1+/YARI A1+/ZEB
14	11.4018.032.005	FORK SPRING BOTTOMLESS TOKENS - 35MM/38MM DUAL POSITION AIR (QTY 10) - PIKE A1-A2/LYRIK B1+/YARI A1+/ZEB
	MAXLE	
16	00.4318.005.007	AXLE MAXLE ULTIMATE FRONT, 15X110, LENGTH 156.5MM, THREAD LENGTH 9MM, THREAD PITCH M15X1.50 - PIKE, LYRIK B1, YARI BOOST COMPATIBLE
17	11.4318.004.000	AXLE MAXLE - ULTIMATE LEVER ASSEMBLY B1
	SPARES	
18	11.4015.534.010	FORK HOSE CLAMP - PIKE/LYRIK/YARI/SID/REVELATION/BOXXER/XC30/30G/30S/RECON/SEKTOR/BLUTO/REBA/35G/35S
19	11.4308.327.002	AIR VALVE KIT - SCHRADER CORE (QTY 2) - FORKS/SHOCKS/REVERB
21	11.4015.403.090	FORK SHAFT FASTENER KIT - (INCLUDES SHAFT BOLTS & CRUSH WASHERS) - LYRIK RCT3 A1+, RC B1+,RC2 C1+ (2016+)/PIKE 29+ (2017/BOXXER C1+ (2019+), ZEB A1 (2021)
22	11.4015.259.000	FORK CRUSH WASHERS - 8MM (QTY 50)
23	11.4018.028.005	FORK FOAM RING KIT - 35MM X 6MM (QTY 20) - PIKE/LYRIK B1/YARI/BOXXER/DOMAIN DUAL CROWN
	TOOLS/GREASE/FLUIDS	
ns	00.4318.032.000	FORK LOWER LEG DUST SEAL INSTALLATION TOOL 35MM (FOR FLANGELESS AND FLANGED DUST SEALS)
ns	00.4315.023.010	HIGH-PRESSURE FORK/SHOCK PUMP (300 PSI MAX) ROCKSHOX
ns	00.4315.023.040	HIGH-PRESSURE FORK/SHOCK PUMP (300 PSI MAX) ROCKSHOX DIGITALGAUGE
ns	00.4315.022.010	REAR SHOCK SCHRADER VALVE REMOVAL TOOL ROCKSHOX
ns	11.4315.021.080	ROCKSHOX SUSPENSION OIL, 0W-30, 120ML BOTTLE - PIKE/REVELATION 2018+/LYRIK B1/YARI/SID 2020+ LOWER LEGS
ns	11.4015.354.050	ROCKSHOX SUSPENSION OIL, 0-W30, 1 LITER BOTTLE - PIKE/REVELATION 2018+/LYRIK B1/YARI/SID 2020+ LOWER LEGS
ns	11.4115.094.030	MAXIMA SUSPENSION OIL PLUSH, 3WT 1 LITER BOTTLE - REAR SHOCK/CHARGER DAMPER
ns	00.4318.007.000	RockShox Charger Damper Standard Bleed Kit (includes Syringe, Charger1 fitting, Standard fitting, Suspension Oil 3w) - Charger/RaceDay dampers
ns	00.4318.008.002	GREASE ROCKSHOX DYNAMIC SEAL GREASE (PTFE) 10Z - RECOMMENDED FOR SERVICING REAR SHOCKS & FORKS
ns	00.4318.008.004	GREASE ROCKSHOX DYNAMIC SEAL GREASE 500ML - RECOMMENDED FOR SERVICING REAR SHOCKS & FORKS

LYRIK RCT3 (A1-C1)/RC (B1-C2)/RC2 (C1) (2016-2019)

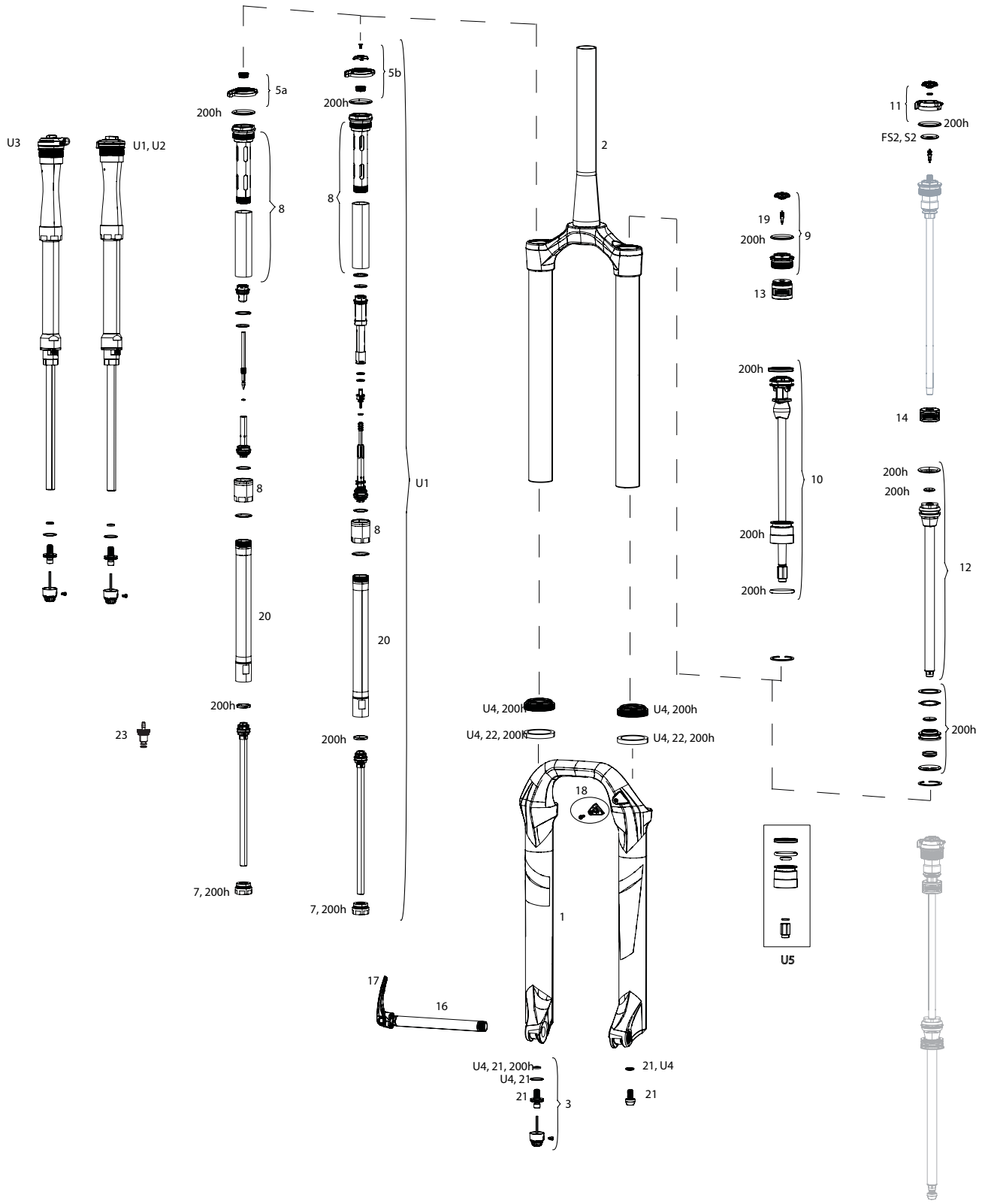

Note:

1. 200h service kits include replaceable o-rings, glide rings, retaining rings, crush washers, sealheads, lower leg seals and foam rings. See www.sram.com/service for more information.
2. For Travel Change, see the respective pages in this catalog, listed in the Index.
3. Lyrik CSU's do not come with gradients printed on the stanchion tubes.
4. A complete decal and maxle overview can be found in back of the catalog.

LYRIK RCT3 (A1-C1)/RC (B1-C2)/RC2 (C1) (2016-2019)

	UPGRADE	
U1	00.4020.170.000	DAMPER UPGRADE KIT - CHARGER2.1 RC2 CROWN HIGH SPEED, LOW SPEED COMPRESSION (INCLUDES COMPLETE RIGHT SIDE INTERNALS) - LYRIK/YARI (A1+/2016+)/PIKE 29+(A2-B1/2017-2019)
U2	00.4020.170.001	DAMPER UPGRADE KIT - CHARGER2.1 RCT3 CROWN (INCLUDES COMPLETE RIGHT SIDE INTERNALS) - LYRIK/YARI (A1+/2016+)/PIKE 29+(A2-B1/2017-2019)
U3	00.4018.783.020	DAMPER UPGRADE KIT - CHARGER2 RCT REMOTE (INCLUDES COMPLETE RIGHT SIDE INTERNALS & ONELOC REMOTE) - LYRIK/YARI (A1+/2016+)/PIKE 29+(A2-B1/2017-2019)
U4	00.4318.045.004	FORK DUST WIPER UPGRADE KIT - 35MM BLACK FLANGELESS ULTRA-LOW FRICTION SKF SEALS (INCLUDES DUST WIPERS, 4MM & 6MM FOAM RINGS-PIKE/LYRIKB1/YARI/REVELATION/BOXXER/DOMAIN/35/SID35MM
U5	00.4020.573.000	SEAL HEAD UPGRADE KIT - DEBONAIR C1 35MM SEAL HEAD (INCLUDES SEAL HEAD & SPECIFIC NUT) - LYRIK RC C2+,RCT3 C1+(2019+)/YARI B1+/PIKE B2+/REVELATION A2+ (2019+)
10	00.4020.572.000	AIR SPRING UPGRADE KIT - DEBONAIR C1 180MM (INCLUDES DEBONAIRASSEMBLY, SEAL HEAD) - LYRIK/YARI A1+ (2016+)
10	00.4020.572.001	AIR SPRING UPGRADE KIT - DEBONAIR C1 170MM (INCLUDES DEBONAIRASSEMBLY, SEAL HEAD) - LYRIK/YARI A1+ (2016+)
10	00.4020.572.002	AIR SPRING UPGRADE KIT - DEBONAIR C1 160MM (INCLUDES DEBONAIRASSEMBLY, SEAL HEAD) - LYRIK/YARI A1+ (2016+)
10	00.4020.572.003	AIR SPRING UPGRADE KIT - DEBONAIR C1 150MM (INCLUDES DEBONAIRASSEMBLY, SEAL HEAD) - LYRIK/YARI A1+ (2016+)
	SERVICE	
200h	00.4315.032.620	200 HOUR/1 YEAR SERVICE KIT (INCLUDES DUST SEALS, FOAM RINGS, O-RING SEALS, CHARGER SEALHEAD, DPA SEALHEAD) - LYRIK/PIKE 29+ DUAL POSITION AIR A1 (2016-2017)
200h	00.4315.032.621	200 HOUR/1 YEAR SERVICE KIT (INCLUDES DUST SEALS, FOAM RINGS, O-RING SEALS, CHARGER SEALHEAD, SA SEALHEAD) - LYRIK/PIKE29+ SOLO AIR A1(2016-2017)
200h	00.4318.025.020	200 HOUR/1 YEAR SERVICE KIT (INCLUDES DUST SEALS, FOAM RINGS, O-RING SEALS, CHARGER 2 SEALHEAD, ALUMINUM DEBONAIR SEALHEAD) - LYRIK RC2 C1 (2019+)
200h	00.4315.032.645	200 HOUR/1 YEAR SERVICE KIT (INCLUDES DUST SEALS, FOAM RINGS, O-RING SEALS, CHARGER 2 SEALHEAD, DUAL POSITION SEALS) - LYRIK B1/PIKE 29+ (2018+)
	LOWER LEG	
1	11.4018.006.240	FORK LOWER LEG - (DECALS NOT INCLUDED) 27 15X100 BLACK - LYRIK B1+(2016+)/YARI A1+ (2016+)
1	11.4018.006.242	FORK LOWER LEG - (DECALS NOT INCLUDED) 27 15X100 DIFFUSION BLACK - LYRIK B1+(2016+)/YARI A1+ (2016+)
1	11.4018.006.245	FORK LOWER LEG - (DECALS NOT INCLUDED) 29 15X100 DIFFUSION BLACK - LYRIK B1+(2016+)/YARI A1+ (2016+)
1	11.4018.095.004	FORK LOWER LEG - (DECALS NOT INCLUDED) 29 15X110 BOOST™ DIFFUSION BLACK - LYRIK B1+(2016+)/YARI A1+ (2016+)
1	11.4018.095.005	FORK LOWER LEG - (DECALS NOT INCLUDED) 29 15X110 BOOST™ BLACK - LYRIK B1+(2016+)/YARI A1+ (2016+)
1	11.4018.095.006	FORK LOWER LEG - (DECALS NOT INCLUDED) 27 15X110 BOOST™ DIFFUSION BLACK - LYRIK B1+(2016+)/YARI A1+ (2016+)
1	11.4018.095.007	FORK LOWER LEG - (DECALS NOT INCLUDED) 27 15X110 BOOST™ BLACK - LYRIK B1+(2016+)/YARI A1+ (2016+)
1	11.4018.006.245	FORK LOWER LEG - (DECALS NOT INCLUDED) 29 15X100 DIFFUSION BLACK - LYRIK B1+(2016+)/YARI A1+ (2016+)
1	11.4018.091.002	FORK LOWER LEG - (SILVER DECALS INCLUDED) 27 15X110 BOOST™ RED - LYRIK B1+(2016+)
1	11.4018.091.003	FORK LOWER LEG - (SILVER DECALS INCLUDED) 29 15X110 BOOST™ RED - LYRIK B1+(2016+)
	CSU	
2	11.4018.008.438	FORK CSU - SOLO AIR 27.5 42 OFF-SET ALUMINUM TAPER BLACK (NO GRADIENTS) - LYRIK B1/YARI
2	11.4018.008.440	FORK CSU - SOLO AIR 27.5 42 OFF-SET ALUMINUM TAPER DIFFUSION BLACK (NO GRADIENTS) - LYRIK B1/YARI
2	11.4018.008.446	FORK CSU - SOLO AIR 2951 OFF-SET ALUMINUM TAPER DIFFUSION BLACK (NO GRADIENTS) - LYRIK B1/YARI
2	11.4018.008.443	FORK CSU - DUAL POSITION AIR 27.5 42 OFF-SET ALUMINUM TAPER DIFFUSION BLACK (NO GRADIENTS) - LYRIK B1/YARI
2	11.4018.008.449	FORK CSU - DUAL POSITION AIR 29 51 OFF-SET ALUMINUM TAPER DIFFUSION BLACK (NO GRADIENTS) - LYRIK B1/YARI
2	11.4018.008.441	FORK CSU - DUAL POSITION AIR 27.5 42 OFF-SET ALUMINUM TAPER BLACK (NO GRADIENTS) - LYRIK B1/YARI
	CSU- BOOST	
2	11.4018.008.453	FORK CSU - DUAL POSITION AIR 27.5 BOOST™ COMPATIBLE 15X110 42 OFF-SET ALUMINUM TAPER BLACK (NO GRADIENTS) - LYRIK B1+/YARI A1+
2	11.4018.008.455	FORK CSU - DUAL POSITION AIR 27.5 BOOST™ COMPATIBLE 15X110 42 OFF-SET ALUMINUM TAPER DIFFUSION BLACK (NO GRADIENTS) - LYRIK B1+/YARI A1+
2	11.4018.008.459	FORK CSU - DUAL POSITION AIR 2927+ BOOST™ COMPATIBLE 15X110 51 OFF-SET ALUMINUM TAPER BLACK (NO GRADIENTS) - LYRIK B1+/YARI A1+/PIKE 29+
2	11.4018.008.461	FORK CSU - DUAL POSITION AIR 2927+ BOOST™ COMPATIBLE 15X110 51 OFF-SET ALUMINUM TAPER DIFFUSION BLACK (NO GRADIENTS) - LYRIK B1+/YARI A1+/PIKE 29+
2	11.4018.090.001	FORK CSU - DEBONAIR 27.5/29 46 OFF-SET ALUMINUM TAPER DIFFUSION BLACK (NO GRADIENTS) LYRIK/YARI (2017+)
2	11.4018.090.003	FORK CSU - DEBONAIR 27.5/29 37 OFF-SET ALUMINUM TAPER DIFFUSION BLACK (NO GRADIENTS) LYRIK/YARI (2017+)
2	11.4018.090.005	FORK CSU - DEBONAIR 27.5/29 42 OFF-SET ALUMINUM TAPER DIFFUSION BLACK (NO GRADIENTS) LYRIK/YARI (2017+)
2	11.4018.090.007	FORK CSU - DEBONAIR 27.5/29 51 OFF-SET ALUMINUM TAPER DIFFUSION BLACK (NO GRADIENTS) LYRIK/YARI (2017+)
	DAMPER	
3	11.4018.082.004	FORK REBOUND DAMPER KNOB KIT - (INCLUDES ADJUSTER KNOB & BOLT) - CHARGER RC2/RCT2/RCT R - LYRIK, PIKE, BOXXER, ZEB
5a	11.4015.547.080	FORK COMPRESSION DAMPER KNOB KIT - CROWN CHARGER RC (INCLUDES KNOB & SCREW) - LYRIK B1/PIKE/PIKE DJ A2-A3 (2017+)
5a	11.4018.082.007	FORK COMPRESSION DAMPER KNOB KIT - CROWN CHARGER2 RC (INCLUDES KNOB & SCREW)- LYRIK C1 (2018-2019) /PIKE B1 (2018-2019)
5b	11.4015.547.090	FORK COMPRESSION DAMPER KNOB KIT - CROWN CHARGER RCT3 (INCLUDES KNOB & SCREW) - LYRIK B1/PIKE
7	11.4018.107.000	FORK DAMPER SEALHEAD ASSEMBLY - CHARGER 2.1 - LYRIK RCT3 B1+/RC C1+, PIKE RCT3 B1+/RC2 C1+, BOXXER RC2 C1+, LYRIK/PIKE/BOXXER SELECT/SELECT+/ULTIMATE (RC2/RCT3) C2+
7	11.4018.107.001	FORK DAMPER SEALHEAD ASSEMBLY - CHARGER 2.1 - LYRIK RCT3 B1+/RC C1+, PIKE RCT3 B1+/RC2 C1+, BOXXER RC2 C1+, LYRIK/PIKE/BOXXER SELECT/SELECT+/ULTIMATE (RC2/RCT3) C2 - BULK, QTY10
8	11.4018.031.020	FORK DAMPER CHARGER BLADDER ASSEMBLY - LYRIK RCT3 A1, RC B1/PIKE 29+ RCT3, RC 29+ (2017-2018)
	SPRING	
9	11.4018.083.000	FORK SPRING AIR TOP CAP - 35MM (.5MM THREAD PITCH) BOOST™ 15X110 (INCLUDES SPLINED TOP CAP & VALVE COVER) - LYRIK A1+/YARI A1+/PIKE B1+/REVELATION A1+(35MM)/BOXXER 35MM/SID35MM
11	11.4018.120.000	FORK SPRING DUAL POSITION AIR KNOB - REVELATION A1+/PIKE A1+/LYRIK A1+/YARI A1+/ZEB A1+
12	11.4018.026.005	FORK SPRING DUAL POSITION AIR SHAFT - 160MM-26, 150MM-27.5, 150MM-29+, 150MM - PIKE A1-A2 (2014-2017)/YARI A1+/LYRIK B1+
12	11.4018.026.006	FORK SPRING DUAL POSITION AIR SHAFT - 160MM-27.5, 160MM-29+, 160MM- PIKE A1-A2 (2014-2017)/YARI A1+/LYRIK B1+
12	11.4018.026.009	FORK SPRING DUAL POSITION AIR SHAFT - 150MM-29, 170MM-29+, 170MM- PIKE A1-A2 (2014-2017)/YARI A1+/LYRIK B1+
12	11.4018.026.007	FORK SPRING DUAL POSITION AIR SHAFT - 160MM-29, 180MM-29+, 180MM-LYRIK/YARI -PIKE A1-A2 (2014-2017)/YARI A1+/LYRIK B1+
13	11.4018.032.000	FORK SPRING BOTTOMLESS TOKENS - 35MM/38MM SOLO AIR/DEBONAIR (QTY 3) - PIKE/BOXXER B1/LYRIK B1/YARI/SID 35MM/ZEB
13	11.4018.032.001	FORK SPRING BOTTOMLESS TOKENS - 35MM/38MM SOLO AIR/DEBONAIR (QTY 10) PIKE/BOXXER B1/LYRIK B1/YARI/SID 35MM/ZEB
14	11.4018.032.004	FORK SPRING BOTTOMLESS TOKENS - 35MM/38MM DUAL POSITION AIR (QTY 3) - PIKE A1-A2/LYRIK B1+/YARI A1+/ZEB
14	11.4018.032.005	FORK SPRING BOTTOMLESS TOKENS - 35MM/38MM DUAL POSITION AIR (QTY 10) - PIKE A1-A2/LYRIK B1+/YARI A1+/ZEB

LYRIK RCT3 (A1-C1)/RC (B1-C2)/RC2 (C1) (2016-2019)

	MAXLE	
16	00.4318.005.001	AXLE MAXLE ULTIMATE FRONT, 15X100, LENGTH 146.5MM, THREAD LENGTH 9MM, THREAD PITCH M15X1.50 - PIKE, RS1, LYRIK B1, YARI, SID, SID SL, SID 35MM
16	00.4318.005.007	AXLE MAXLE ULTIMATE FRONT, 15X110, LENGTH 156.5MM, THREAD LENGTH 9MM, THREAD PITCH M15X1.50 - PIKE, LYRIK B1, YARI BOOST COMPATIBLE
17	11.4318.004.000	AXLE MAXLE - ULTIMATE LEVER ASSEMBLY B1
	SPARES	
18	11.4015.534.010	FORK HOSE CLAMP - PIKE/LYRIK/YARI/SID/REVELATION/BOXXER/XC30/30G/30S/RECON/SEKTOR/BLUTO/REBA/35G/35S
19	11.4308.327.002	AIR VALVE KIT - SCHRADER CORE (QTY 2) - FORKS/SHOCKS/REVERB
20	11.4018.063.000	FORK DAMPER TUBE - CHARGER (NEW VERSION WITH TURNED INDICATOR MARK) PIKE A1-A2 (2014-2017)
21	11.4015.403.090	FORK SHAFT FASTENER KIT - (INCLUDES SHAFT BOLTS & CRUSH WASHERS) - LYRIK RCT3 A1+, RC B1+,RC2 C1+ (2016+)/PIKE 29+ (2017/BOXXER C1+ (2019+), ZEB A1 (2021)
bulk	11.4015.259.000	FORK CRUSH WASHERS - 8MM (QTY 50)
22	11.4018.028.005	FORK FOAM RING KIT - 35MM X 6MM (QTY 20) - PIKE/LYRIK B1/YARI/BOXXER/DOMAIN DUAL CROWN
	TOOLS/GREASE/FLUIDS	
ns	00.4318.032.000	FORK LOWER LEG DUST SEAL INSTALLATION TOOL 35MM (FOR FLANGELESS AND FLANGED DUST SEALS)
ns	00.4315.023.010	HIGH-PRESSURE FORK/SHOCK PUMP (300 PSI MAX) ROCKSHOX
ns	00.4315.023.040	HIGH-PRESSURE FORK/SHOCK PUMP (300 PSI MAX) ROCKSHOX DIGITALGAUGE
ns	00.4315.022.010	REAR SHOCK SCHRADER VALVE REMOVAL TOOL ROCKSHOX
ns	11.4315.021.080	ROCKSHOX SUSPENSION OIL, 0W-30, 120ML BOTTLE - PIKE/REVELATION 2018+/LYRIK B1/YARI/SID 2020+ LOWER LEGS
ns	11.4015.354.050	ROCKSHOX SUSPENSION OIL, 0-W30, 1 LITER BOTTLE - PIKE/REVELATION 2018+/LYRIK B1/YARI/SID 2020+ LOWER LEGS
ns	11.4115.094.030	MAXIMA SUSPENSION OIL PLUSH, 3WT 1 LITER BOTTLE - REAR SHOCK/CHARGER DAMPER
23	11.4318.010.000	FORK BLEED KIT - CHARGER 1 DAMPER FITTING (FOR BLEEDING CHARGER 1 DAMPERS) - BOXXER 35MM B1-B2 (2015-2018)/PIKE A1-A2 (2014-2017)/LYRIK RCT3 A1, RC B1 (2016-2017)
ns	00.4318.007.000	RockShox Charger Damper Standard Bleed Kit (includes Syringe, Charger1 fitting, Standard fitting, Suspension Oil 3w) - Charger/RaceDay dampers
ns	00.4318.008.002	GREASE ROCKSHOX DYNAMIC SEAL GREASE (PTFE) 1OZ - RECOMMENDED FOR SERVICING REAR SHOCKS & FORKS
ns	00.4318.008.004	GREASE ROCKSHOX DYNAMIC SEAL GREASE 500ML - RECOMMENDED FOR SERVICING REAR SHOCKS & FORKS

LYRIK A1-A2 (2010-2016)

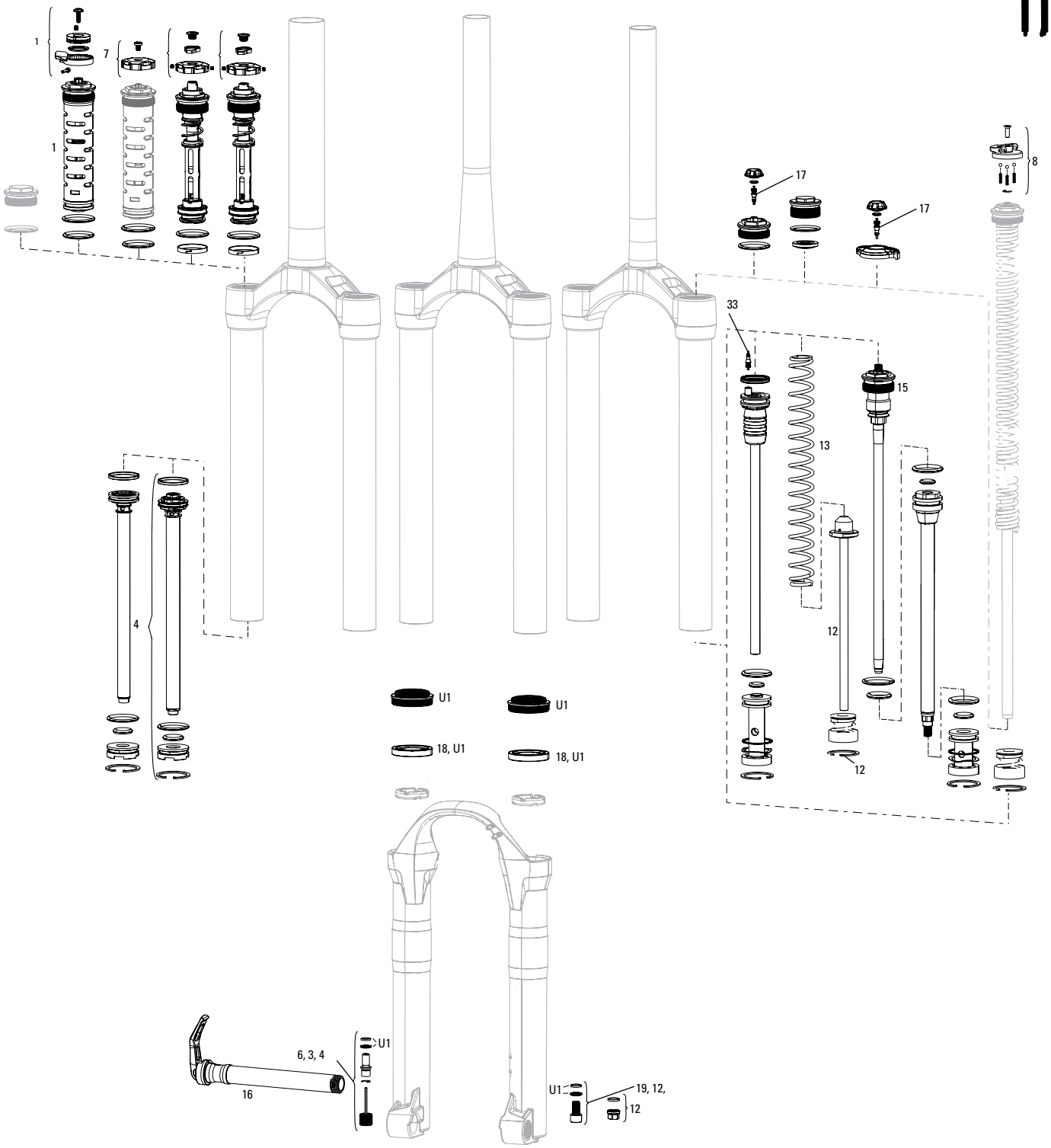

Note:

1. Full service kits include replaceable o-rings, glide rings, retaining rings, crush washers, crush washer retainers and shaft bolts/nuts. All air service kits include replacement schrader valve cores. Not all service parts are pictured. All basic service kits include the following replaceable wear items: o-rings, glide rings, dust seals, and foam rings.
2. All Lyrik models are compatible with Motion Control IS, Mission Control and Mission Control DH dampers.
3. If damper tube needs to be replaced, replace original rebound damper with current rebound damper. 2010+ Lyrik rebound damper assemblies use a larger piston and do not require the 2007-2009 damper tube. 2007-2009 damper tube is not compatible with 2010+ Lyrik.
4. Maxle lever and wedge parts are not compatible with Maxle Lite FR.
5. 2-Step Air replacement parts are no longer available. Replace system with Dual Position Air if parts are needed.
6. Aftermarket forks with Medium spring installed. Soft and Firm tuning springs are included in fork box.

LYRIK A1-A2 (2010-2016)

	UPGRADES	
U1	00.4318.045.004	FORK DUST WIPER UPGRADE KIT - 35MM BLACK FLANGELESS ULTRA-LOW FRICTION SKF SEALS (INCLUDES DUST WIPERS, 4MM & 6MM FOAM RINGS-PIKE/LYRIKB1/YARI/REVELATION/ BOXXER/DOMAIN/35/SID35MM
	SERVICE	
ns	00.4315.032.090	AM FORK SERVICE KIT, BASIC (INCLUDES DUST SEALS, FOAM RINGS, O-RING SEALS) - LYRIK COIL (2012-2015)
ns	00.4315.032.110	AM FORK SERVICE KIT, BASIC (INCLUDES DUST SEALS, FOAM RINGS, O-RING SEALS) - LYRIK DUAL POSITION AIR (2012-2015)
ns	00.4315.032.100	AM FORK SERVICE KIT, BASIC (INCLUDES DUST SEALS, FOAM RINGS, O-RING SEALS) - LYRIK SOLO AIR (2012-2015)
ns	00.4315.032.580	AM FORK SERVICE KIT, BASIC (INCLUDES DUST SEALS, FOAM RINGS,O-RING SEALS) - LYRIK RCT3 SA A1
ns	00.4315.032.590	AM FORK SERVICE KIT, BASIC (INCLUDES DUST SEALS, FOAM RINGS,O-RING SEALS) - LYRIK RCT3 2P A1
ns	11.4015.419.030	FORK SERVICE KIT - SOLO AIR (INCLUDES BOTH 2010-2011 & 2012-2015 AIR SPRING SERVICE PARTS) - LYRIK 2010-2015
ns	11.4015.087.000	FORK DAMPER SERVICE KIT - DAMPER (COMPRESSION/REBOUND) - LYRIK
	DAMPER	
1	11.4015.415.070	FORK COMPRESSION DAMPER - REMOTE 17MM (POPLOC, PRE-2013 PUSHLOC) MOCO RLR 180 - 2011 LYRIK A1-A2(2010-2016)
4	11.4015.416.020	FORK REBOUND DAMPER - CROWN MISSION CONTROL/MISSION CONTROL DH (INCLUDES ADJUSTER KNOB) - LYRIK (2010-2015)
6	11.4015.074.000	FORK REBOUND DAMPER KNOB KIT - (INCLUDES ADJUSTER KNOB & BOLT) - DOMAIN/LYRIK/TOTEM/10-14 BOXXER RC
7	11.4015.367.000	FORK COMPRESSION DAMPER KNOB KIT - CROWN MOCO IS COMPRESSION DAMPER (2010-2016 BOXXER, DOMAIN, LYRIK, TOTEM)
	SPRING	
8	11.4310.717.000	FORK SPRING COIL KNOB - U-TURN TRAVEL ADJUSTER ALUMINUM LEVER
12	11.4015.421.010	FORK SPRING COIL SHAFT ASSY - 170MM - LYRIK A1-A2 (2010- 2016)
13	11.4015.422.030	FORK SPRING COIL - MEDIUM (RED) 170MM - LYRIK A1-A2 (2010- 2016)
13	11.4015.422.040	FORK SPRING COIL - FIRM (BLUE) 170MM - LYRIK A1-A2 (2010- 2016)
13	11.4015.422.050	FORK SPRING COIL - X-FIRM (BLACK) 170MM - LYRIK A1-A2 (2010- 2016)
	SPARES	
16	00.4315.013.030	AXLE MAXLE LITE FRONT MTB 20X110 LENGTH 165MM THREAD LENGTH 9MM THREAD PITCH M20X2.0 - 35MM/40MM CHASSIS (2011-2016)
17	11.4308.327.002	AIR VALVE KIT - SCHRADER CORE (QTY 2) - FORKS/SHOCKS/REVERB
18	11.4018.028.005	FORK FOAM RING KIT - 35MM X 6MM (QTY 20) - PIKE/LYRIK B1/YARI/BOXXER/DOMAIN DUAL CROWN
19	11.4015.403.100	FORK SHAFT FASTENER KIT - (INCLUDES SHAFT BOLTS & CRUSH WASHERS) - YARI A1+ (2016+), LYRIK A1-A2 (2010-2016), SID B1-C1 (2021), REVELATION RC A1-A2 (2018-2020)
bulk	11.4015.259.000	FORK CRUSH WASHERS - 8MM (QTY 50)
bulk	11.4015.260.000	FORK CRUSH WASHER RETAINER - 8MM (QTY 50)
	TOOLS/GREASE/FLUIDS	
ns	00.4318.032.000	FORK LOWER LEG DUST SEAL INSTALLATION TOOL 35MM (FOR FLANGELESS AND FLANGED DUST SEALS)
ns	00.4315.023.010	HIGH-PRESSURE FORK/SHOCK PUMP (300 PSI MAX) ROCKSHOX
ns	00.4315.023.040	HIGH-PRESSURE FORK/SHOCK PUMP (300 PSI MAX) ROCKSHOX DIGITALGAUGE
ns	00.4315.022.010	REAR SHOCK SCHRADER VALVE REMOVAL TOOL ROCKSHOX
ns	11.4315.021.020	ROCKSHOX SUSPENSION OIL, 5WT, 120ML BOTTLE - FORK DAMPER
ns	11.4015.354.010	ROCKSHOX SUSPENSION OIL, 5WT, 1 LITER BOTTLE - FORK DAMPER
ns	11.4315.021.040	ROCKSHOX SUSPENSION OIL, 15WT, 120ML BOTTLE - LOWER LEGS
ns	11.4015.354.030	ROCKSHOX SUSPENSION OIL, 15WT, 1 LITER BOTTLE - LOWER LEGS
ns	00.4318.008.000	GREASE SRAM BUTTER 20ML SYRINGE, FRICTION REDUCING GREASE BYSLICKOLEUM - DOUBLE TIME HUB PAWLS, FORKS & REVERB SERVICE
ns	00.4318.008.001	GREASE SRAM BUTTER 1OZ CONTAINER, FRICTION REDUCING GREASE BY SLICKOLEUM - DOUBLE TIME HUB PAWLS, FORKS & REVERB SERVICE

ARGYLE A1-A2 (2007-2017)

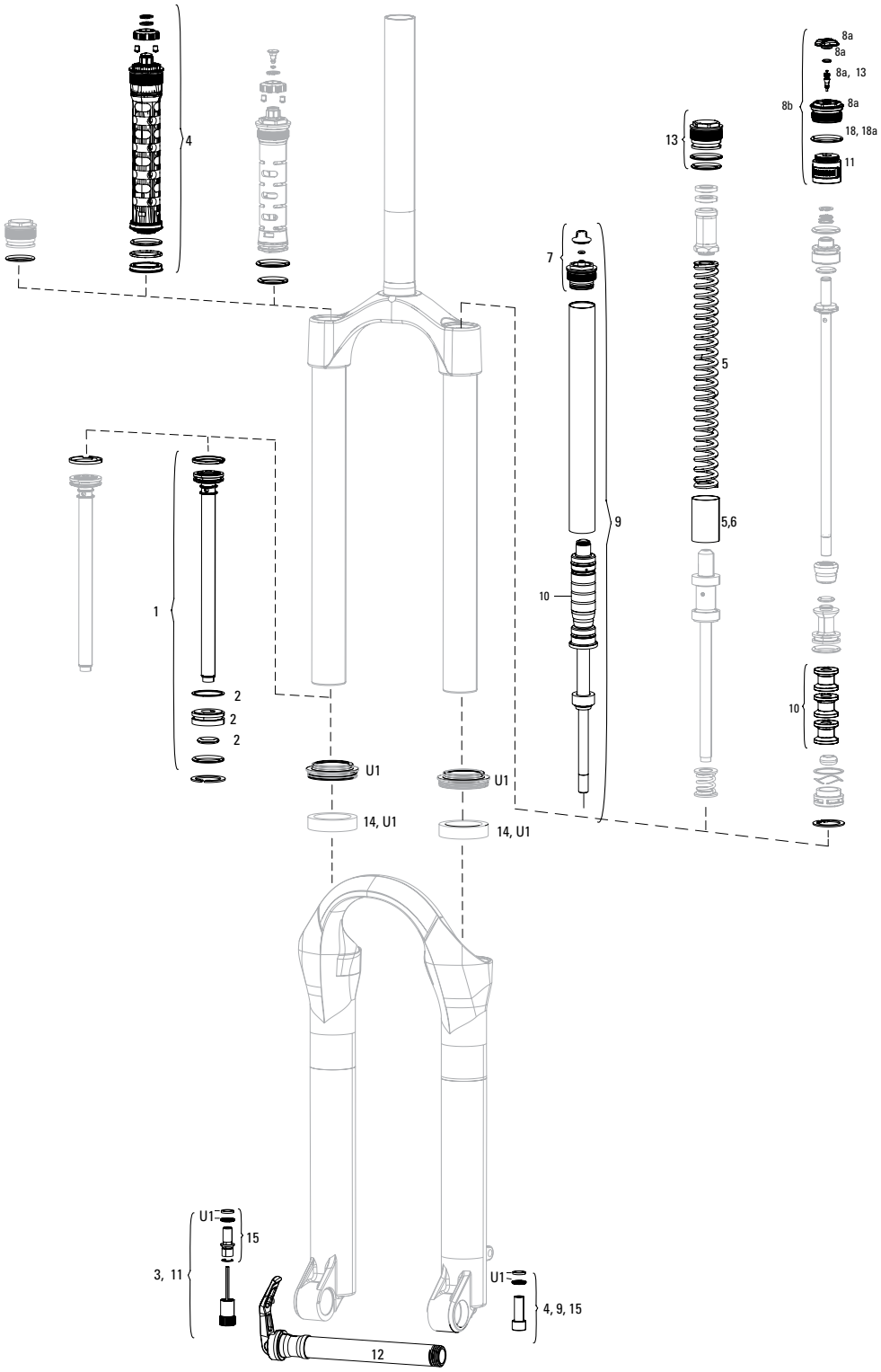

Note:

1. Full service kits include replaceable o-rings, glide rings, retaining rings, crush washers, crush washer retainers and shaft bolts/nuts. All air service kits include replacement schrader valve cores. Not all service parts are pictured. All basic service kits include the following replaceable wear items: o-rings, glide rings, dust seals, and foam rings..
2. Please note top cap, compression damper and air spring kit requirements for steel and aluminum upper tubes.
3. A complete decal and maxle overview can be found in back of the catalog.

ARGYLE A1-A2 (2007-2017)

U1	00.4318.045.002	FORK DUST WIPER UPGRADE KIT - 32MM BLACK FLANGED LOW FRICTION SEALS (INCLUDES DUST WIPERS, 5MM & 10MM FOAM RINGS) - SID/REVELATION/REBA/ARGLE/SEKTOR/TORA/RECON/XC32
	SERVICE	
ns	11.4015.026.000	FORK SERVICE KIT - STEEL UPPER TUBES ONLY- ARGYLE (SOLO AIR & COIL)2007-2010 /ARGYLE (COIL) 2011
ns	11.4015.502.000	FORK SERVICE KIT - SEKTOR/ARGYLE RCT
ns	00.4315.032.200	AM FORK SERVICE KIT, BASIC (INCLUDES DUST SEALS, FOAM RINGS,O-RING SEALS) - ARGYLE COIL (2012-2016)
ns	00.4315.032.210	AM FORK SERVICE KIT, BASIC (INCLUDES DUST SEALS, FOAM RINGS,O-RING SEALS) - ARGYLE SOLO AIR (2012-2016)
	DAMPER	
1	11.4311.116.000	FORK REBOUND DAMPER - (INCLUDES SHAFT BOLT, SEALHEAD & ADJUSTER KNOB) 140MM - PIKE 2005-2010 /REBA 29ER 2005-2008 /REVELATION2009 /RECON 2010 327/335/351/2011 ARGYLE RCT A1-A2
2	11.4015.353.010	FORK DAMPER SEALHEAD ASSEMBLY - MOCO 32MM - SIDA 2009-2014, SIDB 2011-2013, REBA 2009-PRESENT, REVELATION2009-2013, BLUTO RL 2015-PRESENT
3	11.4015.404.010	FORK REBOUND DAMPER KNOB KIT - (INCLUDES ADJUSTER KNOB & BOLT) ALUMINUM RED LONG - (USE WITH MAXLE LOWER LEG)
4	11.4015.017.000	FORK COMPRESSION DAMPER - CROWN MOCO INTERNAL ADJUST GATE (INCLUDES COMPRESSION KNOB & RETAINING RING) - ARGYLE (STEEL UPPER TUBES ONLY)
	SPRING	
5	11.4018.002.001	FORK SPRING COIL - XXX-FIRM (PINK) - ARGYLE
6	11.4309.336.000	FORK SPRING COIL ISOLATOR KIT - (INCLUDES 3 HEAT-SHRINK COIL TUBES) REDUCES NOISE AND CHATTER
7	11.4015.124.000	FORK SPRING AIR TOP CAP - 32MM ASSEMBLY (STEEL UPPER TUBES) - TORA/RECON SILVER/ARGYLE
8a	11.4018.012.000	FORK SPRING AIR TOP CAP - 32 MM (STEEL UPPER TUBES ONLY) - XC32 A1-A3/RECON SILVER TK A1-B1/ARGYLE A1-A2
8a	11.4018.012.001	FORK SPRING AIR TOP CAP - 32MM (ALUMINUM UPPER TUBES ONLY) - RECON GOLD A1-A3/SEKTOR A1-B1
8b	11.4018.012.006	FORK SPRING AIR TOP CAP - 32MM (ALUMINUM UPPER TUBES ONLY, BOTTOMLESS TOKEN COMPATIBLE) - REBA A1-A5/SIDA1-A4/REVELATION A1-A4/RS-1 A+/BLUTO A1+/ARGYLE A1+
8b	11.4018.032.002	FORK SPRING AIR TOP CAP - 32MM SOLO AIR/DEBONAIR (INCLUDES 5 TOKENS, INTERNALLY THREADED AIR CAP) REBA/SID/REVELATION/RS-1/BLUTO/ARGYLE RCT
9	11.4015.027.000	FORK SPRING SOLO AIR ASSEMBLY - 80MM/100MM/120MM (USE WITH STEEL UPPER TUBES ONLY)- 2010 TORA XC/SL, 2011 RECON SILVER, ARGYLE
10	11.4015.450.000	FORK SPRING TRAVEL SPACERS - ALL TRAVEL SPACER KIT (NOT COMPATIBLE WITH SID/REBA/REVELATION SOLO AIR SPRING)
11	11.4018.032.003	FORK SPRING BOTTOMLESS TOKENS - SOLO AIR/DEBONAIR (QTY 5) - SID/REBA/REVELATION/RS-1/BLUTO/ARGYLE RCT SOLO AIR/35G
	SPARES	
12	00.4315.013.010	AXLE MAXLE LITE FRONT MTB 20X110 LENGTH 158MM THREAD LENGTH 9MM THREAD PITCH M20X2.0 - 32MM CHASSIS (2011-2016)
13	11.4308.327.002	AIR VALVE KIT - SCHRADER CORE (QTY 2) - FORKS/SHOCKS/REVERB
14	11.4310.697.000	FORK FOAM RING KIT - 32MM X 3.5MM (QTY 20) - SID/REBA/PIKE 2005-2006
15	11.4310.465.000	FORK SHAFT FASTENER KIT - (INCLUDES SHAFT BOLTS & CRUSH WASHERS)
bulk	11.4015.259.000	FORK CRUSH WASHERS - 8MM (QTY 50)
bulk	11.4015.260.000	FORK CRUSH WASHER RETAINER - 8MM (QTY 50)
ns	11.4015.468.010	FORK SPRING SOLO AIR ASSEMBLY - 80/100/140MM (USE WITH ALUMINUM UPPER TUBES ONLY) - ARGYLE RCT (2011- 2012)
	TOOLS/GREASE/FLUIDS	
ns	00.4318.031.000	FORK LOWER LEG DUST SEAL INSTALLATION TOOL 32MM (FOR FLANGELESS AND FLANGED DUST SEALS)
ns	00.4315.023.010	HIGH-PRESSURE FORK/SHOCK PUMP (300 PSI MAX) ROCKSHOX
ns	00.4315.023.040	HIGH-PRESSURE FORK/SHOCK PUMP (300 PSI MAX) ROCKSHOX DIGITALGAUGE
ns	00.4315.022.010	REAR SHOCK SCHRADER VALVE REMOVAL TOOL ROCKSHOX
ns	11.4315.021.020	ROCKSHOX SUSPENSION OIL, 5WT, 120ML BOTTLE - FORK DAMPER
ns	11.4015.354.010	ROCKSHOX SUSPENSION OIL, 5WT, 1 LITER BOTTLE - FORK DAMPER
ns	11.4315.021.040	ROCKSHOX SUSPENSION OIL, 15WT, 120ML BOTTLE - LOWER LEGS
ns	11.4015.354.030	ROCKSHOX SUSPENSION OIL, 15WT, 1 LITER BOTTLE - LOWER LEGS
ns	00.4318.008.000	GREASE SRAM BUTTER 20ML SYRINGE, FRICTION REDUCING GREASE BYSLICKOLEUM - DOUBLE TIME HUB PAWLS, FORKS & REVERB SERVICE
ns	00.4318.008.001	GREASE SRAM BUTTER 1OZ CONTAINER, FRICTION REDUCING GREASE BY SLICKOLEUM - DOUBLE TIME HUB PAWLS, FORKS & REVERB SERVICE

ZEB A1 (2021)

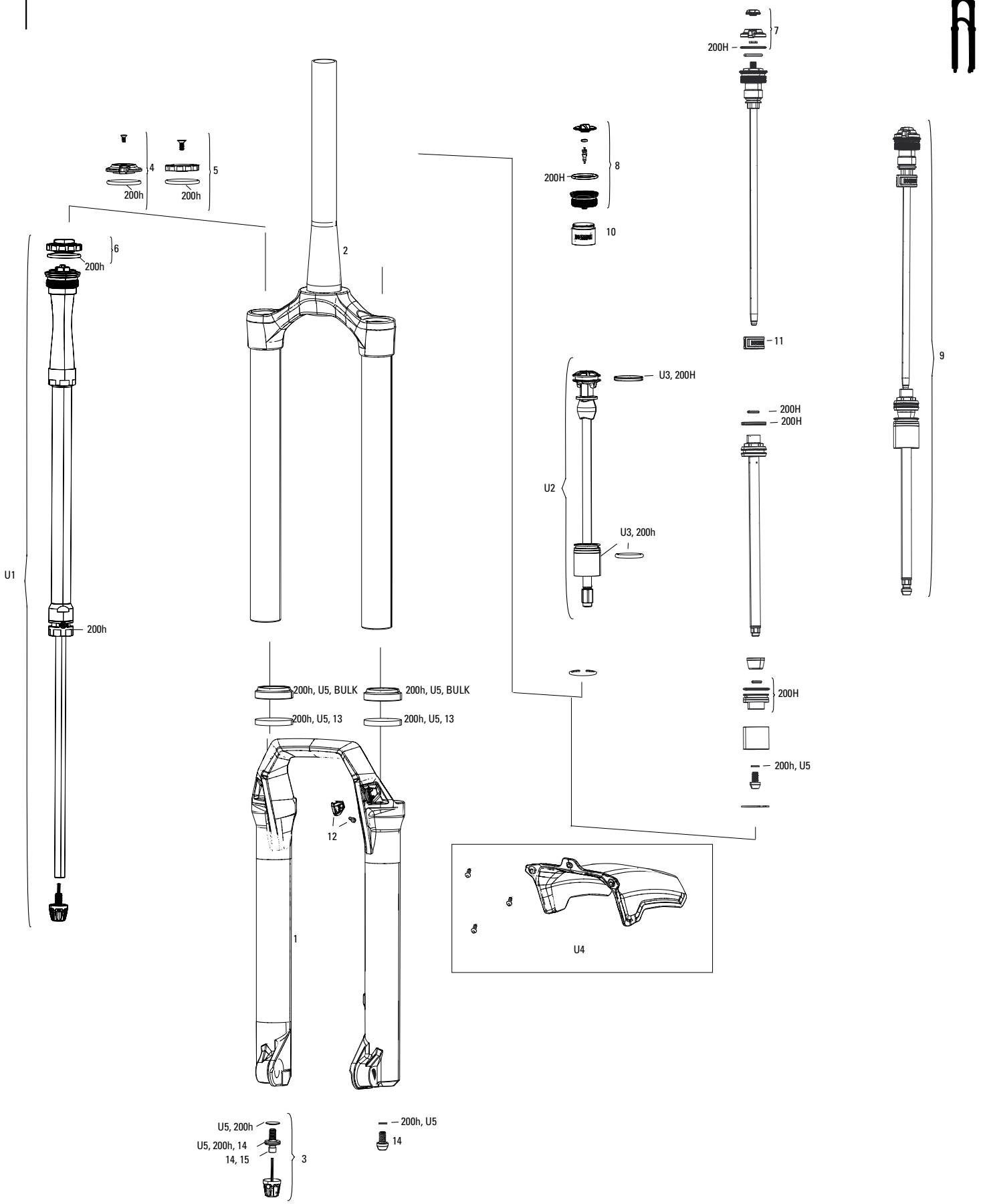
7
200H
4
200h
5
200h
8
200H
10
6
200h
2
11
9
U3, 200H
200H
200H
U2
U3, 200h
U1
200h
200h, U5, BULK
200h, U5, BULK
200h, U5, 13
200h, U5, 13
200H
200h, U5
12
U4
1
U5, 200h
U5, 200h, 14
14, 15
3
200h, U5
14

ZEB A1 (2021)

	UPGRADES	
U1	00.4318.048.000	Damper Upgrade Kit - CHARGER2.1 RC2 Crown High Speed, Low Speed Compression (Includes Complete Right Side Internals) - ZEB (A1+/2020+)
U2	00.4020.574.001	Air Spring Upgrade Kit - DebonAir C1 190mm (Includes Debon Air Assembly, seal head) - ZEB (A1+/2021+)
U2	00.4020.574.002	Air Spring Upgrade Kit - DebonAir C1 180mm (Includes Debon Air Assembly, seal head) - ZEB (A1+/2021+)
U2	00.4020.574.003	Air Spring Upgrade Kit - DebonAir C1 170mm (Includes Debon Air Assembly, seal head) - ZEB (A1+/2021+)
U2	00.4020.574.004	Air Spring Upgrade Kit - DebonAir C1 160mm (Includes Debon Air Assembly, seal head) - ZEB (A1+/2021+)
U2	00.4020.574.005	Air Spring Upgrade Kit - DebonAir C1 150mm (Includes Debon Air Assembly, seal head) - ZEB (A1+/2021+)
U3	00.4020.575.000	Seal Head Upgrade Kit - DebonAir C1 38mm Seal Head (Includes seal head) - ZEB (A+/2021+)
U4	00.4318.047.000	RockShox MTB Fender Black Short - ZEB (A1+/2021+)
U5	00.4318.045.005	Fork Dust Wiper Upgrade Kit - 38mm Black Flangeless Ultra-low Friction SKF Seals (Includes Dust Wipers & 6mm Foam Rings) - ZEB (A+/2021+)
U5	11.4018.121.000	FORK DUST WIPER KIT - 38mm BLACK (INCLUDES FLANGELESS DUST WIPERS) (QTY 20) - ZEB 2021
	SERVICE	
200H	00.4318.025.181	200 HOUR/1 YEAR SERVICE KIT (INCLUDES DUST SEALS, FOAM RINGS, O-RING SEALS, CHRC DAMPER SEALHEAD, DB AIR SPRING SEALHEAD) - ZEB R/SELECT A1 (2021)
200H	00.4318.025.182	200 HOUR/1 YEAR SERVICE KIT (INCLUDES DUST SEALS, FOAM RINGS, O-RING SEALS, CHGR2 DAMPER SEALHEAD, DB AIR SPRING SEALHEAD) - ZEB SELECT+/ULTIMATE A1 (2021)
200H	00.4318.025.183	200 HOUR/1 YEAR SERVICE KIT (INCLUDES DUST SEALS, FOAM RINGS, O-RING SEALS, CHRC DAMPER SEALHEAD, DUAL POSITION AIR SPRING SEALHEAD) - (DPA ONLY) ZEB R/SELECT A1 (2021)
200H	00.4318.025.184	200 HOUR/1 YEAR SERVICE KIT (INCLUDES DUST SEALS, FOAM RINGS, O-RING SEALS, CHGR2 DAMPER SEALHEAD, DUAL POSITION AIR SPRING SEALHEAD) - (DPA ONLY) ZEB SELECT+/ULTIMATE A1 (2021)
	LOWER LEG	
1	11.4018.091.035	FORK LOWER LEG - (FOIL DECALS INCLUDED) 27 15X110 BOOST™ (38MM) DIFFUSION BLACK - ZEB A1 R/SELECT/SELECT+ (2021)
1	11.4018.091.036	FORK LOWER LEG - (FOIL DECALS INCLUDED) 29 15X110 BOOST™ (38MM) DIFFUSION BLACK - ZEB A1 R/SELECT/SELECT+ (2021)
1	11.4018.091.037	FORK LOWER LEG - (FOIL DECALS INCLUDED) 27 15X110 BOOST™ (38MM) GLOSS BLACK - ZEB A1 ULTIMATE (2021)
1	11.4018.091.038	FORK LOWER LEG - (FOIL DECALS INCLUDED) 29 15X110 BOOST™ (38MM) GLOSS BLACK - ZEB A1 ULTIMATE (2021)
1	11.4018.091.039	FORK LOWER LEG - (FOIL DECALS INCLUDED) 27 15X110 BOOST™ (38MM) GREY - ZEB A1 ULTIMATE (2021)
1	11.4018.091.040	FORK LOWER LEG - (FOIL DECALS INCLUDED) 29 15X110 BOOST™ (38MM) GREY - ZEB A1 ULTIMATE (2021)
	CSU	
2	11.4018.090.032	FORK CSU - DEBONAIR - 27B 38 OFF-SET TAPER ANO BLACK (NO GRADIENTS) ZEB A1 (2021)
2	11.4018.090.033	FORK CSU - DEBONAIR - 27B 38 OFF-SET TAPER DIFF BLACK (NO GRADIENTS) ZEB A1 (2021)
2	11.4018.090.034	FORK CSU - DEBONAIR - 29B 51 OFF-SET TAPER ANO BLACK (NO GRADIENTS) ZEB A1 (2021)
2	11.4018.090.035	FORK CSU - DEBONAIR - 29B 51 OFF-SET TAPER DIFF BLACK (NO GRADIENTS) ZEB A1 (2021)
2	11.4018.090.036	FORK CSU - DEBONAIR - 27/29B 44 OFF-SET TAPER ANO BLACK (NO GRADIENTS) ZEB A1 (2021)
2	11.4018.090.037	FORK CSU - DEBONAIR - 27/29B 44 OFF-SET TAPER DIFF BLACK (NO GRADIENTS) ZEB A1 (2021)
2	11.4018.090.038	FORK CSU - DEBONAIR - 27/29B 44 OFF-SET 1.8 TAPER ANO BLACK (NO GRADIENTS) ZEB A1 (2021)
2	11.4018.090.039	FORK CSU - DEBONAIR - 27/29B 44 OFF-SET 1.8 TAPER DIFF BLACK (NO GRADIENTS) ZEB A1 (2021)
2	11.4018.090.040	FORK CSU - DUAL POSITION AIR- 27B 38 OFF-SET TAPER ANO BLACK (NO GRADIENTS) ZEB A1 (2021)
2	11.4018.090.041	FORK CSU - DUAL POSITION AIR- 27B 38 OFF-SET TAPER DIFF BLACK (NO GRADIENTS) ZEB A1 (2021)
2	11.4018.090.042	FORK CSU - DUAL POSITION AIR- 29B 51 OFF-SET TAPER ANO BLACK (NO GRADIENTS) ZEB A1 (2021)
2	11.4018.090.043	FORK CSU - DUAL POSITION AIR- 29B 51 OFF-SET TAPER DIFF BLACK (NO GRADIENTS) ZEB A1 (2021)
2	11.4018.090.044	FORK CSU - DUAL POSITION AIR- 27/29B 44 OFF-SET 1.8 TAPER ANO BLACK (NO GRADIENTS) ZEB A1 (2021)
2	11.4018.090.045	FORK CSU - DUAL POSITION AIR- 27/29B 44 OFF-SET 1.8 TAPER DIFF BLACK (NO GRADIENTS) ZEB A1 (2021)
2	11.4018.090.046	FORK CSU - DUAL POSITION AIR- 27/29B 44 OFF-SET TAPER ANO BLACK (NO GRADIENTS) ZEB A1 (2021)
2	11.4018.090.047	FORK CSU - DUAL POSITION AIR- 27/29B 44 OFF-SET TAPER DIFF BLACK (NO GRADIENTS) ZEB A1 (2021)
2	11.4018.090.048	FORK CSU - DEBONAIR - 27/29B 44 OFF-SET - 59OD-TAPER ANO BLACK (NO GRADIENTS) ZEB A1 (2021)
2	11.4018.090.049	FORK CSU - DEBONAIR - 27/29B 44 OFF-SET - 59OD-TAPER DIFF BLACK (NO GRADIENTS) ZEB A1 (2021)
2	11.4018.090.050	FORK CSU - DEBONAIR - 27/29B 44 OFF-SET - 69OD-TAPER ANO BLACK (NO GRADIENTS) ZEB A1 - TREK (2021)
2	11.4018.090.051	FORK CSU - DEBONAIR - 27/29B 44 OFF-SET - 69OD-TAPER DIFF BLACK (NO GRADIENTS) ZEB A1 - TREK (2021)
	DAMPER	
3	11.4018.082.004	FORK REBOUND DAMPER KNOB KIT - (INCLUDES ADJUSTER KNOB & BOLT) - CHARGER RC2/RCT2/RCT R - LYRIK, PIKE, BOXXER, ZEB
4	11.4018.082.025	FORK COMPRESSION DAMPER KNOB KIT- CROWN CHARGER RC (INCLUDES KNOB & SCREW) - ZEB SELECT A1 (2021)
5	11.4018.082.026	FORK COMPRESSION DAMPER KNOB KIT- CROWN CHARGER2 RC (INCLUDES KNOB & SCREW) - ZEB ULTIMATE A1 (2021)
6	11.4018.082.027	FORK COMPRESSION DAMPER KNOB KIT- CROWN CHARGER2 RC2 (INCLUDES KNOB & SCREW) - ZEB ULTIMATE A1 (2021)
	SPRING	
7	11.4018.120.000	FORK SPRING DUAL POSITION AIR KNOB - REVELATION A1+/PIKE A1+/LYRIK A1+/YARI A1+/ZEB A1+
8	11.4018.083.001	FORK SPRING AIR TOP CAP - 38MM DEBONAIR (INCLUDES SPLINED TOP CAP & VALVE COVER) - ZEB A1 (2021)
9	11.4018.103.010	FORK SPRING DUAL POSITION AIR ASSEMBLY - 160mm-27.5/29 (INCLUDES TOP CAP, KNOB, AIR PISTON, SHAFT BOLT) - ZEB A1 (2021)
9	11.4018.103.011	FORK SPRING DUAL POSITION AIR ASSEMBLY - 170mm-27.5/29 (INCLUDES TOP CAP, KNOB, AIR PISTON, SHAFT BOLT) - ZEB A1 (2021)
9	11.4018.103.012	FORK SPRING DUAL POSITION AIR ASSEMBLY - 180mm-27.5/29 (INCLUDES TOP CAP, KNOB, AIR PISTON, SHAFT BOLT) - ZEB A1 (2021)
10	11.4018.032.000	FORK SPRING BOTTOMLESS TOKENS - 35mm/38mm SOLO AIR/DEBONAIR (QTY 3) - PIKE/BOXXER B1/LYRIK B1/YARI/SID 35MM/ZEB
10	11.4018.032.001	FORK SPRING BOTTOMLESS TOKENS - 35mm/38mm SOLO AIR/DEBONAIR (QTY 10) PIKE/BOXXER B1/LYRIK B1/YARI/SID 35MM/ZEB
11	11.4018.032.004	FORK SPRING BOTTOMLESS TOKENS - 35mm/38mm DUAL POSITION AIR (QTY 3) - PIKE A1-A2/LYRIK B1+/YARI A1+/ZEB
11	11.4018.032.005	FORK SPRING BOTTOMLESS TOKENS - 35mm/38mm DUAL POSITION AIR (QTY 10) - PIKE A1-A2/LYRIK B1+/YARI A1+/ZEB
	MAXLE	
ns	00.4318.005.019	Axle Maxle Stealth Front, 15x110, Length 158mm, Thread Length 9mm, Thread Pitch M15x1.50 - Boost Compatible
ns	00.4318.005.007	Axle Maxle Ultimate Front, 15x110, Length 156.5mm, Thread Length 9mm, Thread Pitch M15x1.50 - PIKE, Lyrik B1, Yari Boost Compatible
	SPARES	
12	11.4018.115.001	FORK HOSE CLAMP - ZEB A1 (2021) GLOSS BLACK
13	11.4018.116.001	FORK FOAM RING KIT - 38MM X 6MM (QTY 20) - ZEB A1 (2021)
14	11.4015.403.090	FORK SHAFT FASTENER KIT - (INCLUDES SHAFT BOLTS & CRUSH WASHERS) - LYRIK RCT3 A1+, RC B1+,RC2 C1+ (2016+)/PIKE 29+ (2017/BOXXER C1+ (2019+), ZEB A1 (2021)
15	11.4015.259.000	FORK CRUSH WASHERS - 8MM (QTY 50)
ns	11.4308.327.002	AIR VALVE KIT - SCHRADER CORE (QTY 2) - FORKS/SHOCKS/REVERB
ns	11.4018.059.000	FORK CALIPER SPACER KIT - 3S (ALLOWS FOR 203mm BRAKE ROTOR) – BOXXER B1+/ZEB A1+
	TOOLS/GREASE/FLUIDS	
ns	00.4318.044.000	Fork Lower Leg Dust Seal Installation Tool 38mm (for flangeless and flanged dust seals)
ns	00.4315.023.010	HIGH-PRESSURE FORK/SHOCK PUMP (300 PSI MAX) ROCKSHOX
ns	00.4315.023.040	HIGH-PRESSURE FORK/SHOCK PUMP (300 PSI MAX) ROCKSHOX DIGITALGAUGE
ns	00.4315.022.010	REAR SHOCK SCHRADER VALVE REMOVAL TOOL ROCKSHOX
ns	11.4315.021.080	ROCKSHOX SUSPENSION OIL, 0W-30, 120ML BOTTLE - PIKE/REVELATION 2018+/LYRIK B1/YARI/SID 2020+ LOWER LEGS
ns	11.4015.354.050	ROCKSHOX SUSPENSION OIL, 0-W30, 1 LITER BOTTLE - PIKE/REVELATION 2018+/LYRIK B1/YARI/SID 2020+ LOWER LEGS
ns	11.4115.094.030	MAXIMA SUSPENSION OIL PLUSH, 3WT 1 LITER BOTTLE - REAR SHOCK/CHARGER DAMPER
ns	00.4318.007.000	RockShox Charger Damper Standard Bleed Kit (includes Syringe, Charger1 fitting, Standard fitting, Suspension Oil 3w) - Charger/RaceDay dampers
ns	00.4318.008.002	GREASE ROCKSHOX DYNAMIC SEAL GREASE (PTFE) 1OZ - RECOMMENDED FOR SERVICING REAR SHOCKS & FORKS
ns	00.4318.008.004	GREASE ROCKSHOX DYNAMIC SEAL GREASE 500ML - RECOMMENDED FOR SERVICING REAR SHOCKS & FORKS

BOXXER SELECT/ULTIMATE C2 (2020-2021)

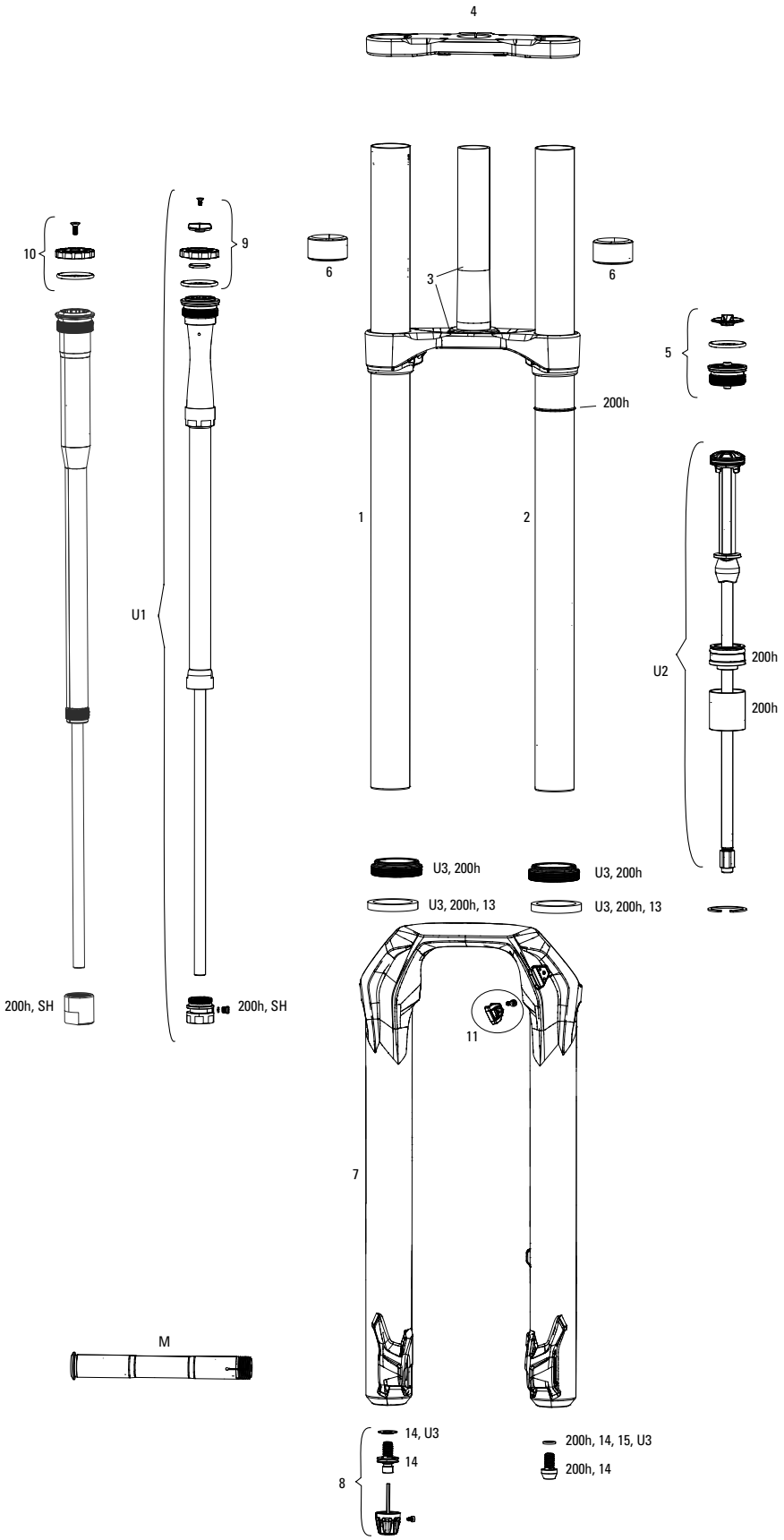

BOXXER SELECT/ULTIMATE C2 (2020-2021)

	UPGRADES	
U1	00.4020.171.000	DAMPER UPGRADE KIT - CHARGER2.1 RC2 CROWN HIGH SPEED, LOW SPEED COMPRESSION (INCLUDES COMPLETE RIGHT SIDE INTERNALS) - BOXXER 27.5"/29" C1+ (2019+)
U2	00.4019.933.000	AIR SPRING KIT - DEBONAIR 200MM (INCLUDES DEBONAIR ASSEMBLY, SEALHEAD) - BOXXER C1+ (2019+)
U2	00.4019.933.001	AIR SPRING KIT - DEBONAIR 190MM (INCLUDES DEBONAIR ASSEMBLY, SEALHEAD) - BOXXER C1+ (2019+)
U2	00.4019.933.002	AIR SPRING KIT - DEBONAIR 180MM (INCLUDES DEBONAIR ASSEMBLY, SEALHEAD) - BOXXER C1+ (2019+)
U3	00.4318.045.004	FORK DUST WIPER UPGRADE KIT - 35MM BLACK FLANGELESS ULTRA-LOW FRICTION SKF SEALS (INCLUDES DUST WIPERS, 4MM & 6MM FOAM RINGS-PIKE/LYRIKB1/YARI/REVELATION/BOXXER/DOMAIN/35/SID35MM
	SERVICE	
200	00.4318.025.130	200 HOUR/1 YEAR SERVICE KIT (INCLUDES DUST SEALS, FOAM RINGS, O-RING SEALS, CHGR2.1 DAMPER SEALHEAD, DB AIR SPRING SEALHEAD) - BOXXER ULT C2 (2020)
200	00.4318.025.140	200 HOUR/1 YEAR SERVICE KIT (INCLUDES DUST SEALS, FOAM RINGS, O-RING SEALS, CHARGER RC DAMPER SEALHEAD, DB AIR SPRING SEALHEAD) - BOXXER SELECT C2 (2020)
	UPPERS	
1	11.4018.093.000	FORK CSU UPPER TUBE - TAPER WALL, RIGHT, BLACK - BOXXER C1 (2019+)
2	11.4018.093.001	FORK CSU UPPER TUBE - TAPER WALL, LEFT, BLACK - BOXXER C1 (2019+)
3	11.4018.094.000	FORK CSU LOWER CROWN/STEERER ASSEMBLY GREY 35MM - 10OS (27.5, 46 OFFSET)(29, 56 OFFSET) - BOXXER C1+ (2019+)
3	11.4018.094.001	FORK CSU LOWER CROWN/STEERER ASSEMBLY GREY 35MM - 0OS (27.5,36 OFFSET)(29, 46 OFFSET) - BOXXER C1+ (2019+)
4	11.4018.099.000	FORK CSU UPPER CROWN - 35MM, SHORT GREY- 10OS (27.5, 46 OFFSET)(29, 56 OFFSET) -BOXXER C1+ (2019+)
4	11.4018.099.001	FORK CSU UPPER CROWN - 35MM, TALL GREY - 10OS (27.5, 46 OFFSET)(29, 56 OFFSET) -BOXXER C1+ (2019+)
4	11.4018.099.002	FORK CSU UPPER CROWN - 35MM, SHORT GREY- 0 OS (27.5, 36 OFFSET)(29, 46 OFFSET) -BOXXER C1+ (2019+)
4	11.4018.099.003	FORK CSU UPPER CROWN - 35MM, TALL GREY - 0 OS (27.5, 36 OFFSET)(29, 46 OFFSET) -BOXXER C1+ (2019+)
5	11.4018.083.000	FORK SPRING AIR TOP CAP - 35MM (.5MM THREAD PITCH) BOOST™ 15X110 (INCLUDES SPLINED TOP CAP & VALVE COVER) - LYRIK A1+/YARI A1+/PIKE B1+/REVELATION A1+(35MM)/BOXXER 35MM/SID35MM
6	11.4015.361.000	FORK BUMPER STOP KIT - UPPER TUBE/FRAME (QTY 2) - DOMAIN DUAL CROWN/BOXXER 35MM
	LOWERS	
7	11.4018.091.006	FORK LOWER LEG - (FOIL DECALS INCLUDED) 27 20X110 BOOST™ RED -BOXXER C1+ (2019+)
7	11.4018.091.007	FORK LOWER LEG - (FOIL DECALS INCLUDED) 29 20X110 BOOST™ RED -BOXXER C1+ (2019+)
7	11.4018.091.008	FORK LOWER LEG - (FOIL DECALS INCLUDED) 27 20X110 BOOST™ GLOSS BLACK -BOXXER C1-C2 (2019+)
7	11.4018.091.009	FORK LOWER LEG - (FOIL DECALS INCLUDED) 29 20X110 BOOST™ GLOSS BLACK -BOXXER C1-C2 (2019+)
7	11.4018.095.001	FORK LOWER LEG - (DECALS NOT INCLUDED) 27 20X110 BOOST™ DIFFUSION BLACK - BOXXER C1+ (2019+)
7	11.4018.095.003	FORK LOWER LEG - (DECALS NOT INCLUDED) 29 20X110 BOOST™ DIFFUSION BLACK - BOXXER C1+ (2019+)
M	00.4318.027.000	AXLE MAXLE DH FRONT MTB 20X110, LENGTH 158MM, THREAD LENGTH 10MM, THREAD PITCH M20X1.50 - BOXXER C1 (2019+)
	DAMPER	
8	11.4018.082.004	FORK REBOUND DAMPER KNOB KIT - (INCLUDES ADJUSTER KNOB & BOLT) - CHARGER RC2/RCT2/RCT R - LYRIK, PIKE, BOXXER, ZEB
9	11.4018.082.005	FORK COMPRESSION DAMPER KNOB KIT - CHARGER 2/2.1 RC2 CROWN - LYRIK RC2 C1/ULTIMATE RC2 C2 (2019+)/PIKE RC2 ULTIMATE B3 (2020+)
10	11.4018.082.006	FORK COMPRESSION DAMPER KNOB KIT - CHRC CROWN- LYRIK RC SELECT+ C2 (2020+)/PIKE RC SELECT+ B3 (2020+)/BOXXER RC C1/RC SELECT C2 (2019+)
SH	11.4018.107.000	FORK DAMPER SEALHEAD ASSEMBLY - CHARGER 2.1 - LYRIK RCT3 B1+/RC C1+, PIKE RCT3 B1+/RC2 C1+, BOXXER RC2 C1+, LYRIK/PIKE/BOXXER SELECT/SELECT+/ULTIMATE (RC2/RCT3) C2+
SH	11.4018.107.001	FORK DAMPER SEALHEAD ASSEMBLY - CHARGER 2.1 - LYRIK RCT3 B1+/RC C1+, PIKE RCT3 B1+/RC2 C1+, BOXXER RC2 C1+, LYRIK/PIKE/BOXXER SELECT/SELECT+/ULTIMATE (RC2/RCT3) C2 - BULK, QTY10
	SPARES	
11	11.4018.115.002	FORK HOSE CLAMP - BOXXER C1+ (2019+) GREY
13	11.4018.028.005	FORK FOAM RING KIT - 35MM X 6MM (QTY 20) - PIKE/LYRIK B1/YARI/BOXXER/DOMAIN DUAL CROWN
14	11.4015.403.090	FORK SHAFT FASTENER KIT - (INCLUDES SHAFT BOLTS & CRUSH WASHERS) - LYRIK RCT3 A1+, RC B1+,RC2 C1+ (2016+)/PIKE 29+ (2017/BOXXER C1+ (2019+), ZEB A1 (2021)
15	11.4015.259.000	FORK CRUSH WASHERS - 8MM (QTY 50)
ns	11.4308.327.002	AIR VALVE KIT - SCHRADER CORE (QTY 2) - FORKS/SHOCKS/REVERB
ns	11.4018.059.000	FORK CALIPER SPACER KIT - 3S (ALLOWS FOR 203mm BRAKE ROTOR) – BOXXER B1+/ZEB A1+
	TOOLS/GREASE/FLUIDS	
ns	00.4318.032.000	FORK LOWER LEG DUST SEAL INSTALLATION TOOL 35MM (FOR FLANGELESS AND FLANGED DUST SEALS)
ns	00.4315.023.010	HIGH-PRESSURE FORK/SHOCK PUMP (300 PSI MAX) ROCKSHOX
ns	00.4315.023.040	HIGH-PRESSURE FORK/SHOCK PUMP (300 PSI MAX) ROCKSHOX DIGITALGAUGE
ns	00.4315.022.010	REAR SHOCK SCHRADER VALVE REMOVAL TOOL ROCKSHOX
ns	11.4315.021.080	ROCKSHOX SUSPENSION OIL, 0W-30, 120ML BOTTLE - PIKE/REVELATION 2018+/LYRIK B1/YARI/SID 2020+ LOWER LEGS
ns	11.4015.354.050	ROCKSHOX SUSPENSION OIL, 0-W30, 1 LITER BOTTLE - PIKE/REVELATION 2018+/LYRIK B1/YARI/SID 2020+ LOWER LEGS
ns	11.4115.094.030	MAXIMA SUSPENSION OIL PLUSH, 3WT 1 LITER BOTTLE - REAR SHOCK/CHARGER DAMPER
ns	11.4115.094.040	MAXIMA SUSPENSION OIL PLUSH, 7WT 1 LITER BOTTLE - REAR SHOCK
ns	00.4318.007.000	RockShox Charger Damper Standard Bleed Kit (includes Syringe, Charger1 fitting, Standard fitting, Suspension Oil 3w) - Charger/RaceDay dampers
ns	00.4318.008.002	GREASE ROCKSHOX DYNAMIC SEAL GREASE (PTFE) 1OZ - RECOMMENDED FOR SERVICING REAR SHOCKS & FORKS
ns	00.4318.008.004	GREASE ROCKSHOX DYNAMIC SEAL GREASE 500ML - RECOMMENDED FOR SERVICING REAR SHOCKS & FORKS

BOXXER C1 (2019)

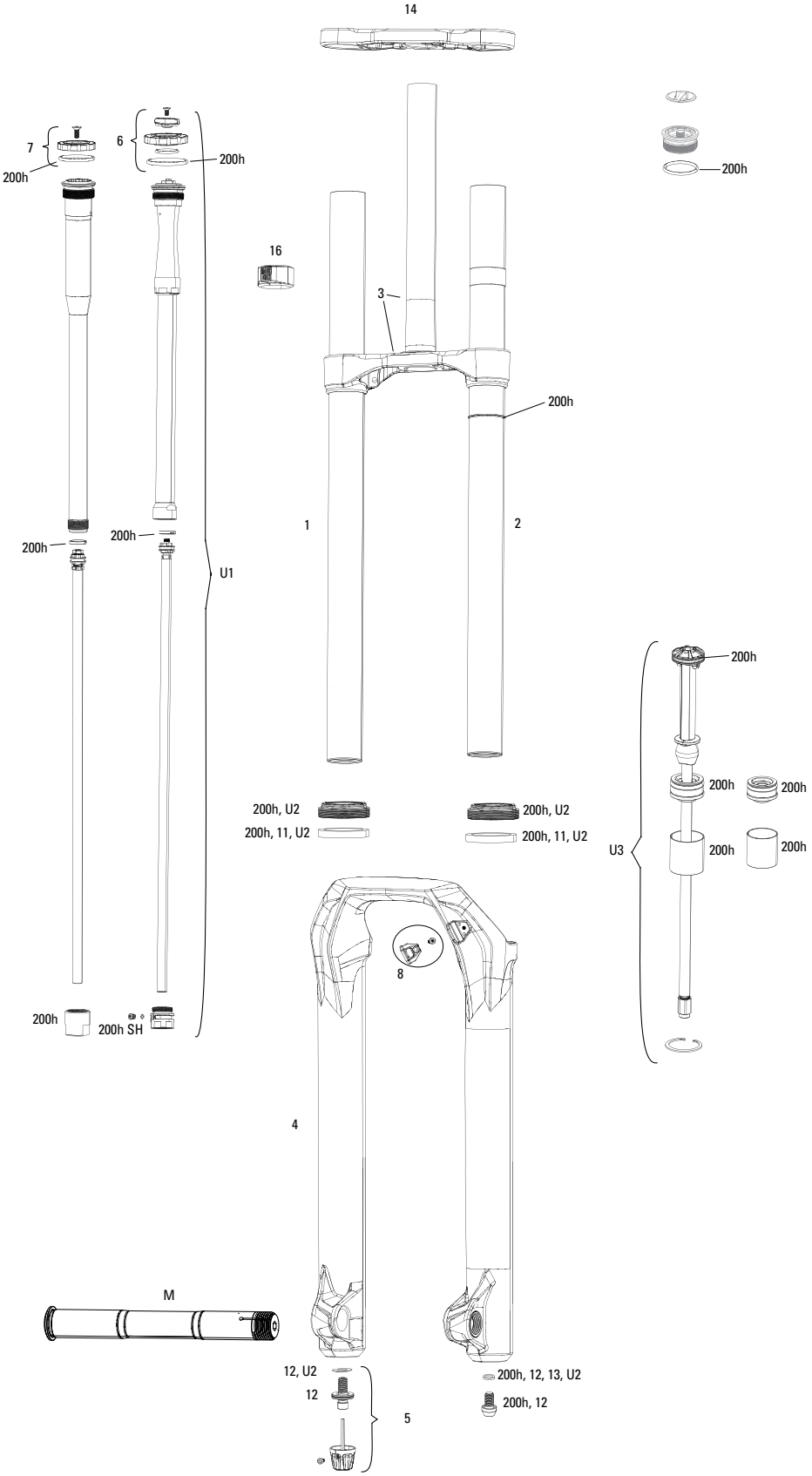

Note:

1. To change offset purchase upper and lower crown together (matching offset)
2. BoXXer C1 forks have a 200mm post mount brake.

BOXXER C1 (2019)

	UPGRADES	
U1	00.4020.171.000	DAMPER UPGRADE KIT - CHARGER2.1 RC2 CROWN HIGH SPEED, LOW SPEED COMPRESSION (INCLUDES COMPLETE RIGHT SIDE INTERNALS) - BOXXER 27.5"/29" C1+ (2019+)
U2	00.4318.045.004	FORK DUST WIPER UPGRADE KIT - 35MM BLACK FLANGELESS ULTRA-LOW FRICTION SKF SEALS (INCLUDES DUST WIPERS, 4MM & 6MM FOAM RINGS-PIKE/LYRIKB1/YARI/REVELATION/BOXXER/DOMAIN/35/SID35MM
U3	00.4019.933.000	AIR SPRING KIT - DEBONAIR 200MM (INCLUDES DEBONAIR ASSEMBLY, SEALHEAD) - BOXXER C1+ (2019+)
U3	00.4019.933.001	AIR SPRING KIT - DEBONAIR 190MM (INCLUDES DEBONAIR ASSEMBLY, SEALHEAD) - BOXXER C1+ (2019+)
U3	00.4019.933.002	AIR SPRING KIT - DEBONAIR 180MM (INCLUDES DEBONAIR ASSEMBLY, SEALHEAD) - BOXXER C1+ (2019+)
	SERVICE	
200h	00.4318.025.030	200 HOUR/1 YEAR SERVICE KIT (INCLUDES DUST SEALS, FOAM RINGS, O-RING SEALS, DAMPER SEALHEAD, AIR SPRING SEALHEAD) - BOXXER RC2 C1 (2019)
200h	00.4318.025.040	200 HOUR/1 YEAR SERVICE KIT (INCLUDES DUST SEALS, FOAM RINGS, O-RING SEALS, DAMPER SEALHEAD, AIR SPRING SEALHEAD) - BOXXER RC C1 (2019)
	UPPERS	
1	11.4018.093.000	FORK CSU UPPER TUBE - TAPER WALL, RIGHT, BLACK - BOXXER C1 (2019+)
2	11.4018.093.001	FORK CSU UPPER TUBE - TAPER WALL, LEFT, BLACK - BOXXER C1 (2019+)
3	11.4018.094.000	FORK CSU LOWER CROWN/STEERER ASSEMBLY GREY 35MM - 10OS (27.5, 46 OFFSET)(29, 56 OFFSET) - BOXXER C1+ (2019+)
3	11.4018.094.001	FORK CSU LOWER CROWN/STEERER ASSEMBLY GREY 35MM - 0OS (27.5,36 OFFSET)(29, 46 OFFSET) - BOXXER C1+ (2019+)
14	11.4018.099.000	FORK CSU UPPER CROWN - 35MM, SHORT GREY- 10OS (27.5, 46 OFFSET)(29, 56 OFFSET) -BOXXER C1+ (2019+)
14	11.4018.099.001	FORK CSU UPPER CROWN - 35MM, TALL GREY - 10OS (27.5, 46 OFFSET)(29, 56 OFFSET) -BOXXER C1+ (2019+)
14	11.4018.099.002	FORK CSU UPPER CROWN - 35MM, SHORT GREY- 0 OS (27.5, 36 OFFSET)(29, 46 OFFSET) -BOXXER C1+ (2019+)
14	11.4018.099.003	FORK CSU UPPER CROWN - 35MM, TALL GREY - 0 OS (27.5, 36 OFFSET)(29, 46 OFFSET) -BOXXER C1+ (2019+)
15	11.4018.083.000	FORK SPRING AIR TOP CAP - 35MM (.5MM THREAD PITCH) BOOST™ 15X110 (INCLUDES SPLINED TOP CAP & VALVE COVER) - LYRIK A1+/YARI A1+/PIKE B1+/REVELATION A1+(35MM)/BOXXER 35MM/SID35MM
16	11.4015.361.000	FORK BUMPER STOP KIT - UPPER TUBE/FRAME (QTY 2) - DOMAIN DUAL CROWN/BOXXER 35MM
	LOWERS	
4	11.4018.091.000	FORK LOWER LEG - (WC DECALS INCLUDED) 27 20X110 BOOST™ RED - BOXXER C1 2019+
4	11.4018.091.001	FORK LOWER LEG - (WC DECALS INCLUDED) 29 20X110 BOOST™ RED - BOXXER C1 2019+
4	11.4018.091.008	FORK LOWER LEG - (FOIL DECALS INCLUDED) 27 20X110 BOOST™ GLOSS BLACK -BOXXER C1-C2 (2019+)
4	11.4018.095.001	FORK LOWER LEG - (DECALS NOT INCLUDED) 27 20X110 BOOST™ DIFFUSION BLACK - BOXXER C1+ (2019+)
4	11.4018.091.009	FORK LOWER LEG - (FOIL DECALS INCLUDED) 29 20X110 BOOST™ GLOSS BLACK -BOXXER C1-C2 (2019+)
4	11.4018.095.003	FORK LOWER LEG - (DECALS NOT INCLUDED) 29 20X110 BOOST™ DIFFUSION BLACK - BOXXER C1+ (2019+)
M	00.4318.027.000	AXLE MAXLE DH FRONT MTB 20X110, LENGTH 158MM, THREAD LENGTH 10MM, THREAD PITCH M20X1.50 - BOXXER C1 (2019+)
	DAMPER	
5	11.4018.082.004	FORK REBOUND DAMPER KNOB KIT - (INCLUDES ADJUSTER KNOB & BOLT) - CHARGER RC2/RCT2/RCT R - LYRIK, PIKE, BOXXER, ZEB
6	11.4018.082.005	FORK COMPRESSION DAMPER KNOB KIT - CHARGER 2/2.1 RC2 CROWN - LYRIK RC2 C1/ULTIMATE RC2 C2 (2019+)/PIKE RC2 ULTIMATE B3 (2020+)
7	11.4018.082.006	FORK COMPRESSION DAMPER KNOB KIT - CHRC CROWN- LYRIK RC SELECT+ C2 (2020+)/PIKE RC SELECT+ B3 (2020+)/BOXXER RC C1/RC SELECT C2 (2019+)
SH	11.4018.107.000	FORK DAMPER SEALHEAD ASSEMBLY - CHARGER 2.1 - LYRIK RCT3 B1+/RC C1+, PIKE RCT3 B1+/RC2 C1+, BOXXER RC2 C1+, LYRIK/PIKE/BOXXER SELECT/SELECT+/ULTIMATE (RC2/RCT3) C2+
SH	11.4018.107.001	FORK DAMPER SEALHEAD ASSEMBLY - CHARGER 2.1 - LYRIK RCT3 B1+/RC C1+, PIKE RCT3 B1+/RC2 C1+, BOXXER RC2 C1+, LYRIK/PIKE/BOXXER SELECT/SELECT+/ULTIMATE (RC2/RCT3) C2 - BULK, QTY10
	SPARES	
8	11.4018.115.002	FORK HOSE CLAMP - BOXXER C1+ (2019+) GREY
11	11.4018.028.005	FORK FOAM RING KIT - 35mm X 6mm (QTY 20) - PIKE/LYRIK B1/YARI/BOXXER/DOMAIN DUAL CROWN
12	11.4015.403.090	FORK SHAFT FASTENER KIT - (INCLUDES SHAFT BOLTS & CRUSH WASHERS) - LYRIK RCT3 A1+, RC B1+,RC2 C1+ (2016+)/PIKE 29+ (2017/BOXXER C1+ (2019+), ZEB A1 (2021)
13	11.4015.259.000	FORK CRUSH WASHERS - 8MM (QTY 50)
ns	11.4308.327.002	AIR VALVE KIT - SCHRADER CORE (QTY 2) - FORKS/SHOCKS/REVERB
ns	11.4018.100.000	FORK DECAL KIT - 35MM DUAL CROWN SILVER DECALS/GLOSS BLACK FORK - BOXXER C1+ (2019+)
ns	11.4018.100.001	FORK DECAL KIT - 35MM DUAL CROWN SILVER DECALS/DIFFUSION BLACK FORK - BOXXER C1+ (2019+)
ns	11.4018.100.002	FORK DECAL KIT - 35MM DUAL CROWN SILVER DECALS/BOXXER RED FORK BOXXER C1+ (2019+)
ns	11.4018.059.000	FORK CALIPER SPACER KIT - 3S (ALLOWS FOR 203mm BRAKE ROTOR) – BOXXER B1+/ZEB A1+
	TOOLS/GREASE/FLUIDS	
ns	00.4315.023.010	HIGH-PRESSURE FORK/SHOCK PUMP (300 PSI MAX) ROCKSHOX
ns	00.4315.023.040	HIGH-PRESSURE FORK/SHOCK PUMP (300 PSI MAX) ROCKSHOX DIGITALGAUGE
ns	00.4315.022.010	REAR SHOCK SCHRADER VALVE REMOVAL TOOL ROCKSHOX
ns	11.4315.021.080	ROCKSHOX SUSPENSION OIL, 0W-30, 120ML BOTTLE - PIKE/REVELATION 2018+/LYRIK B1/YARI/SID 2020+ LOWER LEGS
ns	11.4015.354.050	ROCKSHOX SUSPENSION OIL, 0-W30, 1 LITER BOTTLE - PIKE/REVELATION 2018+/LYRIK B1/YARI/SID 2020+ LOWER LEGS
ns	11.4115.094.030	MAXIMA SUSPENSION OIL PLUSH, 3WT 1 LITER BOTTLE - REAR SHOCK/CHARGER DAMPER
ns	00.4318.007.000	RockShox Charger Damper Standard Bleed Kit (includes Syringe, Charger1 fitting, Standard fitting, Suspension Oil 3w) - Charger/RaceDay dampers
ns	00.4318.008.000	GREASE SRAM BUTTER 20ML SYRINGE, FRICTION REDUCING GREASE BYSLICKOLEUM - DOUBLE TIME HUB PAWLS, FORKS & REVERB SERVICE
ns	00.4318.008.001	GREASE SRAM BUTTER 1OZ CONTAINER, FRICTION REDUCING GREASE BY SLICKOLEUM - DOUBLE TIME HUB PAWLS, FORKS & REVERB SERVICE

BOXXER 35mm B1-B2 (2015-2018)

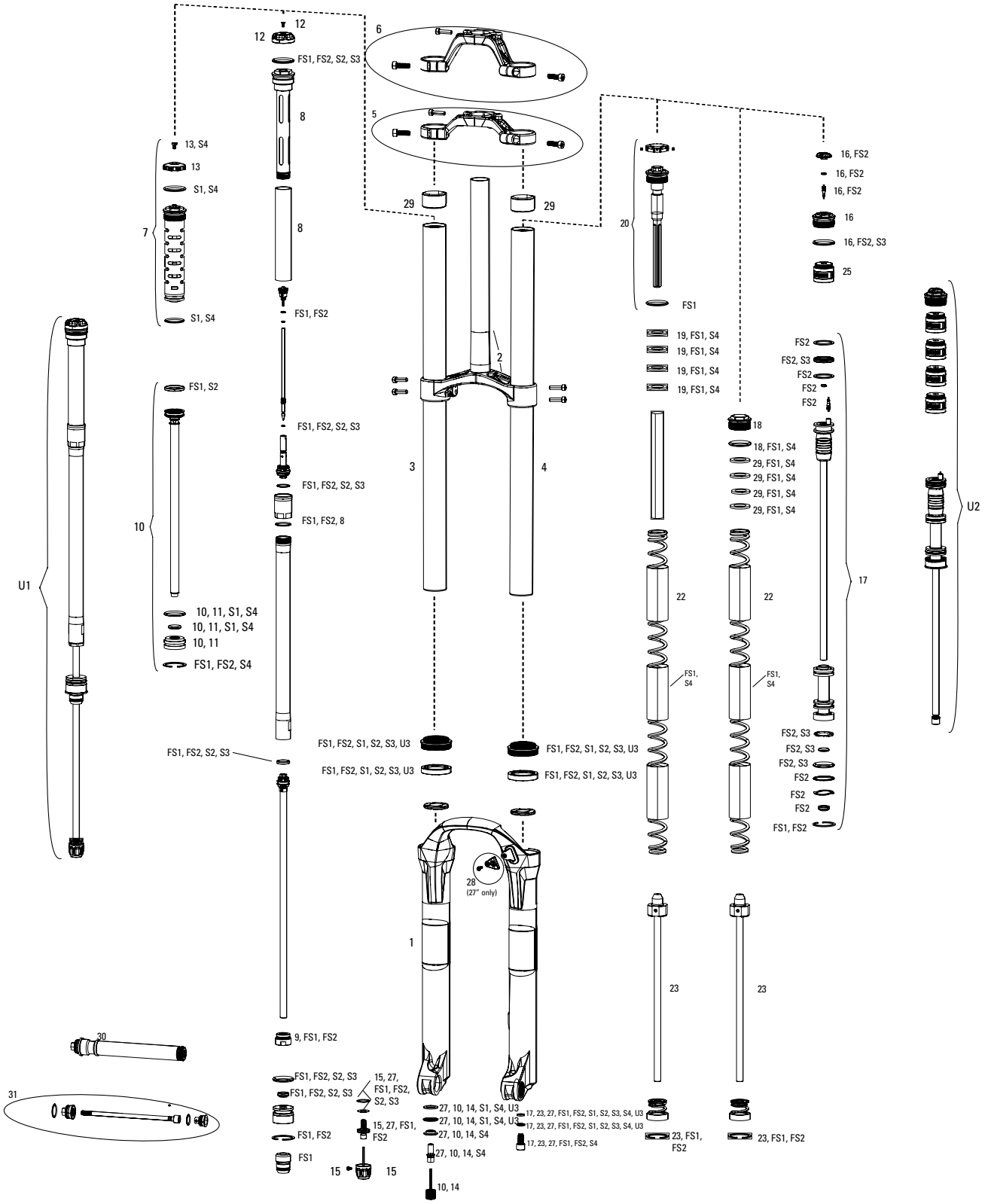

Note:

1. Full service kits include replaceable o-rings, glide rings, retaining rings, crush washers, crush washer retainers and shaft bolts/nuts. All air service kits include replacement schrader valve cores.
2. BoXXer 26" forks have a 160 post mount brake and 27.5" forks have a 200mm post mount brake.
3. For Bottomless Token options, please see the respective page listed in the index.
4. A complete decal and maxle overview can be found in back of the catalog.

BOXXER 35mm B1-B2 (2015-2018)

	UPGRADE	
U1	00.4018.783.000	DAMPER UPGRADE KIT - CHARGER - (INCLUDES COMPLETE RIGHT SIDE INTERNALS) - BOXXER (A1-B1/2010-2019)
U2	00.4018.783.001	AIR SPRING UPGRADE KIT - SOLO AIR - INCLUDES REFINED SOLO AIR ASSEMBLY, 4 BOTTOMLESS TOKENS - BOXXER (2011-2016, SERIAL NUMBER LATER THAN 16T11XXXXXXX)
U3	00.4318.045.004	FORK DUST WIPER UPGRADE KIT - 35MM BLACK FLANGELESS ULTRA-LOW FRICTION SKF SEALS (INCLUDES DUST WIPERS, 4MM & 6MM FOAM RINGS-PIKE/LYRIKB1/YARI/ REVELATION/BOXXER/DOMAIN/35/SID35MM
	SERVICE	
FS1	11.4018.055.020	FORK SERVICE KIT - FULL SERVICE SOLO AIR (INCLUDES AIR SEALS, DAMPER SEALS & HARDWARE) (INCLUDES UPGRADED SEALHEAD) - BOXXER TEAM B1
FS2	11.4018.055.030	FORK SERVICE KIT - FULL SERVICE SOLO AIR (INCLUDES AIR SEALS, DAMPER SEALS & HARDWARE) (INCLUDES UPGRADED SEALHEAD) - BOXXER WORLD CUP B1
S1	00.4315.032.150	AM FORK SERVICE KIT, BASIC (INCLUDES DUST SEALS, FOAM RINGS,O-RING SEALS) - BOXXER RC (2012-2016)
S2	00.4315.032.510	AM FORK SERVICE KIT, BASIC (INCLUDES DUST SEALS, FOAM RINGS,O-RING SEALS) - BOXXER TEAM CHARGER DAMPER
S3	00.4315.032.520	AM FORK SERVICE KIT, BASIC (INCLUDES DUST SEALS, FOAM RINGS,O-RING SEALS) - BOXXER WC CHARGER DAMPER
S4	11.4015.386.000	FORK SERVICE KIT - BOXXER RACE/RC (2010-2016)
	LOWER LEG	
1	11.4018.006.217	FORK LOWER LEG - (DECALS NOT INCLUDED) 26 20X110 BLACK - BOXXER 2010-2016
1	11.4018.006.219	FORK LOWER LEG - (DECALS NOT INCLUDED) 26 20X110 DIFFUSION BLACK- BOXXER 2010-2016
1	11.4018.006.220	FORK LOWER LEG - (DECALS NOT INCLUDED) 27 20X110 BLACK - BOXXER (B1/2015-2017)
1	11.4018.006.222	FORK LOWER LEG - (DECALS NOT INCLUDED) 27 20X110 DIFFUSION BLACK - BOXXER (B1/2015-2017), DOMAIN DUAL CROWN (2015-2017)
	UPPER TUBES	
2	11.4015.362.070	FORK CSU LOWER CROWN/STEERER ASSEMBLY - BLACK 35MM - DOMAIN DUAL CROWN/BOXXER
3	11.4015.363.040	FORK CSU UPPER TUBE - TAPER WALL, RIGHT, BLACK BOXXER (2013-2015)
3	11.4015.363.060	FORK CSU UPPER TUBE - TAPER WALL, RIGHT, NB BLACK - BOXXER (2013-2018)
4	11.4015.363.050	FORK CSU UPPER TUBE - STRAIGHT WALL, LEFT , BLACK - BOXXER (2013-2015)
5	11.4015.364.100	FORK UPPER CROWN- 35MM, SHORT BLACK CLEAR - BOXXER/DOMAIN DUAL CROWN B1-B2 (2015-2018)
6	11.4015.364.130	FORK UPPER CROWN - 35MM, TALL BLACK CLEAR - BOXXER/DOMAIN DUAL CROWN B1-B2 (2015-2018)
	DAMPER	
7	11.4015.368.000	FORK COMPRESSION DAMPER - MOCO IS (INCLUDES COMPRESSION ADJUSTER KNOB) - BOXXER RACE/RC 2010-2016
8	11.4018.031.010	FORK DAMPER CHARGER BLADDER ASSEMBLY - BOXXER 35MM B1 (2015-2018)
9	11.4015.353.060	FORK DAMPER SEALHEAD ASSEMBLY - CHARGER 35MM - BOXXER B1
10	11.4015.371.000	FORK REBOUND DAMPER - (INCLUDES SHAFT BOLT, SEALHEAD & ADJUSTER KNOB) - BOXXER RACE/RC 2010-2016
11	11.4015.372.000	FORK DAMPER SEALHEAD ASSEMBLY - BOXXER RACE/RC 2010-2015
12	11.4015.547.120	FORK COMPRESSION DAMPER KNOB KIT - CROWN CHARGER DAMPER DH (INCLUDES KNOB & SCREW) - BOXXER 35MM B1-B2 (2015-2018)
13	11.4015.367.000	FORK COMPRESSION DAMPER KNOB KIT - CROWN MOCO IS COMPRESSION DAMPER (2010-2016 BOXXER, DOMAIN, LYRIK, TOTEM)
14	11.4015.404.025	FORK REBOUND DAMPER KNOB KIT - (INCLUDES ADJUSTER KNOB & BOLT) - BOXXER RC B1
15	11.4015.404.026	FORK REBOUND DAMPER KNOB KIT - (INCLUDES ADJUSTER KNOB & BOLT) - BOXXER CHARGER DAMPER B1
	SPRING	
16	11.4018.012.004	FORK SPRING AIR TOP CAP - 35MM (1.0MM THREAD PITCH) - PIKE A1-A2 (2014-2017)/BOXXER B1 (2015-2018)
17	11.4015.475.030	FORK SPRING SOLO AIR ASSEMBLY - BOXXER 2011-2016 (SERIAL NUMBER LATER THAN 16T11XXXXXXX)
18	11.4015.375.000	FORK SPRING COIL TOP CAP - BOXXER RACE A1-B1 (2010- 2018)
19	11.4015.376.000	FORK SPRING COIL SPACERS - PRELOAD (QTY 4) - DOMAIN DUAL CROWN A1-A3 (2007- 2017)/BOXXER RACE/RC, TEAM/R2C2 (2010- 2018)
20	11.4015.377.000	FORK SPRING COIL - TOP-CAP/DROP-STOP ASSEMBLY (ADJUSTER KNOB) - BOXXER TEAM/R2C2 (2010- 2018)
22	11.4015.380.000	FORK SPRING COIL - X-SOFT (SILVER) - DOMAIN DUAL CROWN A1-A3 (2007- 2017)/BOXXER RACE/RC, TEAM/R2C2 (2010- 2018)
22	11.4015.380.010	FORK SPRING COIL - SOFT (YELLOW) - DOMAIN DUAL CROWN A1-A3 (2007- 2017)/BOXXER RACE/RC, TEAM/R2C2 (2010- 2018)
22	11.4015.380.020	FORK SPRING COIL - MEDIUM (RED) - DOMAIN DUAL CROWN A1-A3 (2007- 2017)/BOXXER RACE/RC, TEAM/R2C2 (2010- 2018)
22	11.4015.380.030	FORK SPRING COIL - FIRM (BLUE) - DOMAIN DUAL CROWN A1-A3 (2007- 2017)/BOXXER RACE/RC, TEAM/R2C2 (2010- 2018)
22	11.4015.380.040	FORK SPRING COIL - X-FIRM (BLACK) - DOMAIN DUAL CROWN A1-A3 (2007- 2017)/BOXXER RACE/RC, TEAM/R2C2 (2010- 2018)
23	11.4015.381.000	FORK SPRING COIL SHAFT - (INCLUDES SHAFT BOLT) - DOMAIN DUAL CROWN A1-A3 (2007- 2017)/BOXXER RACE/RC, TEAM/R2C2 (2010- 2018)
25	11.4018.032.000	FORK SPRING BOTTOMLESS TOKENS - 35MM/38MM SOLO AIR/DEBONAIR (QTY 3) - PIKE/BOXXER B1/LYRIK B1/YARI/SID 35MM/ZEB
25	11.4018.032.001	FORK SPRING BOTTOMLESS TOKENS - 35MM/38MM SOLO AIR/DEBONAIR (QTY 10) PIKE/BOXXER B1/LYRIK B1/YARI/SID 35MM/ZEB
	SPARES	
27	11.4015.403.070	FORK SHAFT FASTENER KIT - (INCLUDES SHAFT BOLTS & CRUSH WASHERS) - BOXXER RC/TEAM/WC B1
ns	11.4308.327.002	AIR VALVE KIT - SCHRADER CORE (QTY 2) - FORKS/SHOCKS/REVERB
28	11.4015.534.010	FORK HOSE CLAMP - PIKE/LYRIK/YARI/SID/REVELATION/BOXXER/XC30/30G/30S/RECON/SEKTOR/BLUTO/REBA/35G/35S
29	11.4015.361.000	FORK BUMPER STOP KIT - UPPER TUBE/FRAME (QTY 2) - DOMAIN DUAL CROWN/BOXXER 35MM
30	00.4315.013.040	AXLE MAXLE DH FRONT MTB 20X110 LENGTH 165MM THREAD LENGTH 9MM THREAD PITCH M20X2.0 - 35MM CHASSIS
31	11.4015.366.010	AXLE MAXLE - DH WEDGE/LEVER/AXLE KIT - BOXXER 2010-2016
ns	11.4318.003.386	FORK DECAL KIT - BOXXER 26/27.5 BLACK/WHITE LOWER LEG B1
ns	11.4318.003.387	FORK DECAL KIT - BOXXER 26/27.5 WHITE/BLACK LOWER LEG B1
ns	11.4018.059.000	FORK CALIPER SPACER KIT - 3S (ALLOWS FOR 203mm BRAKE ROTOR) – BOXXER B1+/ZEB A1+
	TOOLS/GREASE/FLUIDS	
ns	00.4318.032.000	FORK LOWER LEG DUST SEAL INSTALLATION TOOL 35MM (FOR FLANGELESS AND FLANGED DUST SEALS)
ns	00.4315.022.010	REAR SHOCK SCHRADER VALVE REMOVAL TOOL ROCKSHOX
ns	00.4315.023.020	AIR PUMP (HIGH PRESSURE/HIGH VOLUME CONVERTIBLE) ROCKSHOX BOXXER
ns	00.4315.023.030	HIGH-PRESSURE FORK/SHOCK PUMP (600 PSI MAX) ROCKSHOX
ns	11.4318.010.000	FORK BLEED KIT - CHARGER 1 DAMPER FITTING (FOR BLEEDING CHARGER 1 DAMPERS) - BOXXER 35MM B1-B2 (2015-2018)/PIKE A1-A2 (2014-2017)/LYRIK RCT3 A1, RC B1 (2016-2017)
ns	00.4318.007.000	RockShox Charger Damper Standard Bleed Kit (includes Syringe, Charger1 fitting, Standard fitting, Suspension Oil 3w) - Charger/RaceDay dampers
ns	11.4315.021.020	ROCKSHOX SUSPENSION OIL, 5WT, 120ML BOTTLE - FORK DAMPER
ns	11.4015.354.010	ROCKSHOX SUSPENSION OIL, 5WT, 1 LITER BOTTLE - FORK DAMPER
ns	11.4315.021.040	ROCKSHOX SUSPENSION OIL, 15WT, 120ML BOTTLE - LOWER LEGS
ns	11.4015.354.030	ROCKSHOX SUSPENSION OIL, 15WT, 1 LITER BOTTLE - LOWER LEGS
ns	00.4318.008.000	GREASE SRAM BUTTER 20ML SYRINGE, FRICTION REDUCING GREASE BYSLICKOLEUM - DOUBLE TIME HUB PAWLS, FORKS & REVERB SERVICE
ns	00.4318.008.001	GREASE SRAM BUTTER 1OZ CONTAINER, FRICTION REDUCING GREASE BY SLICKOLEUM - DOUBLE TIME HUB PAWLS, FORKS & REVERB SERVICE

BOXXER 35mm A1-A2 (2010-2014)

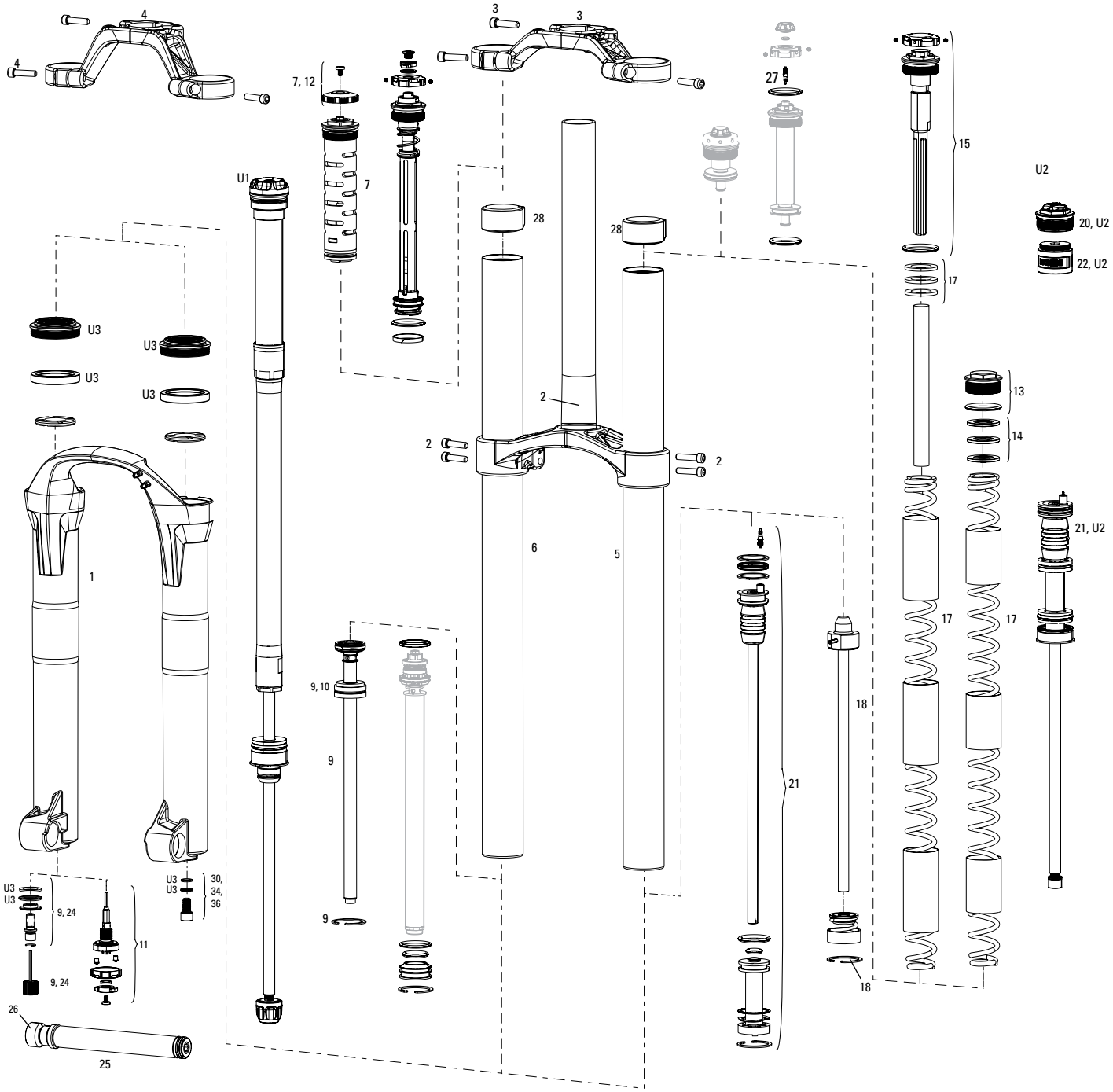

Note:

1. Full service kits include replaceable o-rings, glide rings, retaining rings, crush washers, crush washer retainers and shaft bolts/nuts. All air service kits include replacement schrader valve cores. Not all service parts are pictured.
2. 2011-2012 R2C2/World Cup compression and rebound dampers must be used together and cannot be used with either 2010 compression or 2010 rebound damper.
3. World Cup Solo Air Retro kit (2010 to 2011+ air internals) is compatible only with 2010 Boxxer upper tube. 2011+ BoXXer straight-wall upper is only compatible with 2011+ BoXXer Solo Air spring assembly and top cap; must replace Solo Air spring assembly and top cap when using 2011+ BoXXer straight-wall upper tube.
4. When Using Newer Lower Leg on Montion Conrol Fork, remove casting plug.
5. A complete decal and maxle overview can be found in back of the catalog.

BOXXER 35mm A1-A2 (2010-2014)

	UPGRADE	
U1	00.4018.783.000	DAMPER UPGRADE KIT - CHARGER - (INCLUDES COMPLETE RIGHT SIDE INTERNALS) - BOXXER (A1-B1/2010-2019)
U2	00.4018.783.001	AIR SPRING UPGRADE KIT - SOLO AIR - INCLUDES REFINED SOLO AIR ASSEMBLY, 4 BOTTOMLESS TOKENS - BOXXER (2011-2016, SERIAL NUMBER LATER THAN 16T11XXXXXXX)
U3	00.4318.045.004	FORK DUST WIPER UPGRADE KIT - 35MM BLACK FLANGELESS ULTRA-LOW FRICTION SKF SEALS (INCLUDES DUST WIPERS, 4MM & 6MM FOAM RINGS-PIKE/LYRIKB1/YARI/ REVELATION/BOXXER/DOMAIN/35/SID35MM
	SERVICE	
ns	11.4015.387.000	FORK SERVICE KIT - BOXXER TEAM (2010-2014)
ns	11.4015.388.000	FORK SERVICE KIT - BOXXER WORLD CUP (2010)
ns	11.4015.476.020	FORK SERVICE KIT - BOXXER R2C2/WC (2011-2014)
ns	00.4315.032.150	AM FORK SERVICE KIT, BASIC (INCLUDES DUST SEALS, FOAM RINGS,O-RING SEALS) - BOXXER RC (2012-2016)
ns	00.4315.032.160	AM FORK SERVICE KIT, BASIC (INCLUDES DUST SEALS, FOAM RINGS,O-RING SEALS) - BOXXER R2C2 (2012-2014)
ns	00.4315.032.170	AM FORK SERVICE KIT, BASIC (INCLUDES DUST SEALS, FOAM RINGS,O-RING SEALS) - BOXXER WORLD CUP (2012-2014)
ns	11.4015.386.000	FORK SERVICE KIT - BOXXER RACE/RC (2010-2016)
	LOWER LEG	
1	11.4018.006.217	FORK LOWER LEG - (DECALS NOT INCLUDED) 26 20X110 BLACK - BOXXER 2010-2016
1	11.4018.006.219	FORK LOWER LEG - (DECALS NOT INCLUDED) 26 20X110 DIFFUSION BLACK- BOXXER 2010-2016
1	11.4018.006.220	FORK LOWER LEG - (DECALS NOT INCLUDED) 27 20X110 BLACK - BOXXER (B1/2015-2017)
1	11.4018.006.222	FORK LOWER LEG - (DECALS NOT INCLUDED) 27 20X110 DIFFUSION BLACK - BOXXER (B1/2015-2017), DOMAIN DUAL CROWN (2015-2017)
	UPPER TUBE	
2	11.4015.362.010	FORK CSU LOWER CROWN/STEERER ASSEMBLY - BLACK - 2010-2014 BOXXER 35MM
3	11.4015.364.100	FORK UPPER CROWN- 35MM, SHORT BLACK CLEAR - BOXXER/DOMAIN DUAL CROWN B1-B2 (2015-2018)
4	11.4015.364.130	FORK UPPER CROWN - 35MM, TALL BLACK CLEAR - BOXXER/DOMAIN DUAL CROWN B1-B2 (2015-2018)
5	11.4015.363.020	FORK CSU UPPER TUBE - STRAIGHT-WALL, LEFT (COMPATIBLE ONLY WITH BOXXER SOLO AIR SPRING & TOP CAP) - BOXXER 2011-2014
6	11.4015.363.040	FORK CSU UPPER TUBE - TAPER WALL, RIGHT, BLACK BOXXER (2013-2015)
	DAMPER	
7	11.4015.368.000	FORK COMPRESSION DAMPER - MOCO IS (INCLUDES COMPRESSION ADJUSTER KNOB) - BOXXER RACE/RC 2010-2016
9	11.4015.371.000	FORK REBOUND DAMPER - (INCLUDES SHAFT BOLT, SEALHEAD & ADJUSTER KNOB) - BOXXER RACE/RC 2010-2016
10	11.4015.372.000	FORK DAMPER SEALHEAD ASSEMBLY - BOXXER RACE/RC 2010-2015
11	11.4015.472.010	FORK REBOUND DAMPER KNOB KIT - (INCLUDES ADJUSTER KNOB & BOLT) - BOXXER TEAM/R2C2/WC 2010-2014
12	11.4015.367.000	FORK COMPRESSION DAMPER KNOB KIT - CROWN MOCO IS COMPRESSION DAMPER (2010-2016 BOXXER, DOMAIN, LYRIK, TOTEM)
	SPRING	
13	11.4015.375.000	FORK SPRING COIL TOP CAP - BOXXER RACE A1-B1 (2010- 2018)
14	11.4015.376.000	FORK SPRING COIL SPACERS - PRELOAD (QTY 4) - DOMAIN DUAL CROWN A1-A3 (2007- 2017)/BOXXER RACE/RC, TEAM/R2C2 (2010- 2018)
15	11.4015.377.000	FORK SPRING COIL - TOP-CAP/DROP-STOP ASSEMBLY (ADJUSTER KNOB) - BOXXER TEAM/R2C2 (2010- 2018)
17	11.4015.380.000	FORK SPRING COIL - X-SOFT (SILVER) - DOMAIN DUAL CROWN A1-A3 (2007- 2017)/BOXXER RACE/RC, TEAM/R2C2 (2010- 2018)
17	11.4015.380.010	FORK SPRING COIL - SOFT (YELLOW) - DOMAIN DUAL CROWN A1-A3 (2007- 2017)/BOXXER RACE/RC, TEAM/R2C2 (2010- 2018)
17	11.4015.380.020	FORK SPRING COIL - MEDIUM (RED) - DOMAIN DUAL CROWN A1-A3 (2007- 2017)/BOXXER RACE/RC, TEAM/R2C2 (2010- 2018)
17	11.4015.380.030	FORK SPRING COIL - FIRM (BLUE) - DOMAIN DUAL CROWN A1-A3 (2007- 2017)/BOXXER RACE/RC, TEAM/R2C2 (2010- 2018)
17	11.4015.380.040	FORK SPRING COIL - X-FIRM (BLACK) - DOMAIN DUAL CROWN A1-A3 (2007- 2017)/BOXXER RACE/RC, TEAM/R2C2 (2010- 2018)
18	11.4015.381.000	FORK SPRING COIL SHAFT - (INCLUDES SHAFT BOLT) - DOMAIN DUAL CROWN A1-A3 (2007- 2017)/BOXXER RACE/RC, TEAM/R2C2 (2010- 2018)
20	11.4018.012.004	FORK SPRING AIR TOP CAP - 35MM (1.0MM THREAD PITCH) - PIKE A1-A2 (2014-2017)/BOXXER B1 (2015-2018)
21	11.4015.475.030	FORK SPRING SOLO AIR ASSEMBLY - BOXXER 2011-2016 (SERIAL NUMBER LATER THAN 16T11XXXXXXX)
22	11.4018.032.000	FORK SPRING BOTTOMLESS TOKENS - 35MM/38MM SOLO AIR/DEBONAIR (QTY 3) - PIKE/BOXXER B1/LYRIK B1/YARI/SID 35MM/ZEB
22	11.4018.032.001	FORK SPRING BOTTOMLESS TOKENS - 35MM/38MM SOLO AIR/DEBONAIR (QTY 10) PIKE/BOXXER B1/LYRIK B1/YARI/SID 35MM/ZEB
	SPARES	
24	11.4015.074.000	FORK REBOUND DAMPER KNOB KIT - (INCLUDES ADJUSTER KNOB & BOLT) - DOMAIN/LYRIK/TOTEM/10-14 BOXXER RC
25	00.4315.013.040	AXLE MAXLE DH FRONT MTB 20X110 LENGTH 165MM THREAD LENGTH 9MM THREAD PITCH M20X2.0 - 35MM CHASSIS
26	11.4015.366.010	AXLE MAXLE - DH WEDGE/LEVER/AXLE KIT - BOXXER 2010-2016
27	11.4308.327.002	AIR VALVE KIT - SCHRADER CORE (QTY 2) - FORKS/SHOCKS/REVERB
28	11.4015.361.000	FORK BUMPER STOP KIT - UPPER TUBE/FRAME (QTY 2) - DOMAIN DUAL CROWN/BOXXER 35MM
ns	11.4015.359.000	FORK BUSHING KIT - 35MM UPPER 35X38MM, LOWER 35X53MM - DOMAIN DUAL CROWN2011-2015 /BOXXER A1-A2 (2010-2014)
	TOOLS/GREASE/FLUIDS	
ns	00.4318.032.000	FORK LOWER LEG DUST SEAL INSTALLATION TOOL 35MM (FOR FLANGELESS AND FLANGED DUST SEALS)
ns	00.4315.022.010	REAR SHOCK SCHRADER VALVE REMOVAL TOOL ROCKSHOX
ns	00.4315.023.020	AIR PUMP (HIGH PRESSURE/HIGH VOLUME CONVERTIBLE) ROCKSHOX BOXXER
ns	00.4315.023.030	HIGH-PRESSURE FORK/SHOCK PUMP (600 PSI MAX) ROCKSHOX
ns	11.4315.021.020	ROCKSHOX SUSPENSION OIL, 5WT, 120ML BOTTLE - FORK DAMPER
ns	11.4015.354.010	ROCKSHOX SUSPENSION OIL, 5WT, 1 LITER BOTTLE - FORK DAMPER
ns	11.4315.021.040	ROCKSHOX SUSPENSION OIL, 15WT, 120ML BOTTLE - LOWER LEGS
ns	11.4015.354.030	ROCKSHOX SUSPENSION OIL, 15WT, 1 LITER BOTTLE - LOWER LEGS
ns	00.4318.008.000	GREASE SRAM BUTTER 20ML SYRINGE, FRICTION REDUCING GREASE BYSLICKOLEUM - DOUBLE TIME HUB PAWLS, FORKS & REVERB SERVICE
ns	00.4318.008.001	GREASE SRAM BUTTER 1OZ CONTAINER, FRICTION REDUCING GREASE BY SLICKOLEUM - DOUBLE TIME HUB PAWLS, FORKS & REVERB SERVICE

MONARCH XX B1-C2 (2014-2019)

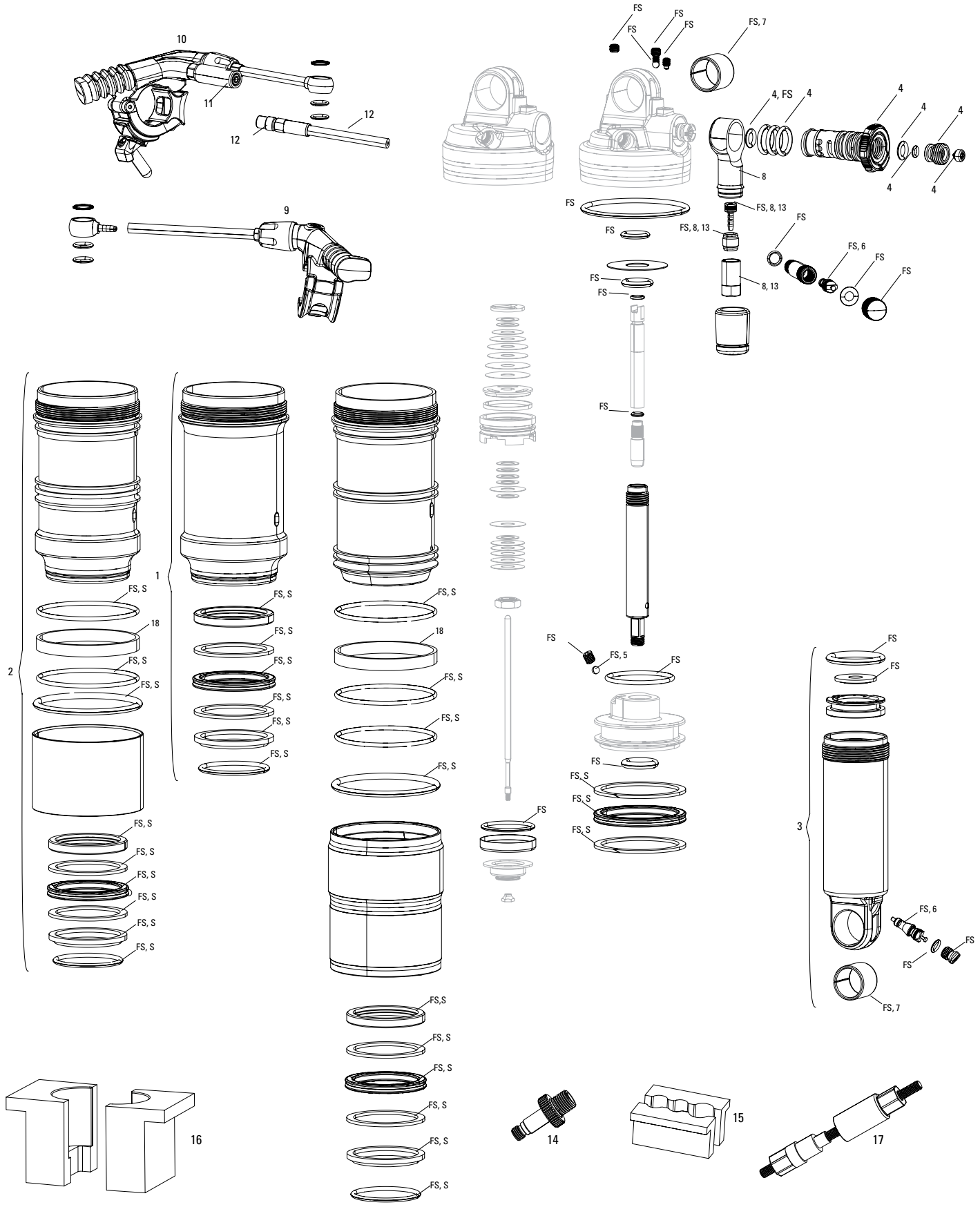

MONARCH XX B1-C2 (2014-2019)

	UPGRADES	
ns	00.4018.783.004	AIR CAN UPGRADE KIT - DEBONAIR 165X38 (INCLUDES AIR CAN, VOLUME SPACERS, SEALS & DECALS) - B1 & LATER (MONARCH 2014+/RT32013+)
ns	00.4018.783.005	AIR CAN UPGRADE KIT - DEBONAIR 184X44 (INCLUDES AIR CAN, VOLUME SPACERS, SEALS & DECALS) - B1 & LATER (MONARCH 2014+/RT32013+)
ns	00.4018.783.006	AIR CAN UPGRADE KIT - DEBONAIR 190/200X51 (INCLUDES AIR CAN,VOLUME SPACERS, SEALS & DECALS) - B1 & LATER (MONARCH 2014+/RT3 2013+)
ns	00.4018.783.007	AIR CAN UPGRADE KIT - DEBONAIR 200X57 (INCLUDES AIR CAN, VOLUME SPACERS, SEALS & DECALS) - B1 & LATER (MONARCH 2014+/RT32013+)
ns	00.4018.783.008	AIR CAN UPGRADE KIT - DEBONAIR 216X63 (INCLUDES AIR CAN, VOLUME SPACERS, SEALS & DECALS) - B1 & LATER (MONARCH 2014+/RT32013+)
	SERVICE	
FS	11.4118.038.001	REAR SHOCK SERVICE KIT - FULL SERVICE MONARCH XX B1 (2014-2019)
S	00.4315.032.380	AM REAR SHOCK AIR CAN SERVICE KIT, BASIC - (INCLUDES SEAL GREASE/OIL) - MONARCH B1 (PLUS,XX,RL) C1 (R,RT3) D1 (2014+)
S	00.4315.032.390	AM REAR SHOCK AIR CAN SERVICE KIT, BASIC - (INCLUDES SEAL GREASE/OIL) - MONARCH HIGH VOLUME B1 (PLUS,XX,RL) C1 (R,RT3) (2014+)
S	00.4315.032.540	AM REAR SHOCK AIR CAN SERVICE KIT, BASIC - (INCLUDES SEAL GREASE/OIL) - MONARCH DEBONAIR (2014+)
	AIR CAN	
ns	11.4418.001.001	REAR SHOCK SPARE PARTS AIR CAN WITH AUTOSAG BLACK MONARCH 197X48 2014
1	11.4118.033.008	REAR SHOCK AIR CAN ASSEMBLY - 152X31 (INCLUDES SEALS, 15W50 & DYNAMIC SEAL GREASE) - MONARCH B1 (PLUS, RL, XX), C1(R,RT,RT3) D1(RT3)
1	11.4118.033.009	REAR SHOCK AIR CAN ASSEMBLY - 165X38 (INCLUDES SEALS, 15W50 & DYNAMIC SEAL GREASE) - MONARCH B1 (PLUS, RL, XX), C1(R,RT,RT3) D1(RT3)
1	11.4118.033.010	REAR SHOCK AIR CAN ASSEMBLY - 184X44 (INCLUDES SEALS, 15W50 & DYNAMIC SEAL GREASE) - MONARCH B1 (PLUS, RL, XX), C1(R,RT,RT3) D1(RT3)
1	11.4118.033.011	REAR SHOCK AIR CAN ASSEMBLY - 190X51/200X51 (INCLUDES SEALS, 15W50 & DYNAMIC SEAL GREASE) - MONARCH B1 (PLUS, RL, XX), C1(R,RT,RT3) D1(RT3)
1	11.4118.033.012	REAR SHOCK AIR CAN ASSEMBLY - 200X57 (INCLUDES SEALS, 15W50 & DYNAMIC SEAL GREASE) - MONARCH B1 (PLUS, RL, XX), C1(R,RT,RT3) D1(RT3)
1	11.4118.033.013	REAR SHOCK AIR CAN ASSEMBLY - 216X63 (INCLUDES SEALS, 15W50 & DYNAMIC SEAL GREASE) - MONARCH B1 (PLUS, RL, XX), C1(R,RT,RT3) D1(RT3)
2	11.4118.033.014	REAR SHOCK AIR CAN ASSEMBLY - HIGH VOLUME 165X38 (INCLUDES SEALS, 15W50 & DYNAMIC SEAL GREASE) - MONARCH B1(PLUS, RL, XX), C1(R,RT,RT3)
2	11.4118.033.015	REAR SHOCK AIR CAN ASSEMBLY - HIGH VOLUME 190X51/200X51 (INCLUDES SEALS, 15W50 & DYNAMIC SEAL GREASE) - MONARCH B1(PLUS, RL, XX), C1(R,RT,RT3)
2	11.4118.033.016	REAR SHOCK AIR CAN ASSEMBLY - HIGH VOLUME 200X57 (INCLUDES SEALS, 15W50 & DYNAMIC SEAL GREASE) - MONARCH B1(PLUS, RL, XX), C1(R,RT,RT3)
2	11.4118.033.017	REAR SHOCK AIR CAN ASSEMBLY - HIGH VOLUME 216X63 (INCLUDES SEALS, 15W50 & DYNAMIC SEAL GREASE) - MONARCH B1(PLUS, RL, XX), C1(R,RT,RT3)
2	11.4118.033.028	REAR SHOCK AIR CAN ASSEMBLY - DEBONAIR 165X38 (INCLUDES DECALS, SEALS, 15W50 & DYNAMIC SEAL GREASE) - MONARCH B1(PLUS, RL, XX), C1(R,RT,RT3) D1(RT3)
2	11.4118.033.029	REAR SHOCK AIR CAN ASSEMBLY - DEBONAIR 184X44 (INCLUDES DECALS, SEALS, 15W50 & DYNAMIC SEAL GREASE) - MONARCH B1(PLUS, RL, XX), C1(R,RT,RT3) D1(RT3)
2	11.4118.033.030	REAR SHOCK AIR CAN ASSEMBLY - DEBONAIR 190X51/200X51 (INCLUDES DECALS, SEALS, 15W50 & DYNAMIC SEAL GREASE) - MONARCH B1(PLUS, RL, XX), C1(R,RT,RT3) D1(RT3)
2	11.4118.033.031	REAR SHOCK AIR CAN ASSEMBLY - DEBONAIR 200X57 (INCLUDES DECALS, SEALS, 15W50 & DYNAMIC SEAL GREASE) - MONARCH B1(PLUS, RL, XX), C1(R,RT,RT3) D1(RT3)
2	11.4118.033.032	REAR SHOCK AIR CAN ASSEMBLY - DEBONAIR 216X63 (INCLUDES DECALS, SEALS, 15W50 & DYNAMIC SEAL GREASE) - MONARCH B1(PLUS, RL, XX), C1(R,RT,RT3) D1(RT3)
	DAMPER BODY	
3	11.4118.037.014	REAR SHOCK DAMPER BODY/IFP - FAST BLACK, 165X38 -MONARCH 2014+
3	11.4118.037.015	REAR SHOCK DAMPER BODY/IFP - FAST BLACK, 184X44 -MONARCH 2014+
3	11.4118.037.016	REAR SHOCK DAMPER BODY/IFP - FAST BLACK, 190X51 -MONARCH 2014+
3	11.4118.037.017	REAR SHOCK DAMPER BODY/IFP - FAST BLACK, 200X51 -MONARCH 2014+
3	11.4118.037.018	REAR SHOCK DAMPER BODY/IFP - FAST BLACK, 200X57 -MONARCH 2014+
3	11.4118.037.020	REAR SHOCK DAMPER BODY/IFP - FAST BLACK, 216X63 -MONARCH 2014+
	SPARES	
4	11.4118.001.001	REAR SHOCK REBOUND KNOB KIT - (INCLUDES LEVER, SEALS, SPRING, DETENT BALL & SCREWS) - MONARCH XX A1-B1
5	11.4115.132.010	REAR SHOCK NYLON BALL - BLEED PISTON SEALHEAD- MONARCH/MONARCH PLUS, QTY 20
6	11.4308.327.002	AIR VALVE KIT - SCHRADER CORE (QTY 2) - FORKS/SHOCKS/REVERB
ns	11.4115.124.010	REAR SHOCK AIR VALVE KIT - (INCLUDES VALVE BODY, VALVE, VALVE CAP) - MONARCH/MONARCH PLUS
7	11.4115.013.000	REAR SHOCK EYELET BUSHING KIT -1/2"X1/2" (QTY 2)
8	11.4118.002.000	REAR SHOCK HOSE FITTING KIT - (INCLUDES BANJO, COMPRESSION FITTING & THREADED BARB) - MONARCH XX
9	11.4318.000.000	REMOTE - XLOC SPRINT LEFT BLACK (INCLUDES HOSE, BARB & COMPRESSION NUT) - MONARCH XX
9	11.4318.000.010	REMOTE - XLOC SPRINT RIGHT BLACK (INCLUDES HOSE, BARB & COMPRESSION NUT) - MONARCH XX
ns	11.4318.001.000	REMOTE SERVICE KIT - XLOC SPRINT - MONARCH XX
10	11.4315.013.070	REMOTE - XLOC FULL SPRINT LEFT GOLD ADJUSTER (INCLUDES HOSE/BANJO) - SID/REVELATION/MONARCH XX
10	11.4315.013.080	REMOTE - XLOC FULL SPRINT RIGHT GOLD ADJUSTER (INCLUDES HOSE/BANJO) - SID/REVELATION/MONARCH XX
ns	11.4318.006.010	REMOTE SERVICE KIT - XLOC FULL SPRINT (INCLUDES RATCHET WHEEL & O-RINGS) - MONARCH XX/SID/REVELATION
11	11.4318.005.000	REMOTE CONNECTAMAJIG COLLAR - BLACK - REVERB/XLOC FULL SPRINT
12	11.4318.002.040	REMOTE HYDRAULIC HOSE KIT - 1250MM SPRINT (INCLUDES HOSES/BARBS/COMPRESSION NUTS)(QTY 2) -XLOC MONARCH XX
13	11.4318.002.020	REMOTE HYDRAULIC HOSE KIT - 2000M XLOC FULL SPRINT CONNECTAMAJIG (INCLUDES, BARB, COMPRESSION NUT & CONNECTAMAJIG) - MONARCH XX FULLSPRINT
ns	11.4318.003.246	REAR SHOCK DECAL KIT - MONARCH R/RL/RT3/XX HIGH VOLUME BLACK CAN 190/200 B1(RL, XX), C1(R,RT3)
	TOOLS/GREASE/FLUIDS	
14	00.4315.027.010	REAR SHOCK AIR VALVE ADAPTER TOOL - REAR SHOCKS
15	00.4115.154.020	REAR SHOCK VISE BLOCKS, 3 HOLE FOR ROCKSHOX MONARCH/VIVID/VIVID AIR/REVERB
16	00.4118.013.000	REAR SHOCK BODY VISE BLOCKS, ROCKSHOX MONARCH
17	00.4315.026.010	REAR SHOCK 1/2"X1/2" BUSHING TOOL (EYELET/SEALHEAD) ROCKSHOX
18	11.4118.042.000	REAR SHOCK VOLUME REDUCER KIT - BOTTOMLESS RINGS - (INCLUDES VOLUME ADJUST RINGS, QTY 9) -MONARCH/VIVID AIR
ns	00.4315.022.010	REAR SHOCK SCHRADER VALVE REMOVAL TOOL ROCKSHOX
ns	00.4315.023.010	HIGH-PRESSURE FORK/SHOCK PUMP (300 PSI MAX) ROCKSHOX
ns	00.4315.023.030	HIGH-PRESSURE FORK/SHOCK PUMP (600 PSI MAX) ROCKSHOX
ns	00.4315.023.040	HIGH-PRESSURE FORK/SHOCK PUMP (300 PSI MAX) ROCKSHOX DIGITALGAUGE
ns	11.4115.094.010	LUBRICANT, REAR SHOCK AIR CAN, MAXIMA 15W 50, 1 LITER BOTTLE
ns	11.4115.094.030	MAXIMA SUSPENSION OIL PLUSH, 3WT 1 LITER BOTTLE - REAR SHOCK/CHARGER DAMPER
ns	11.4115.094.030	MAXIMA SUSPENSION OIL PLUSH, 3WT 1 LITER BOTTLE - REAR SHOCK/CHARGER DAMPER
ns	11.4315.021.070	ROCKSHOX REVERB HYDRAULIC FLUID, 120ML BOTTLE - REVERB/SPRINT REMOTE
ns	11.4015.354.040	ROCKSHOX REVERB HYDRAULIC FLUID, 1 LITER BOTTLE - REVERB/SPRINT REMOTE
ns	00.4318.007.001	ROCKSHOX STANDARD BLEED KIT (INCLUDES 2 SYRINGES/FITTINGS, REVERB HYDRAULIC FLUID, 120ML BOTTLE NEW)
ns	00.4318.008.002	GREASE ROCKSHOX DYNAMIC SEAL GREASE (PTFE) 1OZ - RECOMMENDED FOR SERVICING REAR SHOCKS & FORKS
ns	00.4318.008.004	GREASE ROCKSHOX DYNAMIC SEAL GREASE 500ML - RECOMMENDED FOR SERVICING REAR SHOCKS & FORKS
ns	00.4318.012.010	REAR SHOCK IFP HEIGHT TOOL (FOR SETTING IFP HEIGHT) -MONARCH/DELUXE

MONARCH XX A1-B1 (2012-2013)

Xloc remote lever assembled, includes hose

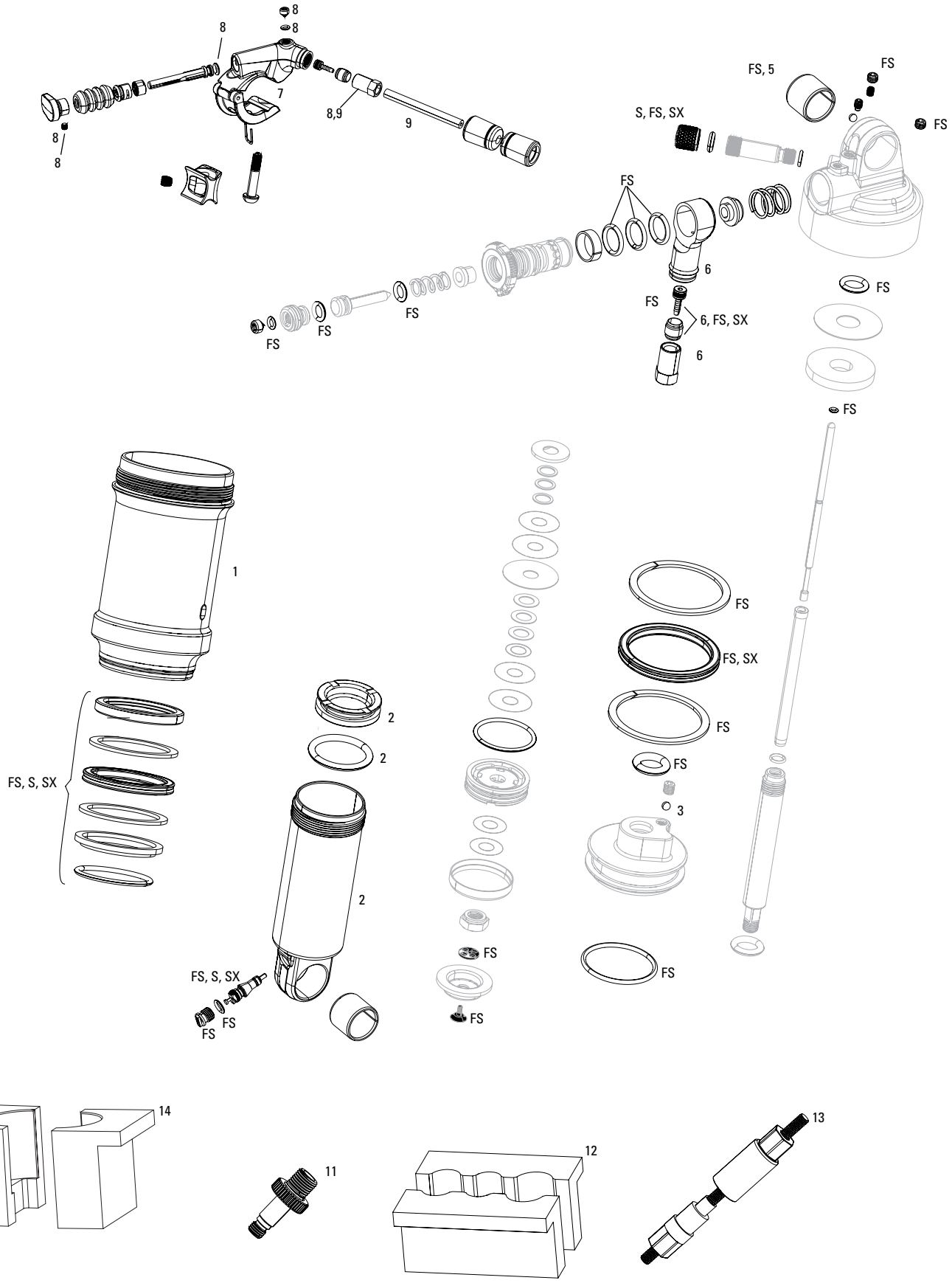

MONARCH XX A1-B1 (2012-2013)

	SERVICE	
FS	11.4118.006.000	REAR SHOCK SERVICE KIT - FULL SERVICE MONARCH XX (2012)
SX	11.4118.006.010	REAR SHOCK SERVICE KIT - BASIC - MONARCH XX (2012)
S	00.4315.032.240	AM REAR SHOCK AIR CAN SERVICE KIT, BASIC - (INCLUDES SEAL GREASE/OIL) - MONARCH/MONARCH PLUS (2012)
	AIR CAN	
1	11.4115.106.020	REAR SHOCK AIR CAN - 165X38 - MONARCH/PLUS RC3/RT/R(2011-2013) MONARCH RT3 (2011-2012)
	DAMPER	
2	11.4115.112.060	REAR SHOCK DAMPER BODY/IFP - MONARCH RT3/RL/RT/R200X57
2	11.4115.112.080	REAR SHOCK DAMPER BODY/IFP - MONARCH RT3/RL/RT/R216X63
2	11.4115.112.090	REAR SHOCK DAMPER BODY/IFP - MONARCH RT3/RL/RT/R222X66
	SPARES	
3	11.4115.132.010	REAR SHOCK NYLON BALL - BLEED PISTON SEALHEAD- MONARCH/MONARCH PLUS, QTY 20
ns	11.4308.327.002	AIR VALVE KIT - SCHRADER CORE (QTY 2) - FORKS/SHOCKS/REVERB
ns	11.4115.124.010	REAR SHOCK AIR VALVE KIT - (INCLUDES VALVE BODY, VALVE, VALVE CAP) - MONARCH/MONARCH PLUS
5	11.4115.013.000	REAR SHOCK EYELET BUSHING KIT -1/2"X1/2" (QTY 2)
6	11.4118.002.000	REAR SHOCK HOSE FITTING KIT - (INCLUDES BANJO, COMPRESSION FITTING & THREADED BARB) - MONARCH XX
7	11.4318.000.000	REMOTE - XLOC SPRINT LEFT BLACK (INCLUDES HOSE, BARB & COMPRESSION NUT) - MONARCH XX
7	11.4318.000.010	REMOTE - XLOC SPRINT RIGHT BLACK (INCLUDES HOSE, BARB & COMPRESSION NUT) - MONARCH XX
8	11.4318.001.000	REMOTE SERVICE KIT - XLOC SPRINT - MONARCH XX
9	11.4318.002.040	REMOTE HYDRAULIC HOSE KIT - 1250MM SPRINT (INCLUDES HOSES/BARBS/COMPRESSION NUTS)(QTY 2) -XLOC MONARCH XX
ns	11.4118.042.000	REAR SHOCK VOLUME REDUCER KIT - BOTTOMLESS RINGS - (INCLUDES VOLUME ADJUST RINGS, QTY 9) -MONARCH/VIVID AIR
	TOOLS/GREASE/FLUIDS	
11	00.4315.027.010	REAR SHOCK AIR VALVE ADAPTER TOOL - REAR SHOCKS
12	00.4115.154.020	REAR SHOCK VISE BLOCKS, 3 HOLE FOR ROCKSHOX MONARCH/VIVID/VIVID AIR/REVERB
13	00.4315.026.010	REAR SHOCK 1/2"X1/2" BUSHING TOOL (EYELET/SEALHEAD) ROCKSHOX
14	00.4118.013.000	REAR SHOCK BODY VISE BLOCKS, ROCKSHOX MONARCH
ns	00.4315.022.010	REAR SHOCK SCHRADER VALVE REMOVAL TOOL ROCKSHOX
ns	00.4315.023.010	HIGH-PRESSURE FORK/SHOCK PUMP (300 PSI MAX) ROCKSHOX
ns	00.4315.023.030	HIGH-PRESSURE FORK/SHOCK PUMP (600 PSI MAX) ROCKSHOX
ns	00.4315.023.040	HIGH-PRESSURE FORK/SHOCK PUMP (300 PSI MAX) ROCKSHOX DIGITALGAUGE
ns	11.4115.094.010	LUBRICANT, REAR SHOCK AIR CAN, MAXIMA 15W 50, 1 LITER BOTTLE
ns	00.4318.008.002	GREASE ROCKSHOX DYNAMIC SEAL GREASE (PTFE) 1OZ - RECOMMENDED FOR SERVICING REAR SHOCKS & FORKS
ns	00.4318.008.004	GREASE ROCKSHOX DYNAMIC SEAL GREASE 500ML - RECOMMENDED FOR SERVICING REAR SHOCKS & FORKS
ns	11.4115.094.030	MAXIMA SUSPENSION OIL PLUSH, 3WT 1 LITER BOTTLE - REAR SHOCK/CHARGER DAMPER
ns	11.4115.094.030	MAXIMA SUSPENSION OIL PLUSH, 3WT 1 LITER BOTTLE - REAR SHOCK/CHARGER DAMPER
ns	00.4318.007.001	ROCKSHOX STANDARD BLEED KIT (INCLUDES 2 SYRINGES/FITTINGS, REVERB HYDRAULIC FLUID, 120ML BOTTLE NEW)
ns	00.4318.012.010	REAR SHOCK IFP HEIGHT TOOL (FOR SETTING IFP HEIGHT) -MONARCH/DELUXE

MONARCH RT3 D1-D2 (2016-2021)

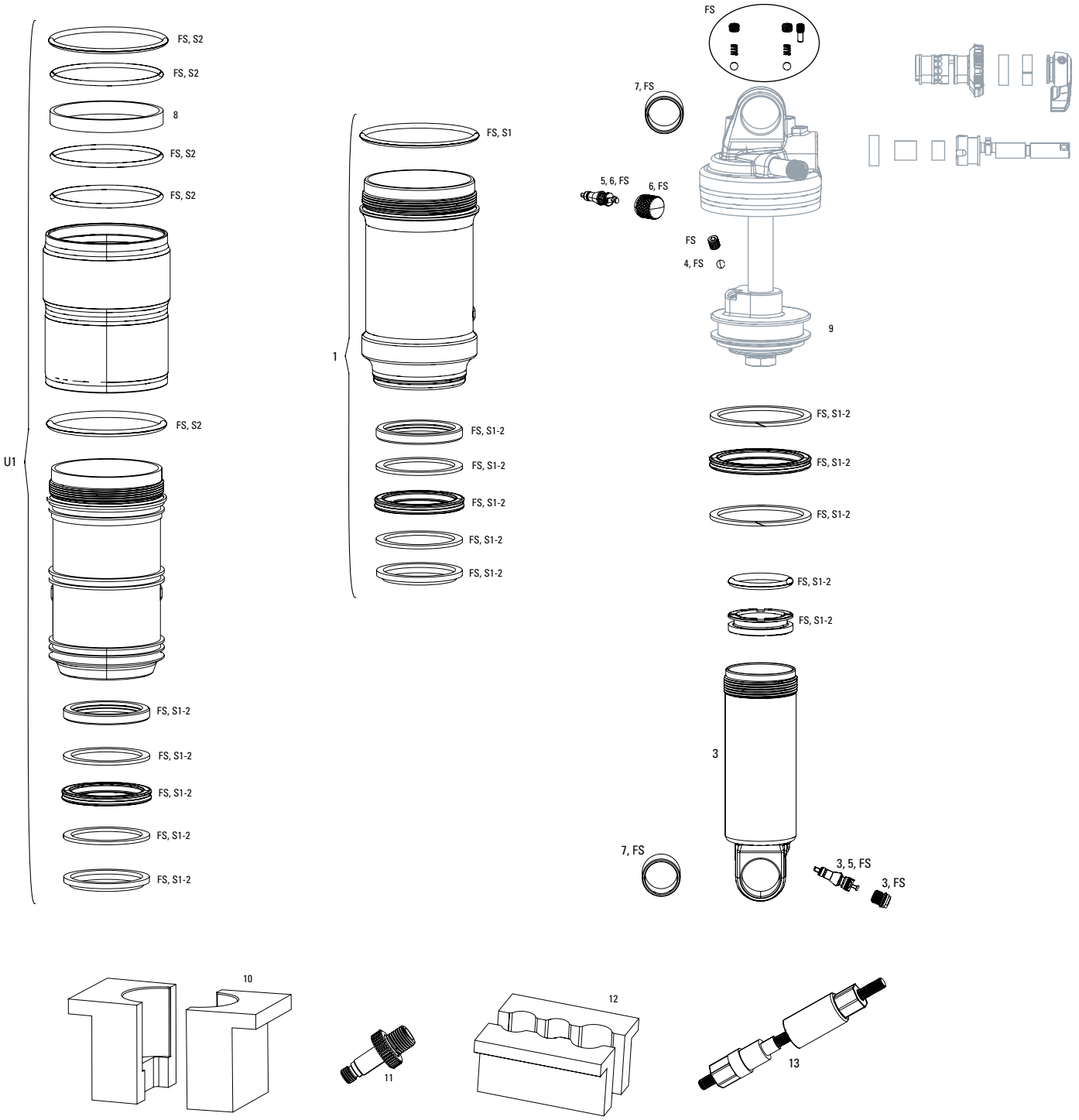

Note:

1. Service Kit Full - Monarch RT3 intended for air seal and oil change/service to damper. AM Rear Shock Air Can Service Kit, Basic - Monarch RT3 intended for air seal service only.
2. Use '1/2"x1/2" Rear Shock Bushing/Mount Hardware Tool' to remove and install eyelet bushing and mounting hardware.

MONARCH RT3 D1-D2 (2016-2021)

	UPGRADES	
U1	00.4018.783.004	AIR CAN UPGRADE KIT - DEBONAIR 165X38 (INCLUDES AIR CAN, VOLUME SPACERS, SEALS & DECALS) - B1 & LATER (MONARCH 2014+/RT32013+)
U1	00.4018.783.005	AIR CAN UPGRADE KIT - DEBONAIR 184X44 (INCLUDES AIR CAN, VOLUME SPACERS, SEALS & DECALS) - B1 & LATER (MONARCH 2014+/RT32013+)
U1	00.4018.783.006	AIR CAN UPGRADE KIT - DEBONAIR 190/200X51 (INCLUDES AIR CAN,VOLUME SPACERS, SEALS & DECALS) - B1 & LATER (MONARCH 2014+/RT3 2013+)
U1	00.4018.783.007	AIR CAN UPGRADE KIT - DEBONAIR 200X57 (INCLUDES AIR CAN, VOLUME SPACERS, SEALS & DECALS) - B1 & LATER (MONARCH 2014+/RT32013+)
U1	00.4018.783.008	AIR CAN UPGRADE KIT - DEBONAIR 216X63 (INCLUDES AIR CAN, VOLUME SPACERS, SEALS & DECALS) - B1 & LATER (MONARCH 2014+/RT32013+)
	SERVICE	
FS	11.4118.038.000	REAR SHOCK SERVICE KIT - FULL SERVICE MONARCH B1(RL) C1 (R,RT,RT3),D1 (RT3) (2014+)
S1	00.4315.032.380	AM REAR SHOCK AIR CAN SERVICE KIT, BASIC - (INCLUDES SEAL GREASE/OIL) - MONARCH B1 (PLUS,XX,RL) C1 (R,RT3) D1 (2014+)
S2	00.4315.032.540	AM REAR SHOCK AIR CAN SERVICE KIT, BASIC - (INCLUDES SEAL GREASE/OIL) - MONARCH DEBONAIR (2014+)
	AIR CAN	
1	11.4118.033.008	REAR SHOCK AIR CAN ASSEMBLY - 152X31 (INCLUDES SEALS, 15W50 & DYNAMIC SEAL GREASE) - MONARCH B1 (PLUS, RL, XX), C1(R,RT,RT3) D1(RT3)
1	11.4118.033.009	REAR SHOCK AIR CAN ASSEMBLY - 165X38 (INCLUDES SEALS, 15W50 & DYNAMIC SEAL GREASE) - MONARCH B1 (PLUS, RL, XX), C1(R,RT,RT3) D1(RT3)
1	11.4118.033.010	REAR SHOCK AIR CAN ASSEMBLY - 184X44 (INCLUDES SEALS, 15W50 & DYNAMIC SEAL GREASE) - MONARCH B1 (PLUS, RL, XX), C1(R,RT,RT3) D1(RT3)
1	11.4118.033.011	REAR SHOCK AIR CAN ASSEMBLY - 190X51/200X51 (INCLUDES SEALS, 15W50 & DYNAMIC SEAL GREASE) - MONARCH B1 (PLUS, RL, XX), C1(R,RT,RT3) D1(RT3)
1	11.4118.033.012	REAR SHOCK AIR CAN ASSEMBLY - 200X57 (INCLUDES SEALS, 15W50 & DYNAMIC SEAL GREASE) - MONARCH B1 (PLUS, RL, XX), C1(R,RT,RT3) D1(RT3)
1	11.4118.033.013	REAR SHOCK AIR CAN ASSEMBLY - 216X63 (INCLUDES SEALS, 15W50 & DYNAMIC SEAL GREASE) - MONARCH B1 (PLUS, RL, XX), C1(R,RT,RT3) D1(RT3)
2	11.4118.033.028	REAR SHOCK AIR CAN ASSEMBLY - DEBONAIR 165X38 (INCLUDES DECALS, SEALS, 15W50 & DYNAMIC SEAL GREASE) - MONARCH B1(PLUS, RL, XX), C1(R,RT,RT3) D1(RT3)
2	11.4118.033.029	REAR SHOCK AIR CAN ASSEMBLY - DEBONAIR 184X44 (INCLUDES DECALS, SEALS, 15W50 & DYNAMIC SEAL GREASE) - MONARCH B1(PLUS, RL, XX), C1(R,RT,RT3) D1(RT3)
2	11.4118.033.030	REAR SHOCK AIR CAN ASSEMBLY - DEBONAIR 190X51/200X51 (INCLUDES DECALS, SEALS, 15W50 & DYNAMIC SEAL GREASE) - MONARCH B1(PLUS, RL, XX), C1(R,RT,RT3) D1(RT3)
2	11.4118.033.031	REAR SHOCK AIR CAN ASSEMBLY - DEBONAIR 200X57 (INCLUDES DECALS, SEALS, 15W50 & DYNAMIC SEAL GREASE) - MONARCH B1(PLUS, RL, XX), C1(R,RT,RT3) D1(RT3)
2	11.4118.033.032	REAR SHOCK AIR CAN ASSEMBLY - DEBONAIR 216X63 (INCLUDES DECALS, SEALS, 15W50 & DYNAMIC SEAL GREASE) - MONARCH B1(PLUS, RL, XX), C1(R,RT,RT3) D1(RT3)
	DAMPER	
3	11.4118.037.014	REAR SHOCK DAMPER BODY/IFP - FAST BLACK, 165X38 -MONARCH 2014+
3	11.4118.037.015	REAR SHOCK DAMPER BODY/IFP - FAST BLACK, 184X44 -MONARCH 2014+
3	11.4118.037.016	REAR SHOCK DAMPER BODY/IFP - FAST BLACK, 190X51 -MONARCH 2014+
3	11.4118.037.017	REAR SHOCK DAMPER BODY/IFP - FAST BLACK, 200X51 -MONARCH 2014+
3	11.4118.037.018	REAR SHOCK DAMPER BODY/IFP - FAST BLACK, 200X57 -MONARCH 2014+
3	11.4118.037.020	REAR SHOCK DAMPER BODY/IFP - FAST BLACK, 216X63 -MONARCH 2014+
	SPARES	
4	11.4115.132.010	REAR SHOCK NYLON BALL - BLEED PISTON SEALHEAD- MONARCH/MONARCH PLUS, QTY 20
5	11.4308.327.002	AIR VALVE KIT - SCHRADER CORE (QTY 2) - FORKS/SHOCKS/REVERB
6	11.4115.124.010	REAR SHOCK AIR VALVE KIT - (INCLUDES VALVE BODY, VALVE, VALVE CAP) - MONARCH/MONARCH PLUS
7	11.4115.013.000	REAR SHOCK EYELET BUSHING KIT -1/2"X1/2" (QTY 2)
8	11.4118.042.000	REAR SHOCK VOLUME REDUCER KIT - BOTTOMLESS RINGS - (INCLUDES VOLUME ADJUST RINGS, QTY 9) -MONARCH/VIVID AIR
ns	11.4318.003.447	REAR SHOCK DECAL KIT - MONARCH RT3/RT3 DEBONAIR SILVER/BLACK 152/165/184/190/200/216
9	11.4118.013.000	REAR SHOCK AIR PISTON SEALHEAD - MONARCH B1(PLUS, RL, XX), C1(R,RT,RT3), D1(RT3)
	TOOLS/GREASE/FLUIDS	
10	00.4118.013.000	REAR SHOCK BODY VISE BLOCKS, ROCKSHOX MONARCH
11	00.4315.027.010	REAR SHOCK AIR VALVE ADAPTER TOOL - REAR SHOCKS
12	00.4115.154.020	REAR SHOCK VISE BLOCKS, 3 HOLE FOR ROCKSHOX MONARCH/VIVID/VIVID AIR/REVERB
13	00.4315.026.010	REAR SHOCK 1/2"X1/2" BUSHING TOOL (EYELET/SEALHEAD) ROCKSHOX
ns	00.4315.022.010	REAR SHOCK SCHRADER VALVE REMOVAL TOOL ROCKSHOX
ns	00.4315.023.010	HIGH-PRESSURE FORK/SHOCK PUMP (300 PSI MAX) ROCKSHOX
ns	00.4315.023.030	HIGH-PRESSURE FORK/SHOCK PUMP (600 PSI MAX) ROCKSHOX
ns	00.4315.023.040	HIGH-PRESSURE FORK/SHOCK PUMP (300 PSI MAX) ROCKSHOX DIGITALGAUGE
ns	11.4115.094.010	LUBRICANT, REAR SHOCK AIR CAN, MAXIMA 15W 50, 1 LITER BOTTLE
ns	00.4318.008.002	GREASE ROCKSHOX DYNAMIC SEAL GREASE (PTFE) 1OZ - RECOMMENDED FOR SERVICING REAR SHOCKS & FORKS
ns	00.4318.008.004	GREASE ROCKSHOX DYNAMIC SEAL GREASE 500ML - RECOMMENDED FOR SERVICING REAR SHOCKS & FORKS
ns	11.4115.094.030	MAXIMA SUSPENSION OIL PLUSH, 3WT 1 LITER BOTTLE - REAR SHOCK/CHARGER DAMPER
ns	11.4115.094.030	MAXIMA SUSPENSION OIL PLUSH, 3WT 1 LITER BOTTLE - REAR SHOCK/CHARGER DAMPER
ns	11.4115.094.040	MAXIMA SUSPENSION OIL PLUSH, 7WT 1 LITER BOTTLE - REAR SHOCK
ns	00.4318.012.010	REAR SHOCK IFP HEIGHT TOOL (FOR SETTING IFP HEIGHT) -MONARCH/DELUXE

MONARCH RT3 B1 (2013)

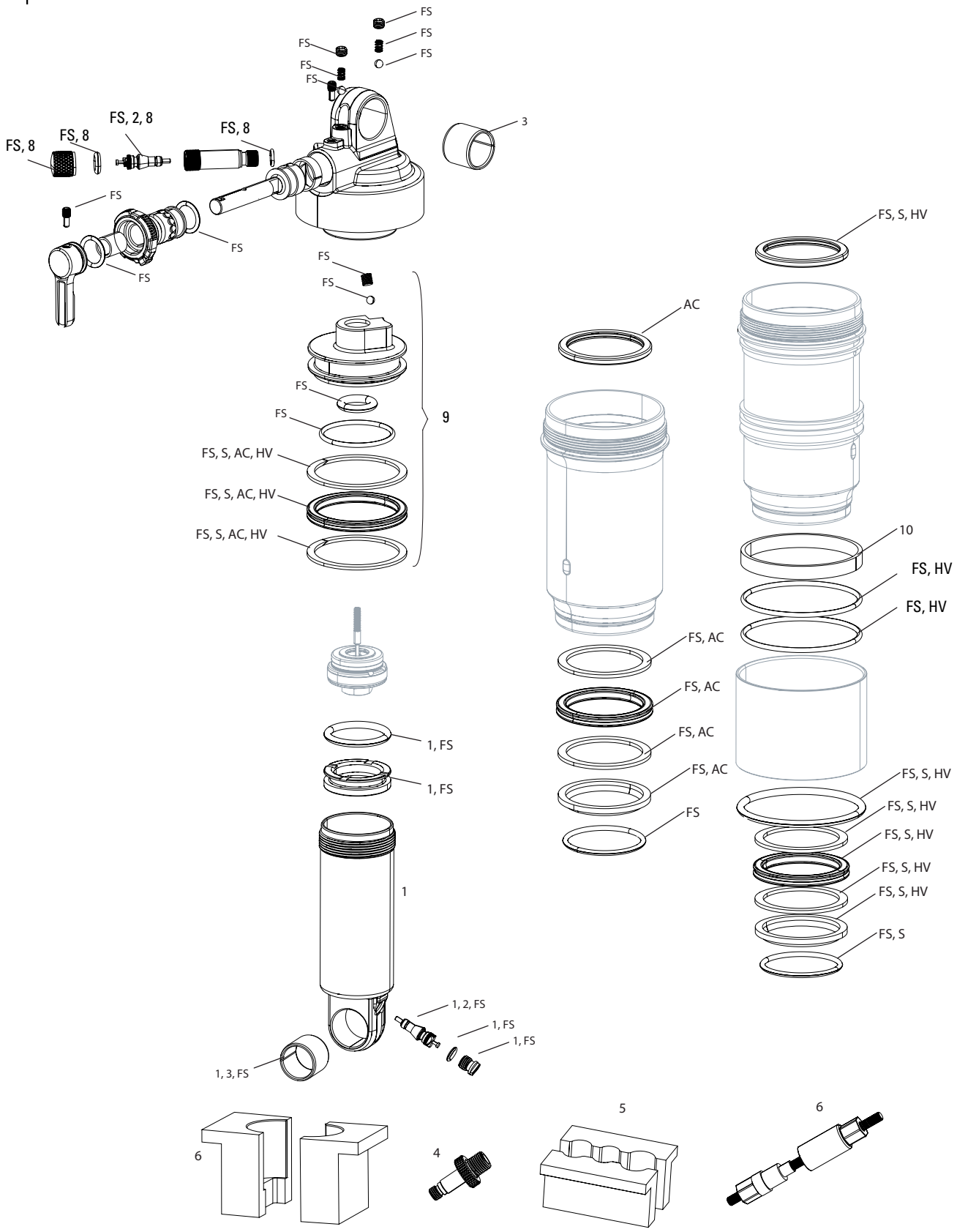

Note:

1. 2013 Monarch RT3 parts, including air cans, are not compatible with pre-2013 Monarch rear shocks.
2. 2013 Monarch RT3 shaft and shaft adjuster rod are not serviceable. Do not attempt to disassemble.
3. Use 1/2"x1/2" Rear Shock Bushing/Mount Hardware Tool' to remove and install eyelet bushing and mounting hardware.

MONARCH RT3 B1 (2013)

	SERVICE	
FS	11.4118.015.000	REAR SHOCK SERVICE KIT - FULL SERVICE MONARCH 3 RT3 (2013)
S	11.4118.015.010	REAR SHOCK SERVICE KIT - BASIC - MONARCH 3 RT3 (2013)
AC	00.4315.032.330	AM REAR SHOCK AIR CAN SERVICE KIT, BASIC - (INCLUDES SEAL GREASE/OIL) - MONARCH RT3 (2013)
HV	00.4315.032.340	AM REAR SHOCK AIR CAN HIGH VOLUME SERVICE KIT, BASIC - (INCLUDES SEAL GREASE/OIL) - MONARCH RT3 (2013)
	DAMPER	
1	11.4115.112.060	REAR SHOCK DAMPER BODY/IFP - MONARCH RT3/RL/RT/R200X57
1	11.4115.112.080	REAR SHOCK DAMPER BODY/IFP - MONARCH RT3/RL/RT/R216X63
1	11.4115.112.090	REAR SHOCK DAMPER BODY/IFP - MONARCH RT3/RL/RT/R222X66
	SPARES	
2	11.4308.327.002	AIR VALVE KIT - SCHRADER CORE (QTY 2) - FORKS/SHOCKS/REVERB
3	11.4115.013.000	REAR SHOCK EYELET BUSHING KIT -1/2"X1/2" (QTY 2)
8	11.4115.124.010	REAR SHOCK AIR VALVE KIT - (INCLUDES VALVE BODY, VALVE, VALVE CAP) - MONARCH/MONARCH PLUS
9	11.4118.013.000	REAR SHOCK AIR PISTON SEALHEAD - MONARCH B1(PLUS, RL, XX), C1(R,RT,RT3), D1(RT3)
10	11.4118.042.000	REAR SHOCK VOLUME REDUCER KIT - BOTTOMLESS RINGS - (INCLUDES VOLUME ADJUST RINGS, QTY 9) -MONARCH/VIVID AIR
	TOOLS/GREASE/FLUIDS	
4	00.4315.027.010	REAR SHOCK AIR VALVE ADAPTER TOOL - REAR SHOCKS
5	00.4115.154.020	REAR SHOCK VISE BLOCKS, 3 HOLE FOR ROCKSHOX MONARCH/VIVID/VIVID AIR/REVERB
6	00.4118.013.000	REAR SHOCK BODY VISE BLOCKS, ROCKSHOX MONARCH
7	00.4315.026.010	REAR SHOCK 1/2"X1/2" BUSHING TOOL (EYELET/SEALHEAD) ROCKSHOX
ns	00.4315.022.010	REAR SHOCK SCHRADER VALVE REMOVAL TOOL ROCKSHOX
ns	00.4315.023.010	HIGH-PRESSURE FORK/SHOCK PUMP (300 PSI MAX) ROCKSHOX
ns	00.4315.023.030	HIGH-PRESSURE FORK/SHOCK PUMP (600 PSI MAX) ROCKSHOX
ns	00.4315.023.040	HIGH-PRESSURE FORK/SHOCK PUMP (300 PSI MAX) ROCKSHOX DIGITALGAUGE
ns	11.4115.094.010	LUBRICANT, REAR SHOCK AIR CAN, MAXIMA 15W 50, 1 LITER BOTTLE
ns	00.4318.008.002	GREASE ROCKSHOX DYNAMIC SEAL GREASE (PTFE) 1OZ - RECOMMENDED FOR SERVICING REAR SHOCKS & FORKS
ns	00.4318.008.004	GREASE ROCKSHOX DYNAMIC SEAL GREASE 500ML - RECOMMENDED FOR SERVICING REAR SHOCKS & FORKS
ns	11.4115.094.040	MAXIMA SUSPENSION OIL PLUSH, 7WT 1 LITER BOTTLE - REAR SHOCK
ns	00.4318.012.010	REAR SHOCK IFP HEIGHT TOOL (FOR SETTING IFP HEIGHT) -MONARCH/DELUXE

MONARCH R / RT / RL (2011-2013) / RT3 A1 (2011-2012)

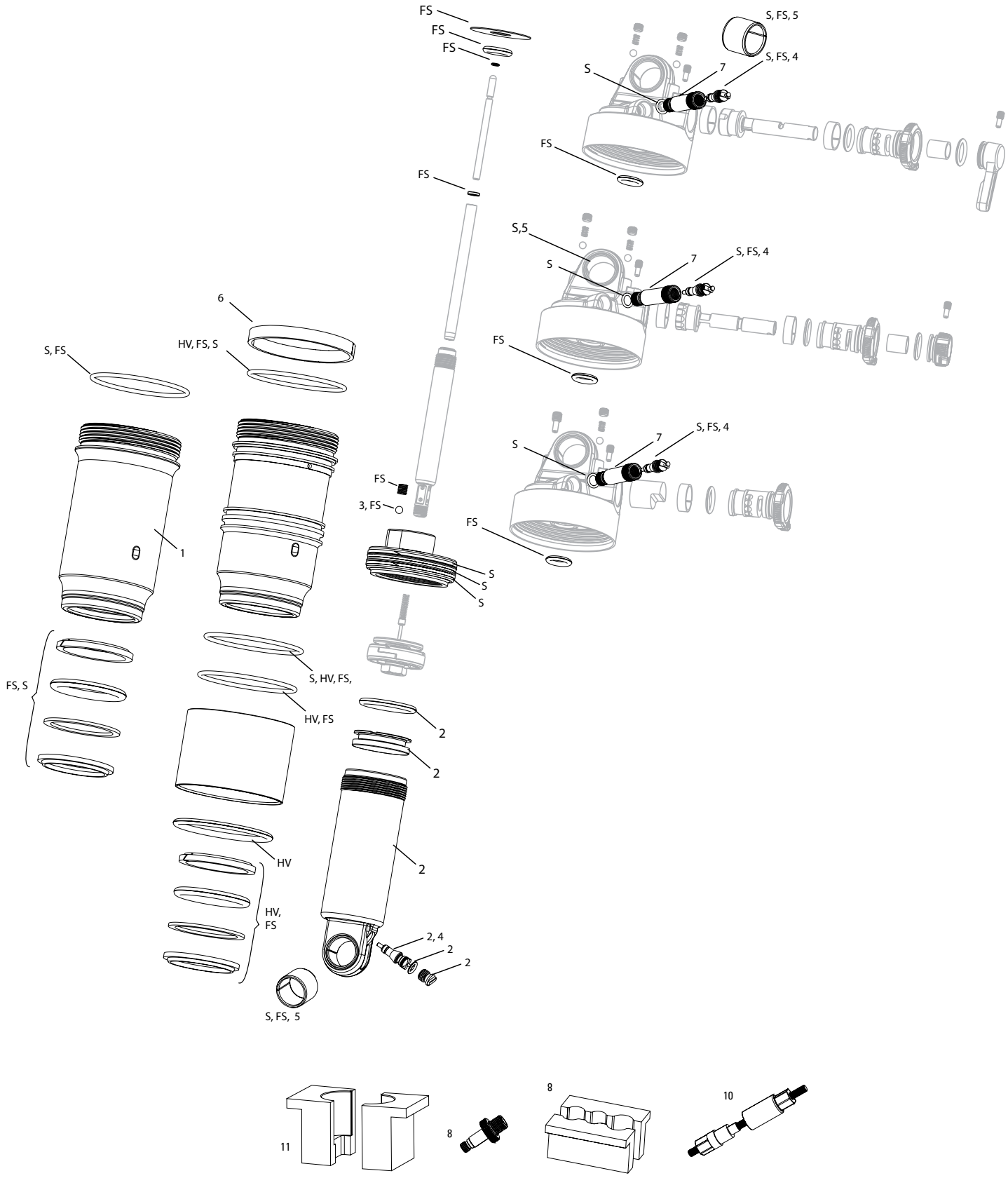

Note:

1. 2011-2012 Monarch parts are not compatible with pre-2011 Monarch rear shocks. 2011-2012 Monarch RT3 parts are not compatible with 2013 Monarch RT3.
2. Use '1/2"x1/2" Rear Shock Bushing/Mount Hardware Tool' to remove and install eyelet bushing and mounting hardware.
3. Air can assemblies are compatible with Monarch R, RL, RT3, and XX; not compatible with 2013 Monarch RT3.

MONARCH R / RT / RL (2011-2013) / RT3 A1 (2011-2012)

	SERVICE	
FS	11.4115.113.010	REAR SHOCK SERVICE KIT - FULL SERVICE MONARCH RT3/RT/R 2011
S	11.4115.113.020	REAR SHOCK SERVICE KIT - BASIC - MONARCH RT3/RT/R 2011
S	00.4315.032.240	AM REAR SHOCK AIR CAN SERVICE KIT, BASIC - (INCLUDES SEAL GREASE/OIL) - MONARCH/MONARCH PLUS (2012)
HV	00.4315.032.250	AM REAR SHOCK AIR CAN HIGH VOLUME SERVICE KIT, BASIC - (INCLUDES SEAL GREASE/OIL) - MONARCH/MONARCH PLUS (2012)
	AIR CAN	
1	11.4115.106.020	REAR SHOCK AIR CAN - 165X38 - MONARCH/PLUS RC3/RT/R(2011-2013) MONARCH RT3 (2011-2012)
	DAMPER	
2	11.4115.112.060	REAR SHOCK DAMPER BODY/IFP - MONARCH RT3/RL/RT/R200X57
2	11.4115.112.080	REAR SHOCK DAMPER BODY/IFP - MONARCH RT3/RL/RT/R216X63
2	11.4115.112.090	REAR SHOCK DAMPER BODY/IFP - MONARCH RT3/RL/RT/R222X66
	SPARES	
3	11.4115.132.010	REAR SHOCK NYLON BALL - BLEED PISTON SEALHEAD- MONARCH/MONARCH PLUS, QTY 20
4	11.4308.327.002	AIR VALVE KIT - SCHRADER CORE (QTY 2) - FORKS/SHOCKS/REVERB
5	11.4115.013.000	REAR SHOCK EYELET BUSHING KIT -1/2"X1/2" (QTY 2)
6	11.4118.042.000	REAR SHOCK VOLUME REDUCER KIT - BOTTOMLESS RINGS - (INCLUDES VOLUME ADJUST RINGS, QTY 9) -MONARCH/VIVID AIR
7	11.4115.124.010	REAR SHOCK AIR VALVE KIT - (INCLUDES VALVE BODY, VALVE, VALVE CAP) - MONARCH/MONARCH PLUS
	TOOLS/GREASE/FLUIDS	
8	00.4315.027.010	REAR SHOCK AIR VALVE ADAPTER TOOL - REAR SHOCKS
9	00.4115.154.020	REAR SHOCK VISE BLOCKS, 3 HOLE FOR ROCKSHOX MONARCH/VIVID/VIVID AIR/REVERB
10	00.4315.026.010	REAR SHOCK 1/2"X1/2" BUSHING TOOL (EYELET/SEALHEAD) ROCKSHOX
11	00.4118.013.000	REAR SHOCK BODY VISE BLOCKS, ROCKSHOX MONARCH
ns	00.4315.022.010	REAR SHOCK SCHRADER VALVE REMOVAL TOOL ROCKSHOX
ns	00.4315.023.010	HIGH-PRESSURE FORK/SHOCK PUMP (300 PSI MAX) ROCKSHOX
ns	00.4315.023.030	HIGH-PRESSURE FORK/SHOCK PUMP (600 PSI MAX) ROCKSHOX
ns	00.4315.023.040	HIGH-PRESSURE FORK/SHOCK PUMP (300 PSI MAX) ROCKSHOX DIGITALGAUGE
ns	11.4115.094.010	LUBRICANT, REAR SHOCK AIR CAN, MAXIMA 15W 50, 1 LITER BOTTLE
ns	00.4318.008.002	GREASE ROCKSHOX DYNAMIC SEAL GREASE (PTFE) 1OZ - RECOMMENDED FOR SERVICING REAR SHOCKS & FORKS
ns	00.4318.008.004	GREASE ROCKSHOX DYNAMIC SEAL GREASE 500ML - RECOMMENDED FOR SERVICING REAR SHOCKS & FORKS
ns	11.4115.094.030	MAXIMA SUSPENSION OIL PLUSH, 3WT 1 LITER BOTTLE - REAR SHOCK/CHARGER DAMPER
ns	11.4115.094.030	MAXIMA SUSPENSION OIL PLUSH, 3WT 1 LITER BOTTLE - REAR SHOCK/CHARGER DAMPER
ns	00.4318.012.010	REAR SHOCK IFP HEIGHT TOOL (FOR SETTING IFP HEIGHT) -MONARCH/DELUXE

MONARCH R C1-D2 (2014-2020)

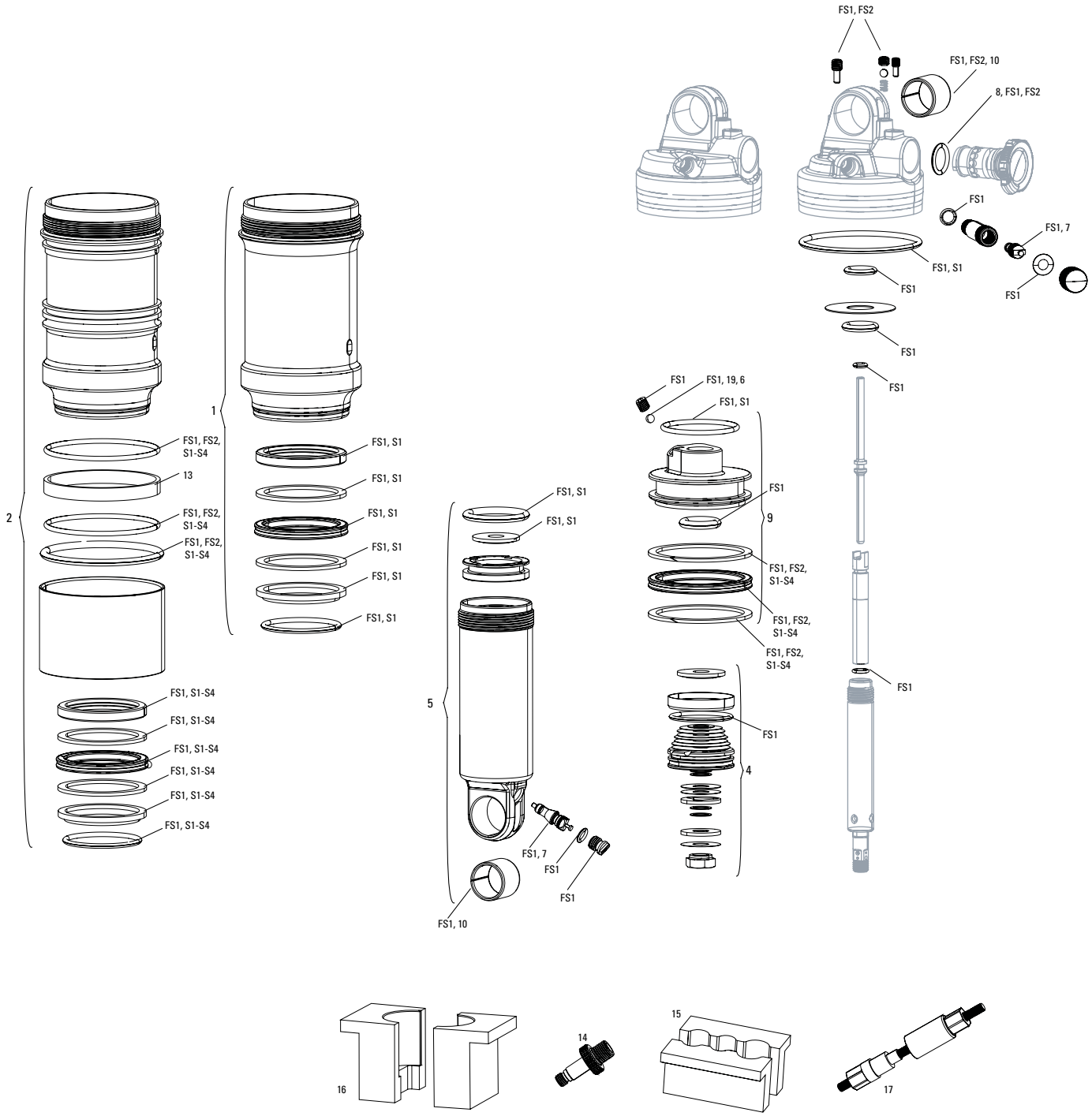

Note:

1. All 2014+ Monarch shocks are compatible with standard, DebonAir and high-volume air can assemblies; air can includes all seals installed.
2. Monarch Service Kit (full) intended for air seal and oil change/service to damper. Monarch Service Kit (basic) intended for air seal service only.
4. Use '1/2"x1/2" Rear Shock Bushing/Mount Hardware Tool' to remove and install eyelet bushing and mounting hardware.
5. All 2014+ Air can assemblies are compatible with Monarch R, RL, RT3, and XX.

MONARCH RT C1-D2 (2014-2018)/RL B1-C2 (2014-2018)
MONARCH RT3 C1-C3 (2014-2015)

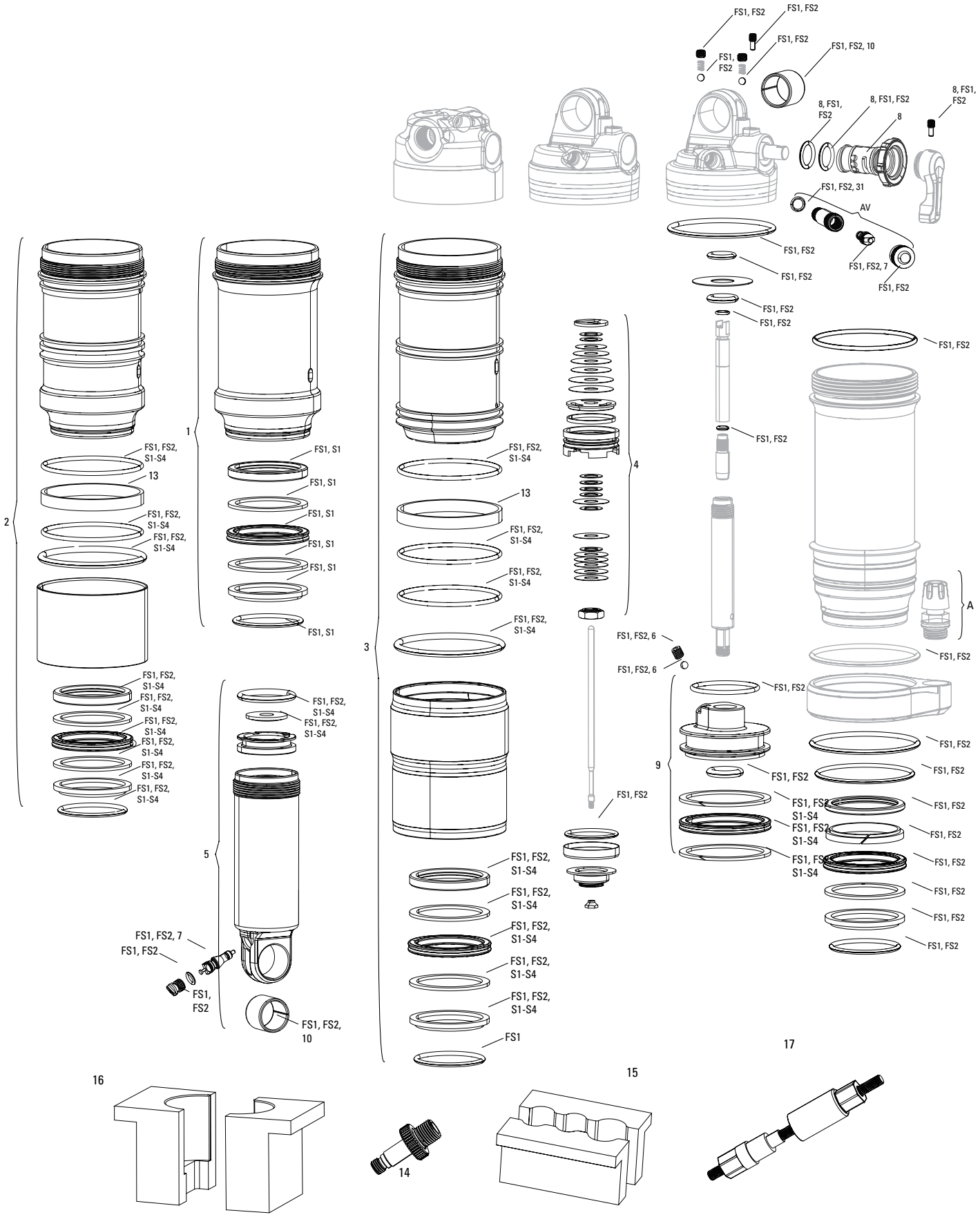
FS1, FS2
FS1, FS2
FS1, FS2
FS1, FS2, 10
FS1, FS2
8, FS1, FS2
8, FS1, FS2
8
8, FS1, FS2
FS1, FS2, 31
AV
FS1, FS2
FS1, FS2
FS1, FS2, 7
FS1, FS2
FS1, FS2
FS1, FS2

MONARCH R C1-D2 (2014-2020)/ RT C1-D2 (2014-2018)
MONARCH RL B1-C2 (2014-2018) / RT3 C1-C3 (2014-2015)

	UPGRADES	
ns	00.4018.783.004	AIR CAN UPGRADE KIT - DEBONAIR 165X38 (INCLUDES AIR CAN, VOLUME SPACERS, SEALS & DECALS) - B1 & LATER (MONARCH 2014+/RT32013+)
ns	00.4018.783.005	AIR CAN UPGRADE KIT - DEBONAIR 184X44 (INCLUDES AIR CAN, VOLUME SPACERS, SEALS & DECALS) - B1 & LATER (MONARCH 2014+/RT32013+)
ns	00.4018.783.006	AIR CAN UPGRADE KIT - DEBONAIR 190/200X51 (INCLUDES AIR CAN,VOLUME SPACERS, SEALS & DECALS) - B1 & LATER (MONARCH 2014+/RT3 2013+)
ns	00.4018.783.007	AIR CAN UPGRADE KIT - DEBONAIR 200X57 (INCLUDES AIR CAN, VOLUME SPACERS, SEALS & DECALS) - B1 & LATER (MONARCH 2014+/RT32013+)
ns	00.4018.783.008	AIR CAN UPGRADE KIT - DEBONAIR 216X63 (INCLUDES AIR CAN, VOLUME SPACERS, SEALS & DECALS) - B1 & LATER (MONARCH 2014+/RT32013+)
	SERVICE	
FS1	11.4118.038.000	REAR SHOCK SERVICE KIT - FULL SERVICE MONARCH B1(RL) C1 (R,RT,RT3),D1 (RT3) (2014+)
FS2	11.4418.002.010	REAR SHOCKSERVICE KIT FULL- MONARCH WITH AUTOSAG SPECIALIZED B1
S1	00.4315.032.380	AM REAR SHOCK AIR CAN SERVICE KIT, BASIC - (INCLUDES SEAL GREASE/OIL) - MONARCH B1 (PLUS,XX,RL) C1 (R,RT3) D1 (2014+)
S2	00.4315.032.390	AM REAR SHOCK AIR CAN SERVICE KIT, BASIC - (INCLUDES SEAL GREASE/OIL) - MONARCH HIGH VOLUME B1 (PLUS,XX,RL) C1 (R,RT3) (2014+)
S3	00.4315.032.480	AM REAR SHOCK AIR CAN SERVICE KIT, BASIC - (INCLUDES SEAL GREASE/OIL) - MONARCH AUTO SAGB1 (2014+)
S4	00.4315.032.540	AM REAR SHOCK AIR CAN SERVICE KIT, BASIC - (INCLUDES SEAL GREASE/OIL) - MONARCH DEBONAIR (2014+)
	AIR CAN	
A	11.4418.001.001	REAR SHOCK SPARE PARTS AIR CAN WITH AUTOSAG BLACK MONARCH 197X48 2014
1	11.4118.033.008	REAR SHOCK AIR CAN ASSEMBLY - 152X31 (INCLUDES SEALS, 15W50 & DYNAMIC SEAL GREASE) - MONARCH B1 (PLUS, RL, XX), C1(R,RT,RT3) D1(RT3)
1	11.4118.033.009	REAR SHOCK AIR CAN ASSEMBLY - 165X38 (INCLUDES SEALS, 15W50 & DYNAMIC SEAL GREASE) - MONARCH B1 (PLUS, RL, XX), C1(R,RT,RT3) D1(RT3)
1	11.4118.033.010	REAR SHOCK AIR CAN ASSEMBLY - 184X44 (INCLUDES SEALS, 15W50 & DYNAMIC SEAL GREASE) - MONARCH B1 (PLUS, RL, XX), C1(R,RT,RT3) D1(RT3)
1	11.4118.033.011	REAR SHOCK AIR CAN ASSEMBLY - 190X51/200X51 (INCLUDES SEALS, 15W50 & DYNAMIC SEAL GREASE) - MONARCH B1 (PLUS, RL, XX), C1(R,RT,RT3) D1(RT3)
1	11.4118.033.012	REAR SHOCK AIR CAN ASSEMBLY - 200X57 (INCLUDES SEALS, 15W50 & DYNAMIC SEAL GREASE) - MONARCH B1 (PLUS, RL, XX), C1(R,RT,RT3) D1(RT3)
1	11.4118.033.013	REAR SHOCK AIR CAN ASSEMBLY - 216X63 (INCLUDES SEALS, 15W50 & DYNAMIC SEAL GREASE) - MONARCH B1 (PLUS, RL, XX), C1(R,RT,RT3) D1(RT3)
2	11.4118.033.014	REAR SHOCK AIR CAN ASSEMBLY - HIGH VOLUME 165X38 (INCLUDES SEALS, 15W50 & DYNAMIC SEAL GREASE) - MONARCH B1(PLUS, RL, XX), C1(R,RT,RT3)
2	11.4118.033.015	REAR SHOCK AIR CAN ASSEMBLY - HIGH VOLUME 190X51/200X51 (INCLUDES SEALS, 15W50 & DYNAMIC SEAL GREASE) - MONARCH B1(PLUS, RL, XX), C1(R,RT,RT3)
2	11.4118.033.016	REAR SHOCK AIR CAN ASSEMBLY - HIGH VOLUME 200X57 (INCLUDES SEALS, 15W50 & DYNAMIC SEAL GREASE) - MONARCH B1(PLUS, RL, XX), C1(R,RT,RT3)
2	11.4118.033.017	REAR SHOCK AIR CAN ASSEMBLY - HIGH VOLUME 216X63 (INCLUDES SEALS, 15W50 & DYNAMIC SEAL GREASE) - MONARCH B1(PLUS, RL, XX), C1(R,RT,RT3)
3	11.4118.033.028	REAR SHOCK AIR CAN ASSEMBLY - DEBONAIR 165X38 (INCLUDES DECALS, SEALS, 15W50 & DYNAMIC SEAL GREASE) - MONARCH B1(PLUS, RL, XX), C1(R,RT,RT3) D1(RT3)
3	11.4118.033.029	REAR SHOCK AIR CAN ASSEMBLY - DEBONAIR 184X44 (INCLUDES DECALS, SEALS, 15W50 & DYNAMIC SEAL GREASE) - MONARCH B1(PLUS, RL, XX), C1(R,RT,RT3) D1(RT3)
3	11.4118.033.030	REAR SHOCK AIR CAN ASSEMBLY - DEBONAIR 190X51/200X51 (INCLUDES DECALS, SEALS, 15W50 & DYNAMIC SEAL GREASE) - MONARCH B1(PLUS, RL, XX), C1(R,RT,RT3) D1(RT3)
3	11.4118.033.031	REAR SHOCK AIR CAN ASSEMBLY - DEBONAIR 200X57 (INCLUDES DECALS, SEALS, 15W50 & DYNAMIC SEAL GREASE) - MONARCH B1(PLUS, RL, XX), C1(R,RT,RT3) D1(RT3)
3	11.4118.033.032	REAR SHOCK AIR CAN ASSEMBLY - DEBONAIR 216X63 (INCLUDES DECALS, SEALS, 15W50 & DYNAMIC SEAL GREASE) - MONARCH B1(PLUS, RL, XX), C1(R,RT,RT3) D1(RT3)
	TUNE	
4	11.4118.023.004	REAR SHOCK TUNE ASSEMBLY - MONARCH R REB-LOW/COMP-LOW(CF-80LBS), C1
4	11.4118.023.005	REAR SHOCK TUNE ASSEMBLY - MONARCH R REB-LOW/COMP-MID(CF-97LBS), C1
4	11.4118.023.006	REAR SHOCK TUNE ASSEMBLY - MONARCH R REB-MID/COMP-LOW3 (CF-60 LBS), C1
4	11.4118.023.007	REAR SHOCK TUNE ASSEMBLY - MONARCH R REB-MID/COMP-LOW(CF-80LBS), C1
4	11.4118.023.008	REAR SHOCK TUNE ASSEMBLY - MONARCH R REB-MID/COMP-MID(CF-97LBS), C1
	DAMPER	
5	11.4118.037.014	REAR SHOCK DAMPER BODY/IFP - FAST BLACK, 165X38 -MONARCH 2014+
5	11.4118.037.015	REAR SHOCK DAMPER BODY/IFP - FAST BLACK, 184X44 -MONARCH 2014+
5	11.4118.037.016	REAR SHOCK DAMPER BODY/IFP - FAST BLACK, 190X51 -MONARCH 2014+
5	11.4118.037.017	REAR SHOCK DAMPER BODY/IFP - FAST BLACK, 200X51 -MONARCH 2014+
5	11.4118.037.018	REAR SHOCK DAMPER BODY/IFP - FAST BLACK, 200X57 -MONARCH 2014+
5	11.4118.037.020	REAR SHOCK DAMPER BODY/IFP - FAST BLACK, 216X63 -MONARCH 2014+
5	11.4118.037.021	REAR SHOCK DAMPER BODY/IFP - FAST BLACK, 184X48 -MONARCH 2014-2016 TREK
5	11.4118.037.022	REAR SHOCK DAMPER BODY/IFP - FAST BLACK, 197X54 -MONARCH 2014-2016 TREK
5	11.4118.037.023	REAR SHOCK DAMPER BODY/IFP - FAST BLACK, 197X57 -MONARCH 2014-2016 TREK
5	11.4118.037.028	REAR SHOCK DAMPER BODY/IFP - FAST BLACK, 197X48 -MONARCH 2014-2015 CAMBER/RUMOR 29 (2013-2014)
5	11.4118.037.029	REAR SHOCK DAMPER BODY/IFP - FAST BLACK, 197X51 -MONARCH 2014-2015 CAMBER EVO 29 (2014)
ns	11.4115.112.080	REAR SHOCK DAMPER BODY/IFP - MONARCH RT3/RL/RT/R216X63
	SPARES	
6	11.4115.132.010	REAR SHOCK NYLON BALL - BLEED PISTON SEALHEAD- MONARCH/MONARCH PLUS, QTY 20
7	11.4308.327.002	AIR VALVE KIT - SCHRADER CORE (QTY 2) - FORKS/SHOCKS/REVERB
8	11.4115.107.050	REAR SHOCK REBOUND KNOB/COMPRESSION KNOB KIT - MONARCH RL/RT, B1(RL),C1(RT)
9	11.4118.013.000	REAR SHOCK AIR PISTON SEALHEAD - MONARCH B1(PLUS, RL, XX), C1(R,RT,RT3), D1(RT3)
AV	11.4115.124.010	REAR SHOCK AIR VALVE KIT - (INCLUDES VALVE BODY, VALVE, VALVE CAP) - MONARCH/MONARCH PLUS
10	11.4115.013.000	REAR SHOCK EYELET BUSHING KIT -1/2"X1/2" (QTY 2)
13	11.4118.042.000	REAR SHOCK VOLUME REDUCER KIT - BOTTOMLESS RINGS - (INCLUDES VOLUME ADJUST RINGS, QTY 9) -MONARCH/VIVID AIR
ns	11.4318.003.447	REAR SHOCK DECAL KIT - MONARCH RT3/RT3 DEBONAIR SILVER/BLACK 152/165/184/190/200/216
ns	11.4318.003.246	REAR SHOCK DECAL KIT - MONARCH R/RL/RT3/XX HIGH VOLUME BLACK CAN 190/200 B1(RL, XX), C1(R,RT3)
	TOOLS/GREASE/FLUIDS	
14	00.4315.027.010	REAR SHOCK AIR VALVE ADAPTER TOOL - REAR SHOCKS
15	00.4115.154.020	REAR SHOCK VISE BLOCKS, 3 HOLE FOR ROCKSHOX MONARCH/VIVID/VIVID AIR/REVERB
16	00.4118.013.000	REAR SHOCK BODY VISE BLOCKS, ROCKSHOX MONARCH
17	00.4315.026.010	REAR SHOCK 1/2"X1/2" BUSHING TOOL (EYELET/SEALHEAD) ROCKSHOX
ns	00.4315.022.010	REAR SHOCK SCHRADER VALVE REMOVAL TOOL ROCKSHOX
ns	00.4315.023.010	HIGH-PRESSURE FORK/SHOCK PUMP (300 PSI MAX) ROCKSHOX
ns	00.4315.023.030	HIGH-PRESSURE FORK/SHOCK PUMP (600 PSI MAX) ROCKSHOX
ns	00.4315.023.040	HIGH-PRESSURE FORK/SHOCK PUMP (300 PSI MAX) ROCKSHOX DIGITALGAUGE
ns	11.4115.094.010	LUBRICANT, REAR SHOCK AIR CAN, MAXIMA 15W 50, 1 LITER BOTTLE
ns	00.4318.008.002	GREASE ROCKSHOX DYNAMIC SEAL GREASE (PTFE) 10Z - RECOMMENDED FOR SERVICING REAR SHOCKS & FORKS
ns	00.4318.008.004	GREASE ROCKSHOX DYNAMIC SEAL GREASE 500ML - RECOMMENDED FOR SERVICING REAR SHOCKS & FORKS
ns	11.4115.094.030	MAXIMA SUSPENSION OIL PLUSH, 3WT 1 LITER BOTTLE - REAR SHOCK/CHARGER DAMPER
ns	11.4115.094.030	MAXIMA SUSPENSION OIL PLUSH, 3WT 1 LITER BOTTLE - REAR SHOCK/CHARGER DAMPER
ns	11.4115.094.040	MAXIMA SUSPENSION OIL PLUSH, 7WT 1 LITER BOTTLE - REAR SHOCK
ns	00.4318.012.010	REAR SHOCK IFP HEIGHT TOOL (FOR SETTING IFP HEIGHT) -MONARCH/DELUXE

MONARCH PLUS R B1-B4 (2014-2020)

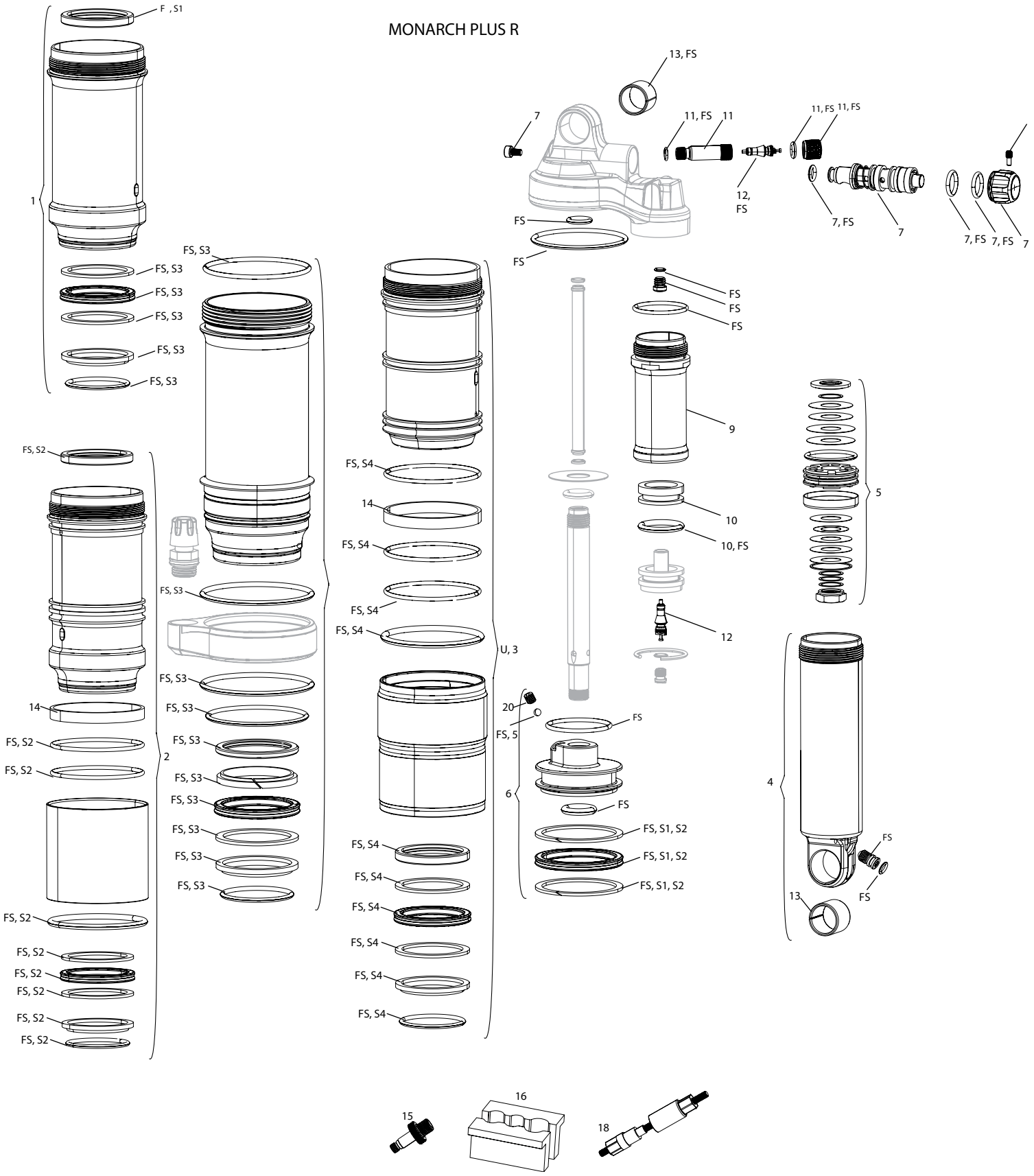

Note:

1. All 2014+ Monarch Plus shocks are compatible with standard, DebonAir and high-volume air can assemblies; air can includes all seals installed.
2. Use '1/2"x1/2" Rear Shock Bushing/Mount Hardware Tool' to remove and install eyelet bushing and mounting hardware.

MONARCH PLUS RT B1-B4 (2014-2021)

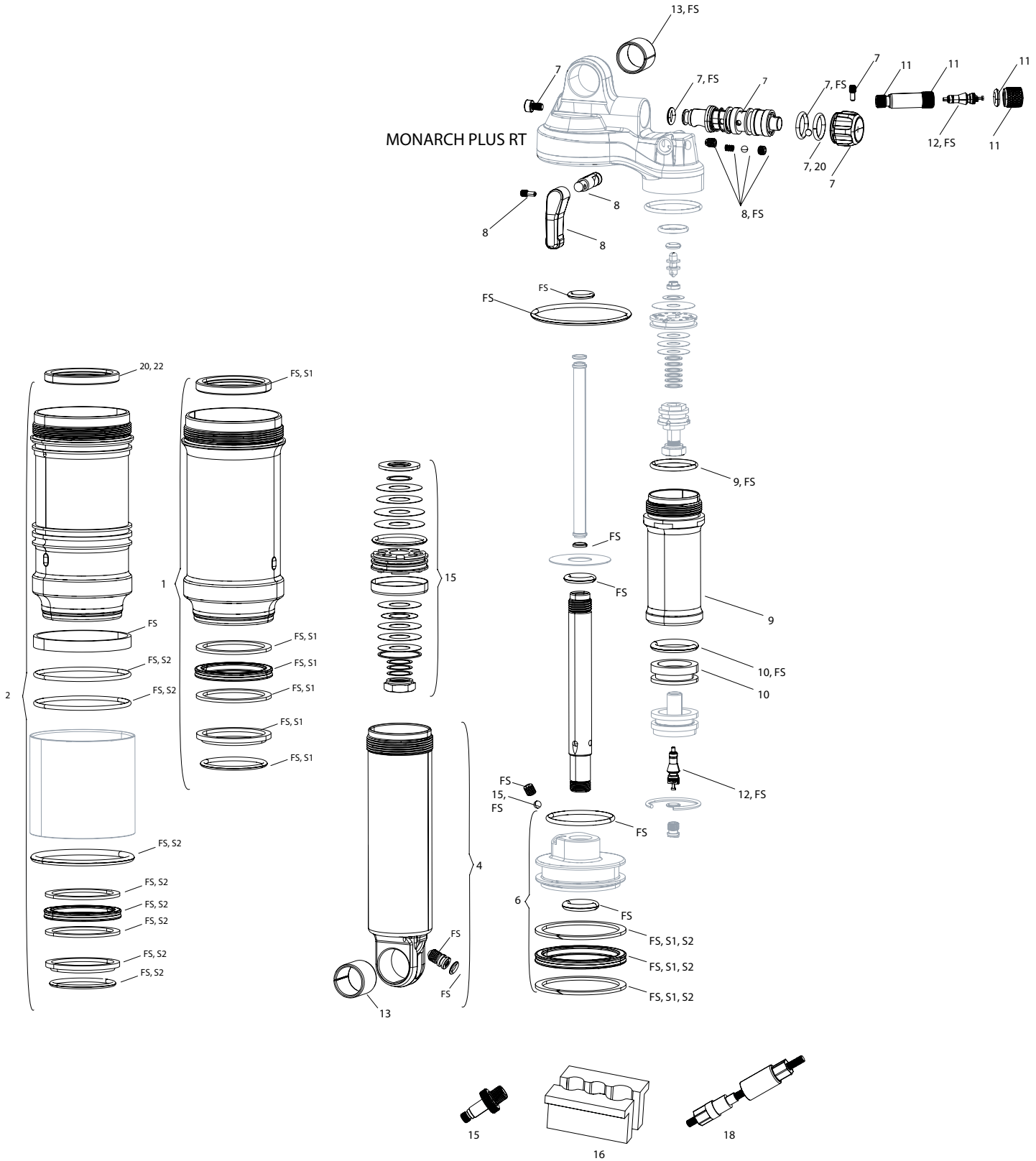

MONARCH PLUS R/RT B1-B4 (2014-2021)

	UPGRADE	
U	00.4018.783.004	AIR CAN UPGRADE KIT - DEBONAIR 165X38 (INCLUDES AIR CAN, VOLUME SPACERS, SEALS & DECALS) - B1 & LATER (MONARCH 2014+/RT32013+)
U	00.4018.783.005	AIR CAN UPGRADE KIT - DEBONAIR 184X44 (INCLUDES AIR CAN, VOLUME SPACERS, SEALS & DECALS) - B1 & LATER (MONARCH 2014+/RT32013+)
U	00.4018.783.006	AIR CAN UPGRADE KIT - DEBONAIR 190/200X51 (INCLUDES AIR CAN,VOLUME SPACERS, SEALS & DECALS) - B1 & LATER (MONARCH 2014+/RT3 2013+)
U	00.4018.783.007	AIR CAN UPGRADE KIT - DEBONAIR 200X57 (INCLUDES AIR CAN, VOLUME SPACERS, SEALS & DECALS) - B1 & LATER (MONARCH 2014+/RT32013+)
U	00.4018.783.008	AIR CAN UPGRADE KIT - DEBONAIR 216X63 (INCLUDES AIR CAN, VOLUME SPACERS, SEALS & DECALS) - B1 & LATER (MONARCH 2014+/RT32013+)
	SERVICE	
FS	11.4118.038.002	REAR SHOCK SERVICE KIT - FULL SERVICE (INCLUDES DEBONAIR AIR CAN SEALS) - MONARCH PLUS B1 (2014-2018)
S1	00.4315.032.380	AM REAR SHOCK AIR CAN SERVICE KIT, BASIC - (INCLUDES SEAL GREASE/OIL) - MONARCH B1 (PLUS,XX,RL) C1 (R,RT3) D1 (2014+)
S2	00.4315.032.390	AM REAR SHOCK AIR CAN SERVICE KIT, BASIC - (INCLUDES SEAL GREASE/OIL) - MONARCH HIGH VOLUME B1 (PLUS,XX,RL) C1 (R,RT3) (2014+)
S3	11.4418.002.000	REAR SHOCKSERVICE KIT BASIC- MONARCH WITH AUTOSAG SPECIALIZED B1
S4	00.4315.032.540	AM REAR SHOCK AIR CAN SERVICE KIT, BASIC - (INCLUDES SEAL GREASE/OIL) - MONARCH DEBONAIR (2014+)
	AIR CAN	
1	11.4118.033.008	REAR SHOCK AIR CAN ASSEMBLY - 152X31 (INCLUDES SEALS, 15W50 & DYNAMIC SEAL GREASE) - MONARCH B1 (PLUS, RL, XX), C1(R,RT,RT3) D1(RT3)
1	11.4118.033.009	REAR SHOCK AIR CAN ASSEMBLY - 165X38 (INCLUDES SEALS, 15W50 & DYNAMIC SEAL GREASE) - MONARCH B1 (PLUS, RL, XX), C1(R,RT,RT3) D1(RT3)
1	11.4118.033.010	REAR SHOCK AIR CAN ASSEMBLY - 184X44 (INCLUDES SEALS, 15W50 & DYNAMIC SEAL GREASE) - MONARCH B1 (PLUS, RL, XX), C1(R,RT,RT3) D1(RT3)
1	11.4118.033.011	REAR SHOCK AIR CAN ASSEMBLY - 190X51/200X51 (INCLUDES SEALS, 15W50 & DYNAMIC SEAL GREASE) - MONARCH B1 (PLUS, RL, XX), C1(R,RT,RT3) D1(RT3)
1	11.4118.033.012	REAR SHOCK AIR CAN ASSEMBLY - 200X57 (INCLUDES SEALS, 15W50 & DYNAMIC SEAL GREASE) - MONARCH B1 (PLUS, RL, XX), C1(R,RT,RT3) D1(RT3)
1	11.4118.033.013	REAR SHOCK AIR CAN ASSEMBLY - 216X63 (INCLUDES SEALS, 15W50 & DYNAMIC SEAL GREASE) - MONARCH B1 (PLUS, RL, XX), C1(R,RT,RT3) D1(RT3)
2	11.4118.033.014	REAR SHOCK AIR CAN ASSEMBLY - HIGH VOLUME 165X38 (INCLUDES SEALS, 15W50 & DYNAMIC SEAL GREASE) - MONARCH B1(PLUS, RL, XX), C1(R,RT,RT3)
2	11.4118.033.015	REAR SHOCK AIR CAN ASSEMBLY - HIGH VOLUME 190X51/200X51 (INCLUDES SEALS, 15W50 & DYNAMIC SEAL GREASE) - MONARCH B1(PLUS, RL, XX), C1(R,RT,RT3)
2	11.4118.033.016	REAR SHOCK AIR CAN ASSEMBLY - HIGH VOLUME 200X57 (INCLUDES SEALS, 15W50 & DYNAMIC SEAL GREASE) - MONARCH B1(PLUS, RL, XX), C1(R,RT,RT3)
2	11.4118.033.017	REAR SHOCK AIR CAN ASSEMBLY - HIGH VOLUME 216X63 (INCLUDES SEALS, 15W50 & DYNAMIC SEAL GREASE) - MONARCH B1(PLUS, RL, XX), C1(R,RT,RT3)
3	11.4118.033.028	REAR SHOCK AIR CAN ASSEMBLY - DEBONAIR 165X38 (INCLUDES DECALS, SEALS, 15W50 & DYNAMIC SEAL GREASE) - MONARCH B1(PLUS, RL, XX), C1(R,RT,RT3) D1(RT3)
3	11.4118.033.029	REAR SHOCK AIR CAN ASSEMBLY - DEBONAIR 184X44 (INCLUDES DECALS, SEALS, 15W50 & DYNAMIC SEAL GREASE) - MONARCH B1(PLUS, RL, XX), C1(R,RT,RT3) D1(RT3)
3	11.4118.033.030	REAR SHOCK AIR CAN ASSEMBLY - DEBONAIR 190X51/200X51 (INCLUDES DECALS, SEALS, 15W50 & DYNAMIC SEAL GREASE) - MONARCH B1(PLUS, RL, XX), C1(R,RT,RT3) D1(RT3)
3	11.4118.033.031	REAR SHOCK AIR CAN ASSEMBLY - DEBONAIR 200X57 (INCLUDES DECALS, SEALS, 15W50 & DYNAMIC SEAL GREASE) - MONARCH B1(PLUS, RL, XX), C1(R,RT,RT3) D1(RT3)
3	11.4118.033.032	REAR SHOCK AIR CAN ASSEMBLY - DEBONAIR 216X63 (INCLUDES DECALS, SEALS, 15W50 & DYNAMIC SEAL GREASE) - MONARCH B1(PLUS, RL, XX), C1(R,RT,RT3) D1(RT3)
	DAMPER	
4	11.4118.037.014	REAR SHOCK DAMPER BODY/IFP - FAST BLACK, 165X38 -MONARCH 2014+
4	11.4118.037.015	REAR SHOCK DAMPER BODY/IFP - FAST BLACK, 184X44 -MONARCH 2014+
4	11.4118.037.016	REAR SHOCK DAMPER BODY/IFP - FAST BLACK, 190X51 -MONARCH 2014+
4	11.4118.037.017	REAR SHOCK DAMPER BODY/IFP - FAST BLACK, 200X51 -MONARCH 2014+
4	11.4118.037.018	REAR SHOCK DAMPER BODY/IFP - FAST BLACK, 200X57 -MONARCH 2014+
4	11.4118.037.020	REAR SHOCK DAMPER BODY/IFP - FAST BLACK, 216X63 -MONARCH 2014+
ns	11.4118.037.024	REAR SHOCK DAMPER BODY/IFP - FAST BLACK, 210X60 -MONARCH RT 2014-2015 TREK
ns	11.4118.037.025	REAR SHOCK DAMPER BODY/IFP - FAST BLACK, 210X60 -MONARCH PLUS 2014-2015 TREK SLASH 27.5 (2012-2014)
ns	11.4118.037.026	REAR SHOCK DAMPER BODY/IFP - FAST BLACK, 195X46 -MONARCH 2014-2015 STUMPJUMPER EVO 29 (2012-2014)
ns	11.4118.037.027	REAR SHOCK DAMPER BODY/IFP - FAST BLACK, 195X51 -MONARCH 2014-2015 STUMPJUMPER EVO 26 (2012-2014)
ns	11.4118.037.030	REAR SHOCK DAMPER BODY/IFP - FAST BLACK, 216X57 -MONARCH 2014-2015 ENDURO 29 (2013-2014)
ns	11.4118.037.031	REAR SHOCK DAMPER BODY/IFP - FAST BLACK, 216X63 -MONARCH 2014-2015 ENDURO 26 (2013-2014)
ns	11.4118.037.012	REAR SHOCK DAMPER BODY/IFP - MONARCH TREK TRUNNION 184X51, B1
ns	11.4118.037.013	REAR SHOCK DAMPER BODY/IFP - FAST BLACK, 152X31 -MONARCH 2014+
ns	11.4118.037.019	REAR SHOCK DAMPER BODY/IFP - FAST BLACK, 203X57 -MONARCH 2014+
	TUNE	
5	11.4118.023.052	REAR SHOCK TUNE ASSEMBLY - MONARCH PLUS REB-LOW/COMP-LOW (CF-80LBS), LF-320,B1
5	11.4118.023.056	REAR SHOCK TUNE ASSEMBLY - MONARCH PLUS REB-MID/COMP-LOW (CF-80LBS), LF-320,B1
5	11.4118.023.057	REAR SHOCK TUNE ASSEMBLY - MONARCH PLUS REB-MID/COMP-MID (CF-97LBS), LF-320,B1
5	11.4118.023.058	REAR SHOCK TUNE ASSEMBLY - MONARCH PLUS REB-MID/COMP-HIGH (CF-110LBS), LF-320, B1
5	11.4118.023.060	REAR SHOCK TUNE ASSEMBLY - MONARCH PLUS REB-HIGH/COMP MID (CF-97LBS), LF-320, B1
5	11.4118.023.061	REAR SHOCK TUNE ASSEMBLY - MONARCH PLUS REB-HIGH/COMP HIGH (CF-110LBS), LF-320, B1
	SPARES	
6	11.4118.013.000	REAR SHOCK AIR PISTON SEALHEAD - MONARCH B1(PLUS, RL, XX), C1(R,RT,RT3), D1(RT3)
7	11.4115.117.020	REAR SHOCK REBOUND KNOB KIT - (INCLUDES REBOUND KNOB ASSEMBLY) - MONARCH PLUS B1
8	11.4115.119.020	REAR SHOCK COMPRESSION KNOB KIT - MONARCH PLUS B1
9	11.4115.121.010	REAR SHOCK RESERVOIR - 60.5MM MONARCH PLUS A1/B1
10	11.4115.122.010	REAR SHOCK INTERNAL FLOATING PISTON - RESERVOIR (INCLUDES O-RING) - MONARCH PLUS A1/BA
11	11.4115.124.010	REAR SHOCK AIR VALVE KIT - (INCLUDES VALVE BODY, VALVE, VALVE CAP) - MONARCH/MONARCH PLUS
12	11.4308.327.002	AIR VALVE KIT - SCHRADER CORE (QTY 2) - FORKS/SHOCKS/REVERB
13	11.4115.013.000	REAR SHOCK EYELET BUSHING KIT -1/2"X1/2" (QTY 2)
14	11.4118.042.000	REAR SHOCK VOLUME REDUCER KIT - BOTTOMLESS RINGS - (INCLUDES VOLUME ADJUST RINGS, QTY 9) -MONARCH/VIVID AIR
ns	11.4318.003.452	REAR SHOCK DECAL KIT - MONARCH PLUS RC3/RC3 DEBONAIR WHITE/BLACK 190/200/216/222
	TOOLS/GREASE/FLUIDS	
ns	11.4115.094.010	LUBRICANT, REAR SHOCK AIR CAN, MAXIMA 15W 50, 1 LITER BOTTLE
ns	00.4318.008.002	GREASE ROCKSHOX DYNAMIC SEAL GREASE (PTFE) 1OZ - RECOMMENDED FOR SERVICING REAR SHOCKS & FORKS
ns	00.4318.008.004	GREASE ROCKSHOX DYNAMIC SEAL GREASE 500ML - RECOMMENDED FOR SERVICING REAR SHOCKS & FORKS
ns	11.4115.094.030	MAXIMA SUSPENSION OIL PLUSH, 3WT 1 LITER BOTTLE - REAR SHOCK/CHARGER DAMPER
15	00.4315.027.010	REAR SHOCK AIR VALVE ADAPTER TOOL - REAR SHOCKS
16	00.4115.154.020	REAR SHOCK VISE BLOCKS, 3 HOLE FOR ROCKSHOX MONARCH/VIVID/VIVID AIR/REVERB
17	00.4118.013.000	REAR SHOCK BODY VISE BLOCKS, ROCKSHOX MONARCH
18	00.4315.026.010	REAR SHOCK 1/2"X1/2" BUSHING TOOL (EYELET/SEALHEAD) ROCKSHOX
ns	00.4315.023.010	HIGH-PRESSURE FORK/SHOCK PUMP (300 PSI MAX) ROCKSHOX
ns	00.4315.023.030	HIGH-PRESSURE FORK/SHOCK PUMP (600 PSI MAX) ROCKSHOX
ns	00.4315.023.040	HIGH-PRESSURE FORK/SHOCK PUMP (300 PSI MAX) ROCKSHOX DIGITALGAUGE
ns	00.4315.022.010	REAR SHOCK SCHRADER VALVE REMOVAL TOOL ROCKSHOX

MONARCH PLUS A1-A2 (2011-2013)

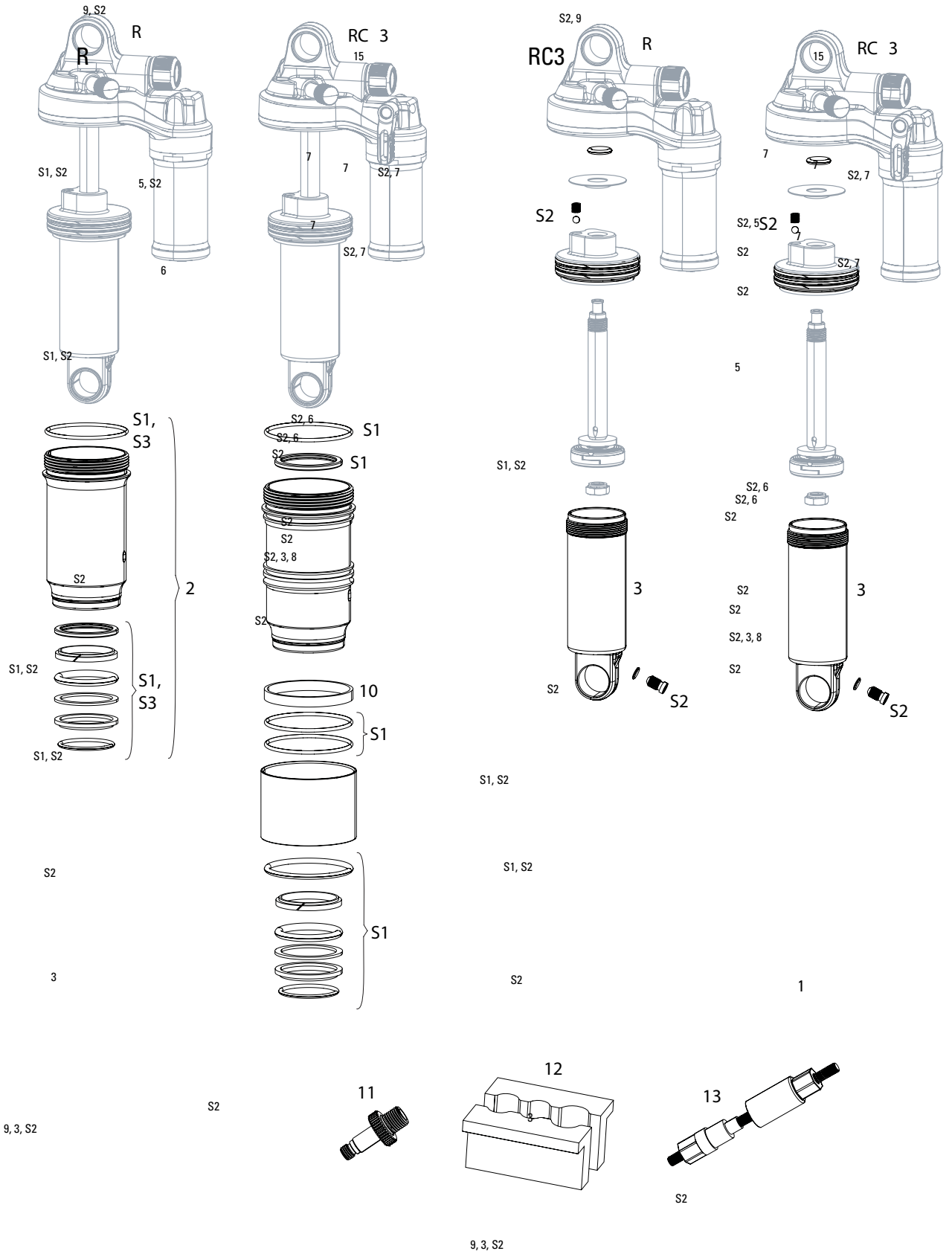

Note:

1. All 2011-2013 Monarch Plus shocks are compatible with 2011-2013 standard and high-volume air can assemblies; air can includes all seals installed.
2 Use '1/2"x1/2" Rear Shock Bushing/Mount Hardware Tool' to remove and install eyelet bushing and mounting hardware.

MONARCH PLUS A1-A2 (2011-2013)

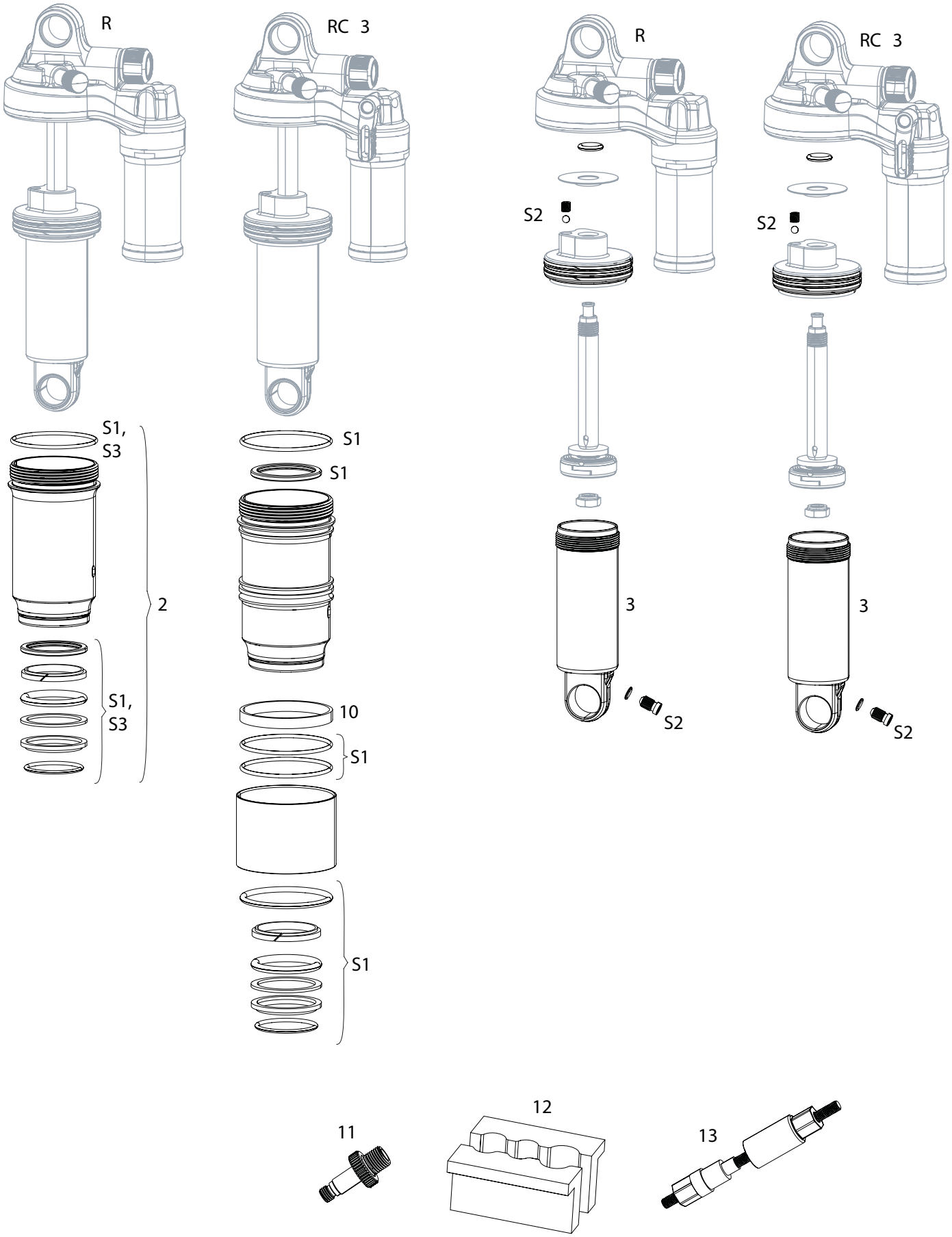

MONARCH PLUS A1-A2 (2011-2013)

	UPGRADE	
1	00.4018.783.004	AIR CAN UPGRADE KIT - DEBONAIR 165X38 (INCLUDES AIR CAN, VOLUME SPACERS, SEALS & DECALS) - B1 & LATER (MONARCH 2014+/RT32013+)
1	00.4018.783.005	AIR CAN UPGRADE KIT - DEBONAIR 184X44 (INCLUDES AIR CAN, VOLUME SPACERS, SEALS & DECALS) - B1 & LATER (MONARCH 2014+/RT32013+)
1	00.4018.783.006	AIR CAN UPGRADE KIT - DEBONAIR 190/200X51 (INCLUDES AIR CAN,VOLUME SPACERS, SEALS & DECALS) - B1 & LATER (MONARCH 2014+/RT3 2013+)
1	00.4018.783.007	AIR CAN UPGRADE KIT - DEBONAIR 200X57 (INCLUDES AIR CAN, VOLUME SPACERS, SEALS & DECALS) - B1 & LATER (MONARCH 2014+/RT32013+)
1	00.4018.783.008	AIR CAN UPGRADE KIT - DEBONAIR 216X63 (INCLUDES AIR CAN, VOLUME SPACERS, SEALS & DECALS) - B1 & LATER (MONARCH 2014+/RT32013+)
	SERVICE	
S1	00.4315.032.250	AM REAR SHOCK AIR CAN HIGH VOLUME SERVICE KIT, BASIC - (INCLUDES SEAL GREASE/OIL) - MONARCH/MONARCH PLUS (2012)
S2	11.4115.129.010	REAR SHOCK SERVICE KIT - (DOES NOT INCLUDED AIR CAN SEALS) - MONARCH PLUS
S3	00.4315.032.240	AM REAR SHOCK AIR CAN SERVICE KIT, BASIC - (INCLUDES SEAL GREASE/OIL) - MONARCH/MONARCH PLUS (2012)
	AIR CAN	
2	11.4115.106.020	REAR SHOCK AIR CAN - 165X38 - MONARCH/PLUS RC3/RT/R(2011-2013) MONARCH RT3 (2011-2012)
	DAMPER	
3	11.4115.112.060	REAR SHOCK DAMPER BODY/IFP - MONARCH RT3/RL/RT/R200X57
3	11.4115.112.080	REAR SHOCK DAMPER BODY/IFP - MONARCH RT3/RL/RT/R216X63
3	11.4115.112.090	REAR SHOCK DAMPER BODY/IFP - MONARCH RT3/RL/RT/R222X66
	SPARES	
4	11.4115.119.010	REAR SHOCK COMPRESSION KNOB KIT - MONARCH PLUS
5	11.4115.121.010	REAR SHOCK RESERVOIR - 60.5MM MONARCH PLUS A1/B1
6	11.4115.122.010	REAR SHOCK INTERNAL FLOATING PISTON - RESERVOIR (INCLUDES O-RING) - MONARCH PLUS A1/BA
7	11.4115.124.010	REAR SHOCK AIR VALVE KIT - (INCLUDES VALVE BODY, VALVE, VALVE CAP) - MONARCH/MONARCH PLUS
8	11.4308.327.002	AIR VALVE KIT - SCHRADER CORE (QTY 2) - FORKS/SHOCKS/REVERB
9	11.4115.013.000	REAR SHOCK EYELET BUSHING KIT -1/2"X1/2" (QTY 2)
10	11.4118.042.000	REAR SHOCK VOLUME REDUCER KIT - BOTTOMLESS RINGS - (INCLUDES VOLUME ADJUST RINGS, QTY 9) -MONARCH/VIVID AIR
15	11.4115.117.020	REAR SHOCK REBOUND KNOB KIT - (INCLUDES REBOUND KNOB ASSEMBLY) - MONARCH PLUS B1
	TOOLS/GREASE/FLUIDS	
ns	11.4115.094.010	LUBRICANT, REAR SHOCK AIR CAN, MAXIMA 15W 50, 1 LITER BOTTLE
ns	11.4115.094.030	MAXIMA SUSPENSION OIL PLUSH, 3WT 1 LITER BOTTLE - REAR SHOCK/CHARGER DAMPER
11	00.4315.027.010	REAR SHOCK AIR VALVE ADAPTER TOOL - REAR SHOCKS
12	00.4115.154.020	REAR SHOCK VISE BLOCKS, 3 HOLE FOR ROCKSHOX MONARCH/VIVID/VIVID AIR/REVERB
13	00.4315.026.010	REAR SHOCK 1/2"X1/2" BUSHING TOOL (EYELET/SEALHEAD) ROCKSHOX
ns	00.4315.023.010	HIGH-PRESSURE FORK/SHOCK PUMP (300 PSI MAX) ROCKSHOX
ns	00.4315.023.030	HIGH-PRESSURE FORK/SHOCK PUMP (600 PSI MAX) ROCKSHOX
ns	00.4315.023.040	HIGH-PRESSURE FORK/SHOCK PUMP (300 PSI MAX) ROCKSHOX DIGITALGAUGE
ns	00.4315.022.010	REAR SHOCK SCHRADER VALVE REMOVAL TOOL ROCKSHOX
14	00.4118.013.000	REAR SHOCK BODY VISE BLOCKS, ROCKSHOX MONARCH
ns	00.4318.008.002	GREASE ROCKSHOX DYNAMIC SEAL GREASE (PTFE) 1OZ - RECOMMENDED FOR SERVICING REAR SHOCKS & FORKS
ns	00.4318.008.004	GREASE ROCKSHOX DYNAMIC SEAL GREASE 500ML - RECOMMENDED FOR SERVICING REAR SHOCKS & FORKS

KAGE A1-A3 (2012-2018)

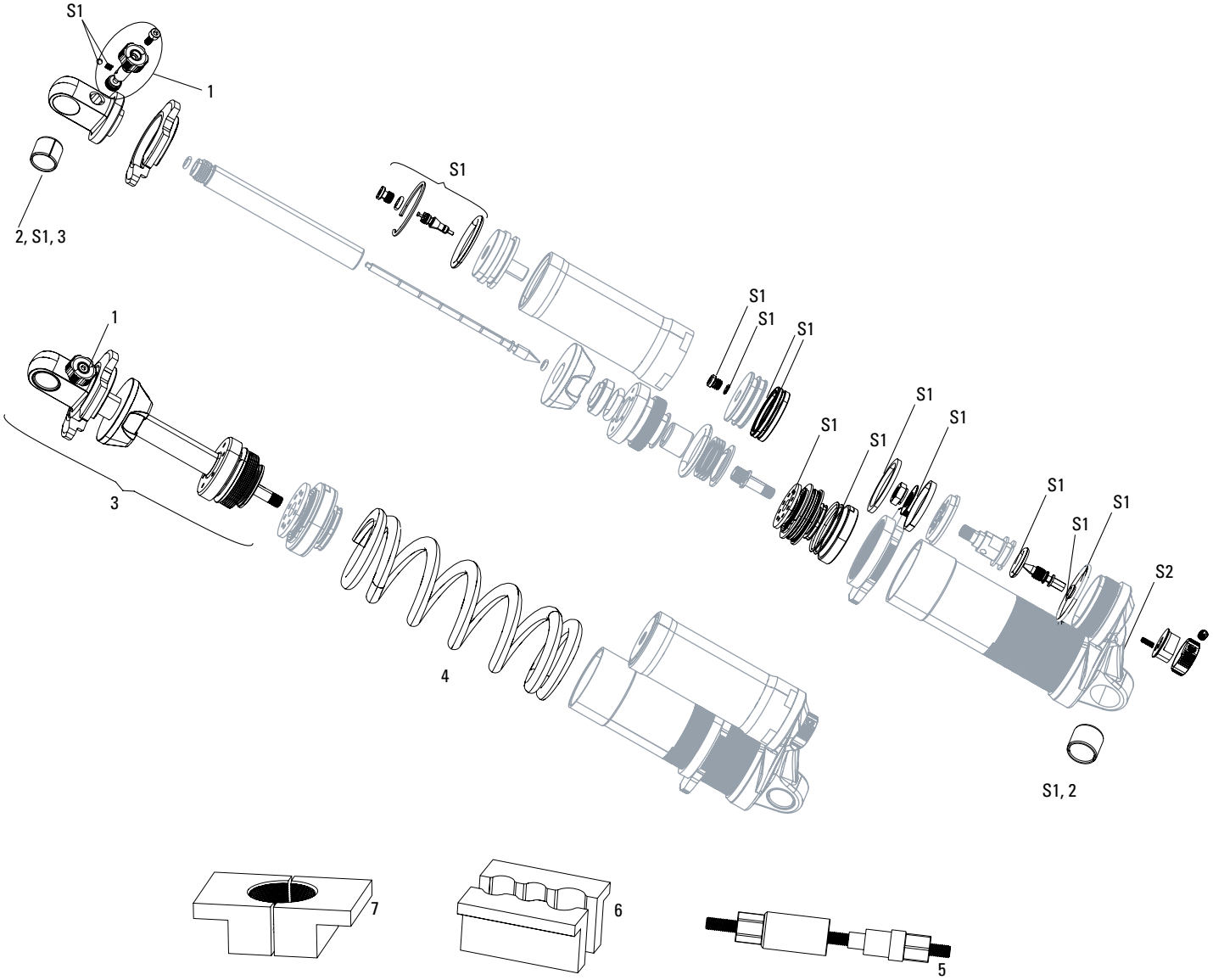

Note:

1. Not all service parts may be visible in exploded views. Kage Service Kit includes all o-rings, seals, glide rings, ball bearings, and detent springs.
2. Eyelet/Shaft/Sealhead assembly (item 1) does not include spring retainer.
3. Pre-2013 - If shaft / needle o-rings need to be replaced/serviced, must update to new improved Eyelet/Shaft/Sealhead assembly.
4. Kage rear shocks produced after 1 January 2013: If shaft / needle o-rings need to be replaced/serviced, must replace entire Eyelet/Shaft/Sealhead assembly.
5. Kage rear shocks produced after 1 January 2013: Feature a green sealhead scraper that is not compatible with Kage shocks produced before 1 January 2013.
6. Vivid spring is compatible with Kage. Vivid spring collar/retainer is not compatible with Kage.
7. Use 1/2"x1/2" Rear Shock Bushing/Mount Hardware Tool' to remove and install eyelet bushing and mounting hardware.

	SERVICE	
S1	11.4118.018.000	REAR SHOCK SERVICE KIT - GREEN SEALHEAD SCRAPER - KAGE (PRODUCED AFTER JAN 1ST 2013)
	SPARES	
1	11.4115.085.010	REAR SHOCK REBOUND KNOB KIT - 2011 VIVID/VIVID AIR/KAGE (NOTCOMPATIBLE 2009-2010)
2	11.4115.013.000	REAR SHOCK EYELET BUSHING KIT -1/2"X1/2" (QTY 2)
3	11.4118.016.010	REAR SHOCK EYELET/SHAFT/SEALHEAD ASSEMBLY - 90 DEGREE REBOUND, 240X76 MEDIUM - KAGE RC (A1-A3/2012-2016)

KAGE A1-A3 (2012-2018)

	SERVICE	
S1	11.4118.018.000	REAR SHOCK SERVICE KIT - GREEN SEALHEAD SCRAPER - KAGE (PRODUCED AFTER JAN 1ST 2013)
	SPARES	
1	11.4115.085.010	REAR SHOCK REBOUND KNOB KIT - 2011 VIVID/VIVID AIR/KAGE (NOT COMPATIBLE 2009-2010)
2	11.4115.013.000	REAR SHOCK EYELET BUSHING KIT -1/2"X1/2" (QTY 2)
3	11.4118.016.010	REAR SHOCK EYELET/SHAFT/SEALHEAD ASSEMBLY - 90 DEGREE REBOUND, 240X76 MEDIUM - KAGE RC (A1-A3/2012-2016)
	SERVICE	
S1	11.4118.018.000	REAR SHOCK SERVICE KIT - GREEN SEALHEAD SCRAPER - KAGE (PRODUCED AFTER JAN 1ST 2013)
	SPARES	
1	11.4115.085.010	REAR SHOCK REBOUND KNOB KIT - 2011 VIVID/VIVID AIR/KAGE (NOT COMPATIBLE 2009-2010)
2	11.4115.013.000	REAR SHOCK EYELET BUSHING KIT -1/2"X1/2" (QTY 2)
3	11.4118.016.010	REAR SHOCK EYELET/SHAFT/SEALHEAD ASSEMBLY - 90 DEGREE REBOUND, 240X76 MEDIUM - KAGE RC (A1-A3/2012-2016)
	COIL SPRING	
4	00.4118.026.000	SPRING GREY VIVID/KAGE 300LB 200X51/57
4	00.4118.026.001	SPRING GREY VIVID/KAGE 350LB 200X51/57
4	00.4118.026.002	SPRING GREY VIVID/KAGE 400LB 200X51/57
4	00.4118.026.003	SPRING GREY VIVID/KAGE 450LB 200X51/57
4	00.4118.026.004	SPRING GREY VIVID/KAGE 500LB 200X51/57
4	00.4118.026.005	SPRING GREY VIVID/KAGE 550LB 200X51/57
4	00.4118.026.006	SPRING GREY VIVID/KAGE 600LB 200X51/57
4	00.4118.026.007	SPRING GREY VIVID/KAGE 650LB 200X51/57
4	00.4118.026.008	SPRING GREY VIVID/KAGE 250LB 216/222X70
4	00.4118.026.009	SPRING GREY VIVID/KAGE 300LB 216/222X70
4	00.4118.026.010	SPRING GREY VIVID/KAGE 350LB 216/222X70
4	00.4118.026.011	SPRING GREY VIVID/KAGE 400LB 216/222X70
4	00.4118.026.012	SPRING GREY VIVID/KAGE 450LB 216/222X70
4	00.4118.026.013	SPRING GREY VIVID/KAGE 500LB 216/222X70
4	00.4118.026.014	SPRING GREY VIVID/KAGE 550LB 216/222X70
4	00.4118.026.015	SPRING GREY VIVID/KAGE 600LB 216/222X70
4	00.4118.026.016	SPRING GREY VIVID/KAGE 650LB 216/222X70
4	00.4118.026.017	SPRING GREY VIVID/KAGE 200LB 240X76
4	00.4118.026.018	SPRING GREY VIVID/KAGE 250LB 240X76
4	00.4118.026.019	SPRING GREY VIVID/KAGE 300LB 240X76
4	00.4118.026.020	SPRING GREY VIVID/KAGE 350LB 240X76
4	00.4118.026.021	SPRING GREY VIVID/KAGE 400LB 240X76
4	00.4118.026.022	SPRING GREY VIVID/KAGE 450LB 240X76
4	00.4118.026.023	SPRING GREY VIVID/KAGE 500LB 240X76
4	00.4118.026.024	SPRING GREY VIVID/KAGE 550LB 240X76
4	00.4118.026.025	SPRING GREY VIVID/KAGE 600LB 240X76
4	00.4118.026.026	SPRING GREY VIVID/KAGE 200LB 267X89
4	00.4118.026.027	SPRING GREY VIVID/KAGE 250LB 267X89
4	00.4118.026.028	SPRING GREY VIVID/KAGE 300LB 267X89
4	00.4118.026.029	SPRING GREY VIVID/KAGE 350LB 267X89
4	00.4118.026.030	SPRING GREY VIVID/KAGE 400LB 267X89
4	00.4118.026.031	SPRING GREY VIVID/KAGE 450LB 267X89
4	00.4118.026.032	SPRING GREY VIVID/KAGE 500LB 267X89
4	00.4118.026.033	SPRING GREY VIVID/KAGE 550LB 267X89
	TOOLS/GREASE/FLUIDS	
5	00.4315.026.010	REAR SHOCK 1/2"X1/2" BUSHING TOOL (EYELET/SEALHEAD) ROCKSHOX
6	00.4115.154.020	REAR SHOCK VISE BLOCKS, 3 HOLE FOR ROCKSHOX MONARCH/VIVID/VIVID AIR/REVERB
7	00.4115.185.000	REAR SHOCK BODY VISE BLOCKS, (FOR SHOCK SERVICE) - KAGE/VIVID
ns	11.4115.094.030	MAXIMA SUSPENSION OIL PLUSH, 3WT 1 LITER BOTTLE - REAR SHOCK/CHARGER DAMPER
ns	00.4315.014.010	GREASE, PM600 MILITARY GREASE 14OZ (FOR ORING SEALS)

VIVID COIL B1-B3 (2014-2020)

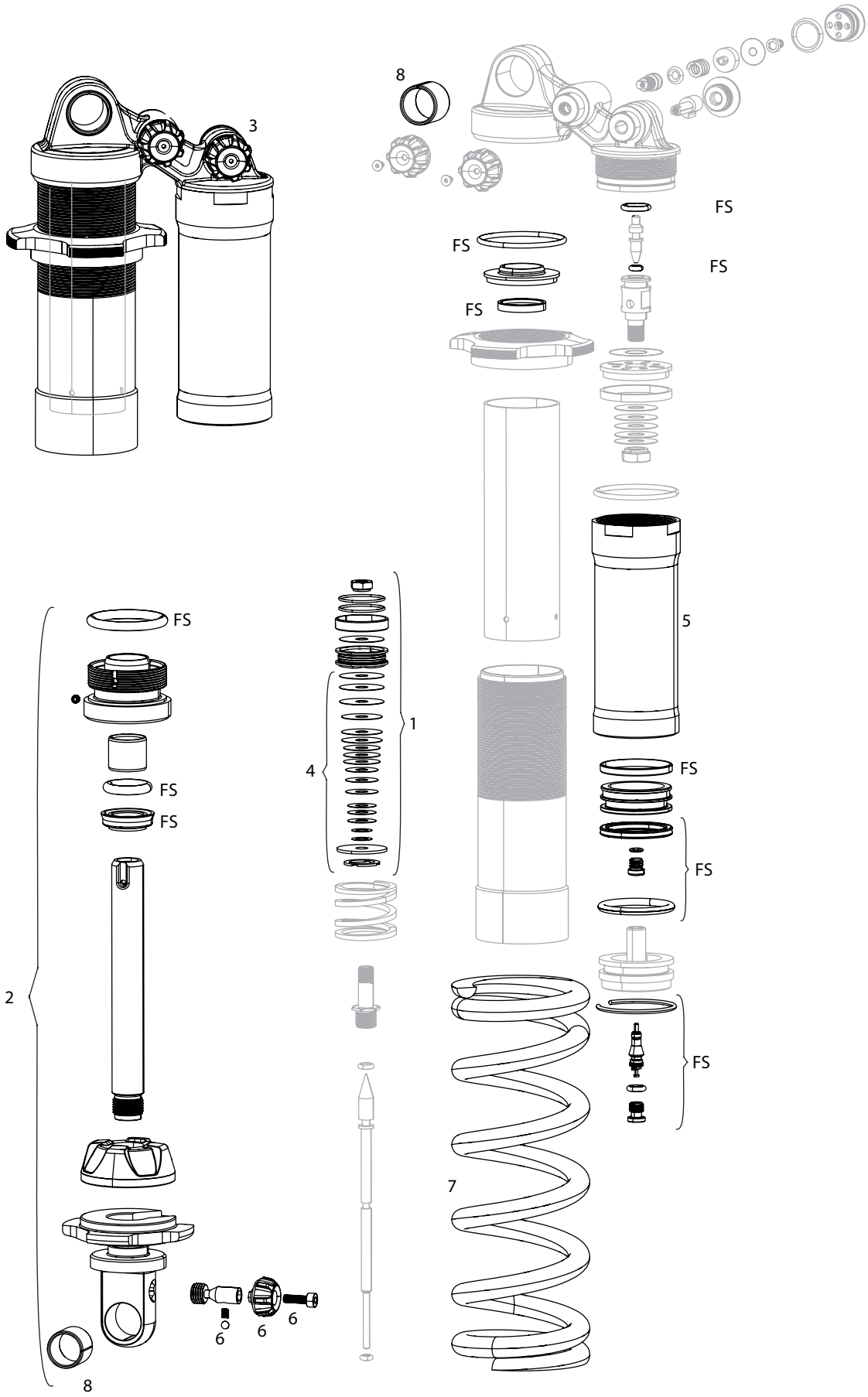

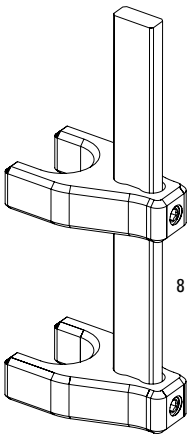

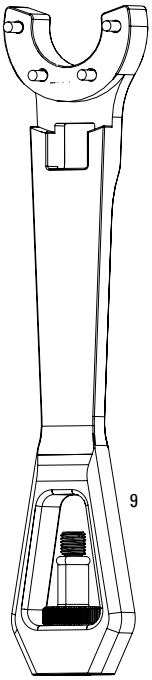

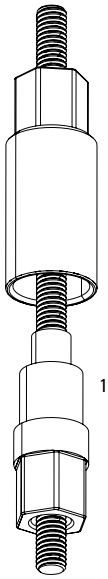

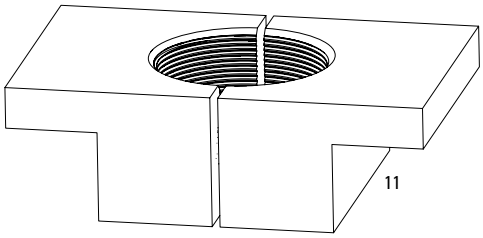

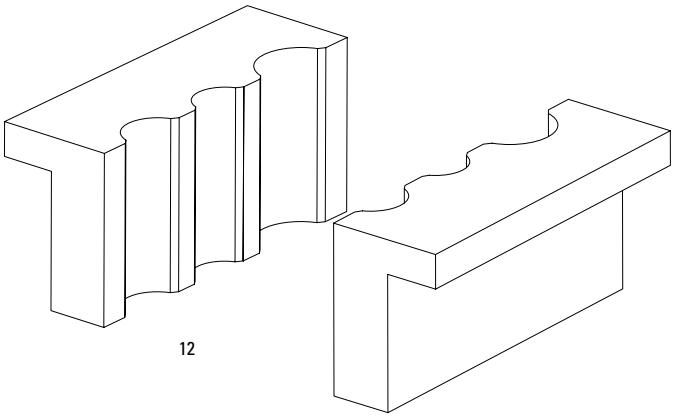

Note:
1. Not all service parts may be visible in exploded views. Vivid Service Kit includes all o-rings, seals, glide rings, ball bearings, and detent springs.
2. Eyelet/Shaft/Sealhead assembly (item 1) does not include spring retainer.
3. Use '1/2"x1/2" Rear Shock Bushing/Mount Hardware Tool' to remove and install eyelet bushing and mounting hardware.

VIVID COIL B1-B3 (2014-2020)

	SERVICE	
FS	11.4118.032.000	REAR SHOCK SERVICE KIT - FULL SERVICE (REQUIRES COUNTER MEASURE TOOL) - VIVID B1-B3 (2014-2019)
	TUNE	
1	11.4118.023.063	REAR SHOCK TUNE ASSEMBLY - LOW, VIVID/VIVID AIR R2C B1 NEW
1	11.4118.023.064	REAR SHOCK TUNE ASSEMBLY - MID, VIVID/VIVID AIR R2C B1 NEW
1	11.4118.023.065	REAR SHOCK TUNE ASSEMBLY - HIGH, VIVID/VIVID AIR R2CB1 NEW
	SPARES	
2	11.4118.021.010	REAR SHOCK EYELET/SHAFT/SEALHEAD ASSEMBLY - 90 DEGREE REBOUND, 240X76 MEDIUM -VIVID R2C (B1-B3/2014-2016)
3	11.4118.022.004	REAR SHOCK DAMPER BODY/RESERVOIR ASSY - 267X89 (ASSEMBLED) VIVID R2C B1
4	11.4118.024.002	REAR SHOCK TUNE ASSEMBLY - HIGH, VIVID/VIVID AIR R2C B1
5	11.4118.026.000	REAR SHOCK RESERVOIR - 200/216 VIVID/VIVID AIR B1
5	11.4118.026.001	REAR SHOCK RESERVOIR - 222/240 VIVID/VIVID AIR B1
6	11.4118.028.001	REAR SHOCK REBOUND KNOB KIT - (INCLUDES LEVER & BOLT) - LOW SPEED VIVID/VIVID AIR B1
8	11.4115.013.000	REAR SHOCK EYELET BUSHING KIT -1/2"X1/2" (QTY 2)
	SPRING	
7	00.4118.026.000	SPRING GREY VIVID/KAGE 300LB 200X51/57
7	00.4118.026.001	SPRING GREY VIVID/KAGE 350LB 200X51/57
7	00.4118.026.002	SPRING GREY VIVID/KAGE 400LB 200X51/57
7	00.4118.026.003	SPRING GREY VIVID/KAGE 450LB 200X51/57
7	00.4118.026.004	SPRING GREY VIVID/KAGE 500LB 200X51/57
7	00.4118.026.005	SPRING GREY VIVID/KAGE 550LB 200X51/57
7	00.4118.026.006	SPRING GREY VIVID/KAGE 600LB 200X51/57
7	00.4118.026.007	SPRING GREY VIVID/KAGE 650LB 200X51/57
7	00.4118.026.008	SPRING GREY VIVID/KAGE 250LB 216/222X70
7	00.4118.026.009	SPRING GREY VIVID/KAGE 300LB 216/222X70
7	00.4118.026.010	SPRING GREY VIVID/KAGE 350LB 216/222X70
7	00.4118.026.011	SPRING GREY VIVID/KAGE 400LB 216/222X70
7	00.4118.026.012	SPRING GREY VIVID/KAGE 450LB 216/222X70
7	00.4118.026.013	SPRING GREY VIVID/KAGE 500LB 216/222X70
7	00.4118.026.014	SPRING GREY VIVID/KAGE 550LB 216/222X70
7	00.4118.026.015	SPRING GREY VIVID/KAGE 600LB 216/222X70
7	00.4118.026.016	SPRING GREY VIVID/KAGE 650LB 216/222X70
7	00.4118.026.017	SPRING GREY VIVID/KAGE 200LB 240X76
7	00.4118.026.018	SPRING GREY VIVID/KAGE 250LB 240X76
7	00.4118.026.019	SPRING GREY VIVID/KAGE 300LB 240X76
7	00.4118.026.020	SPRING GREY VIVID/KAGE 350LB 240X76
7	00.4118.026.021	SPRING GREY VIVID/KAGE 400LB 240X76
7	00.4118.026.022	SPRING GREY VIVID/KAGE 450LB 240X76
7	00.4118.026.023	SPRING GREY VIVID/KAGE 500LB 240X76
7	00.4118.026.024	SPRING GREY VIVID/KAGE 550LB 240X76
7	00.4118.026.025	SPRING GREY VIVID/KAGE 600LB 240X76
7	00.4118.026.026	SPRING GREY VIVID/KAGE 200LB 267X89
7	00.4118.026.027	SPRING GREY VIVID/KAGE 250LB 267X89
7	00.4118.026.028	SPRING GREY VIVID/KAGE 300LB 267X89
7	00.4118.026.029	SPRING GREY VIVID/KAGE 350LB 267X89
7	00.4118.026.030	SPRING GREY VIVID/KAGE 400LB 267X89
7	00.4118.026.031	SPRING GREY VIVID/KAGE 450LB 267X89
7	00.4118.026.032	SPRING GREY VIVID/KAGE 500LB 267X89
7	00.4118.026.033	SPRING GREY VIVID/KAGE 550LB 267X89
7	00.4118.026.034	SPRING GREY VIVID KAGE 225LB 267X89
7	00.4118.026.035	SPRING GREY VIVID KAGE 275LB 267X89
7	00.4118.026.036	SPRING GREY VIVID KAGE 325LB 267X89
	TOOLS/GREASE/FLUIDS	
8	00.4118.045.001	REAR SHOCK SPRING COMPRESSOR TOOL, COUNTER MEASURE - ROCKSHOX VIVID/VIVID AIR
9	00.4315.028.010	REAR SHOCK SPANNER WRENCH/AIR VALVE TOOL - ROCKSHOX VIVID/VIVID AIR/SUPER DELUXE COIL
10	00.4315.026.010	REAR SHOCK 1/2"X1/2" BUSHING TOOL (EYELET/SEALHEAD) ROCKSHOX
11	00.4115.185.000	REAR SHOCK BODY VISE BLOCKS, (FOR SHOCK SERVICE) - KAGE/VIVID
12	00.4115.154.020	REAR SHOCK VISE BLOCKS, 3 HOLE FOR ROCKSHOX MONARCH/VIVID/VIVID AIR/REVERB
ns	11.4115.094.030	MAXIMA SUSPENSION OIL PLUSH, 3WT 1 LITER BOTTLE - REAR SHOCK/CHARGER DAMPER
ns	00.4315.014.010	GREASE, PM600 MILITARY GREASE 14OZ (FOR ORING SEALS)

VIVID COIL (2008-2013)

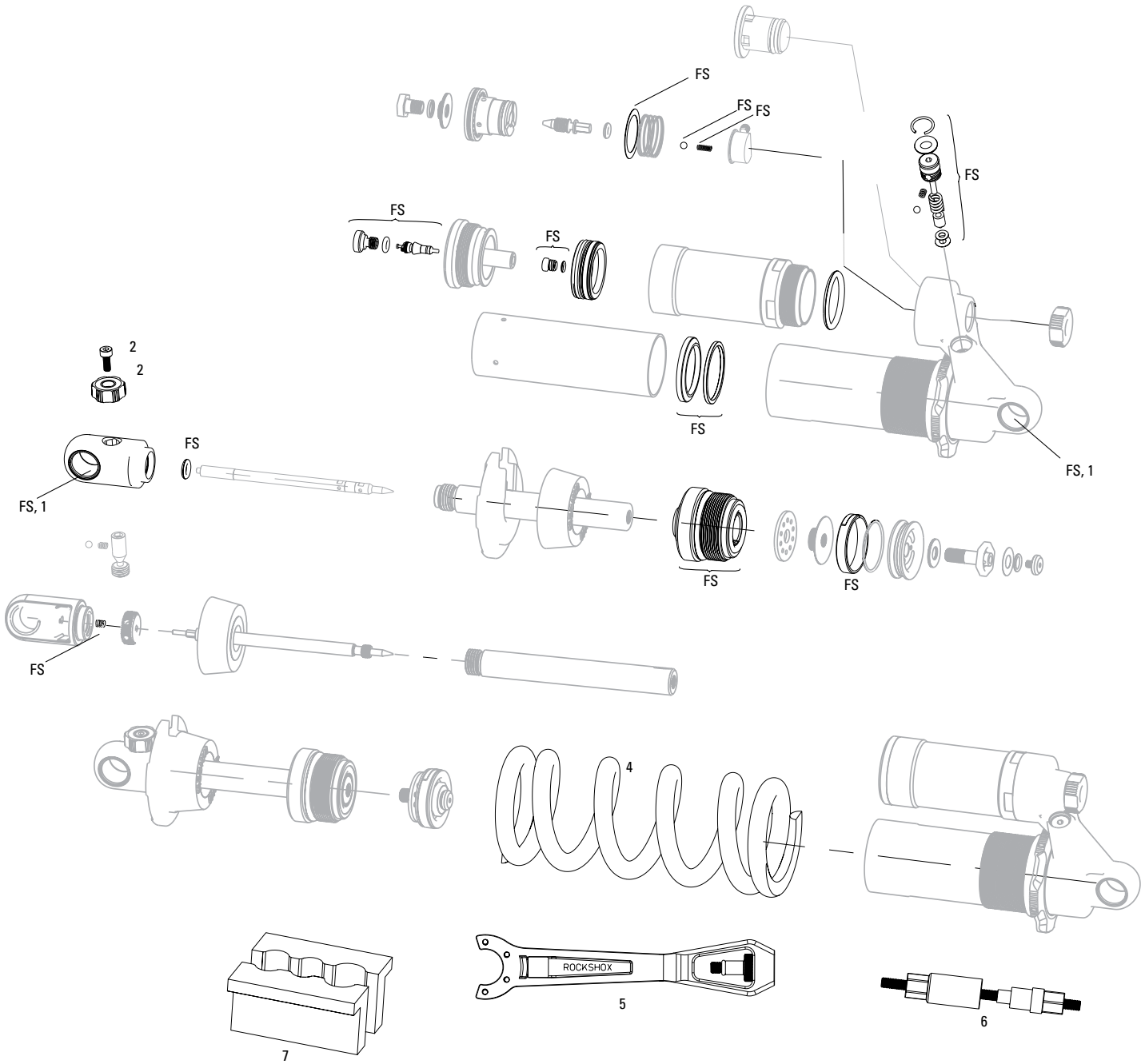

Spring / Collar/Retainer Guide		Shock Stroke					
		51mm	57mm	63mm	70mm	76mm	89mm
		2.0in	2.25in	2.5in	2.75in	3.0in	3.5in
Spring Weight	200lb	n/a		n/a		Aluminum	
	250lb						Aluminum
	300lb			Aluminum			
	350lb	Aluminum					
	400lb						
	450lb						
	500lb						Steel
	550lb			Steel		Steel	
	600lb	Steel					n/a
	650lb			n/a		n/a	

Note:

1. Not all service parts may be visible in exploded views. Vivid Service Kit includes all o-rings, seals, glide rings, ball bearings, and detent springs.
2. Please note all model year identification in kit descriptions for compatibility.
3. Use appropriate aluminum spring collar/retainer (item 18) with spring rates 250lb - 500 lb. Use appropriate Steel spring collar/retainer (item 18) with spring rates 550lb - 650lb. See chart for reference.
4. Please refer to the Spring / Collar / Retainer Guide for the correct spring collar/retainer.
5. Use '1/2"x1/2" Rear Shock Bushing/Mount Hardware Tool' to remove and install eyelet bushing and mounting hardware.
6. Full Service kits contain updated sealhead assembly.

VIVID COIL (2008-2013)

	SERVICE	
FS	11.4118.020.000	REAR SHOCK SERVICE KIT - FULL SERVICE (INCLUDES COMPLETE SEALHEAD ASSEMBLY) -VIVID (2009-2010)
FS	11.4118.020.001	REAR SHOCK SERVICE KIT - FULL SERVICE (INCLUDES COMPLETE SEALHEAD ASSEMBLY) -VIVID (2011-2012)
	SPARE	
1	11.4115.013.000	REAR SHOCK EYELET BUSHING KIT -1/2"X1/2" (QTY 2)
2	11.4115.085.010	REAR SHOCK REBOUND KNOB KIT - 2011 VIVID/VIVID AIR/KAGE (NOT COMPATIBLE 2009-2010)
	SPRING	
4	00.4118.026.000	SPRING GREY VIVID/KAGE 300LB 200X51/57
4	00.4118.026.001	SPRING GREY VIVID/KAGE 350LB 200X51/57
4	00.4118.026.002	SPRING GREY VIVID/KAGE 400LB 200X51/57
4	00.4118.026.003	SPRING GREY VIVID/KAGE 450LB 200X51/57
4	00.4118.026.004	SPRING GREY VIVID/KAGE 500LB 200X51/57
4	00.4118.026.005	SPRING GREY VIVID/KAGE 550LB 200X51/57
4	00.4118.026.006	SPRING GREY VIVID/KAGE 600LB 200X51/57
4	00.4118.026.007	SPRING GREY VIVID/KAGE 650LB 200X51/57
4	00.4118.026.008	SPRING GREY VIVID/KAGE 250LB 216/222X70
4	00.4118.026.009	SPRING GREY VIVID/KAGE 300LB 216/222X70
4	00.4118.026.010	SPRING GREY VIVID/KAGE 350LB 216/222X70
4	00.4118.026.011	SPRING GREY VIVID/KAGE 400LB 216/222X70
4	00.4118.026.012	SPRING GREY VIVID/KAGE 450LB 216/222X70
4	00.4118.026.013	SPRING GREY VIVID/KAGE 500LB 216/222X70
4	00.4118.026.014	SPRING GREY VIVID/KAGE 550LB 216/222X70
4	00.4118.026.015	SPRING GREY VIVID/KAGE 600LB 216/222X70
4	00.4118.026.016	SPRING GREY VIVID/KAGE 650LB 216/222X70
4	00.4118.026.017	SPRING GREY VIVID/KAGE 200LB 240X76
4	00.4118.026.018	SPRING GREY VIVID/KAGE 250LB 240X76
4	00.4118.026.019	SPRING GREY VIVID/KAGE 300LB 240X76
4	00.4118.026.020	SPRING GREY VIVID/KAGE 350LB 240X76
4	00.4118.026.021	SPRING GREY VIVID/KAGE 400LB 240X76
4	00.4118.026.022	SPRING GREY VIVID/KAGE 450LB 240X76
4	00.4118.026.023	SPRING GREY VIVID/KAGE 500LB 240X76
4	00.4118.026.024	SPRING GREY VIVID/KAGE 550LB 240X76
4	00.4118.026.025	SPRING GREY VIVID/KAGE 600LB 240X76
4	00.4118.026.026	SPRING GREY VIVID/KAGE 200LB 267X89
4	00.4118.026.027	SPRING GREY VIVID/KAGE 250LB 267X89
4	00.4118.026.028	SPRING GREY VIVID/KAGE 300LB 267X89
4	00.4118.026.029	SPRING GREY VIVID/KAGE 350LB 267X89
4	00.4118.026.030	SPRING GREY VIVID/KAGE 400LB 267X89
4	00.4118.026.031	SPRING GREY VIVID/KAGE 450LB 267X89
4	00.4118.026.032	SPRING GREY VIVID/KAGE 500LB 267X89
4	00.4118.026.033	SPRING GREY VIVID/KAGE 550LB 267X89
	TOOLS/GREASE/FLUIDS	
5	00.4315.028.010	REAR SHOCK SPANNER WRENCH/AIR VALVE TOOL - ROCKSHOX VIVID/VIVID AIR/SUPER DELUXE COIL
6	00.4315.026.010	REAR SHOCK 1/2"X1/2" BUSHING TOOL (EYELET/SEALHEAD) ROCKSHOX
7	00.4115.154.020	REAR SHOCK VISE BLOCKS, 3 HOLE FOR ROCKSHOX MONARCH/VIVID/VIVID AIR/REVERB
ns	11.4115.094.030	MAXIMA SUSPENSION OIL PLUSH, 3WT 1 LITER BOTTLE - REAR SHOCK/CHARGER DAMPER
ns	00.4315.014.010	GREASE, PM600 MILITARY GREASE 14OZ (FOR ORING SEALS)

VIVID AIR B1-B2 (2014-2020)

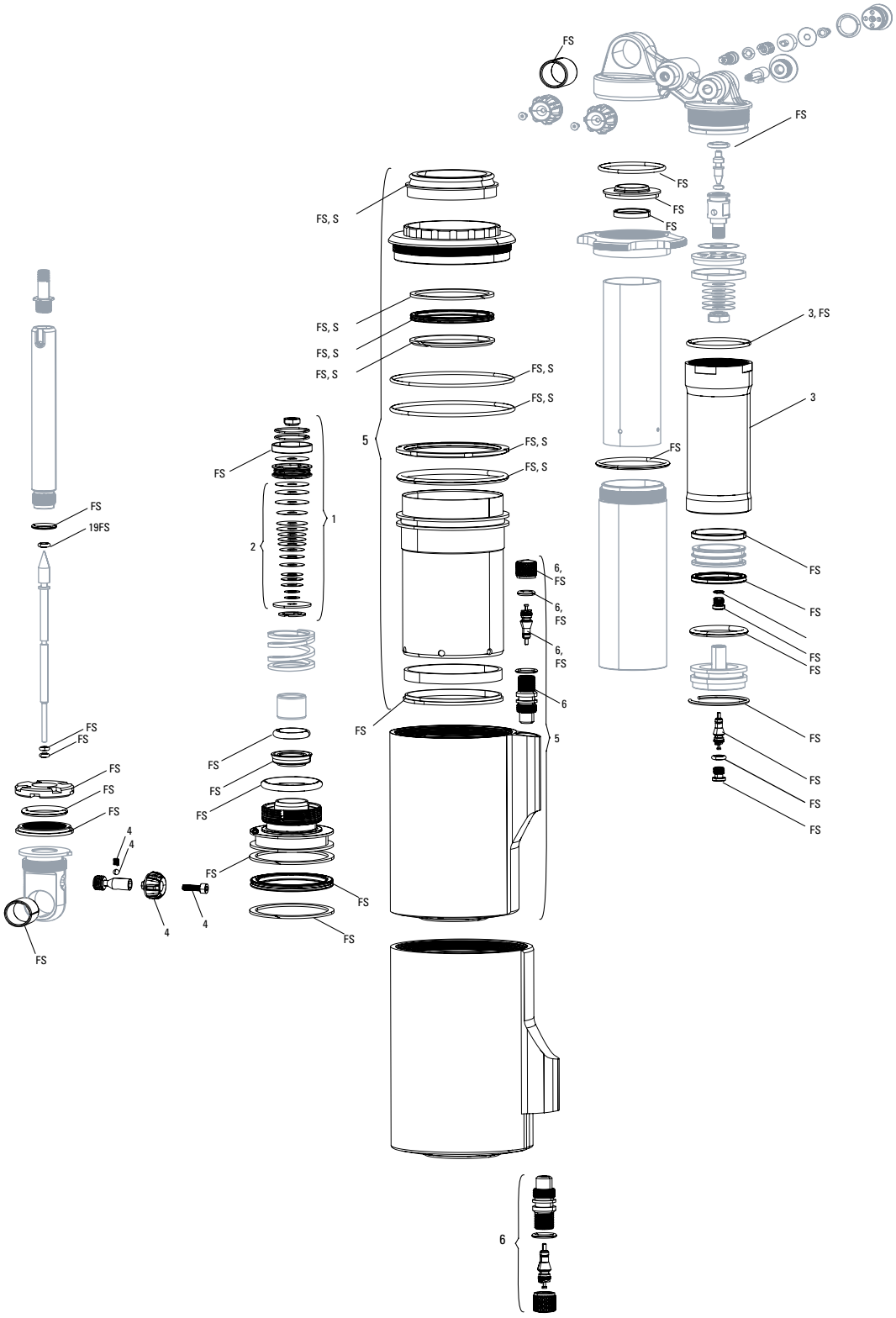

Note:
1. Vivid air can wrench is required for air can removal. Vivid 31mm wrench is required for reservoir removal.
2. Use '1/2"x1/2" Rear Shock Bushing/Mount Hardware Tool' to remove and install eyelet bushing and mounting hardware.
3. All Air Can assemblies are fully assembled.

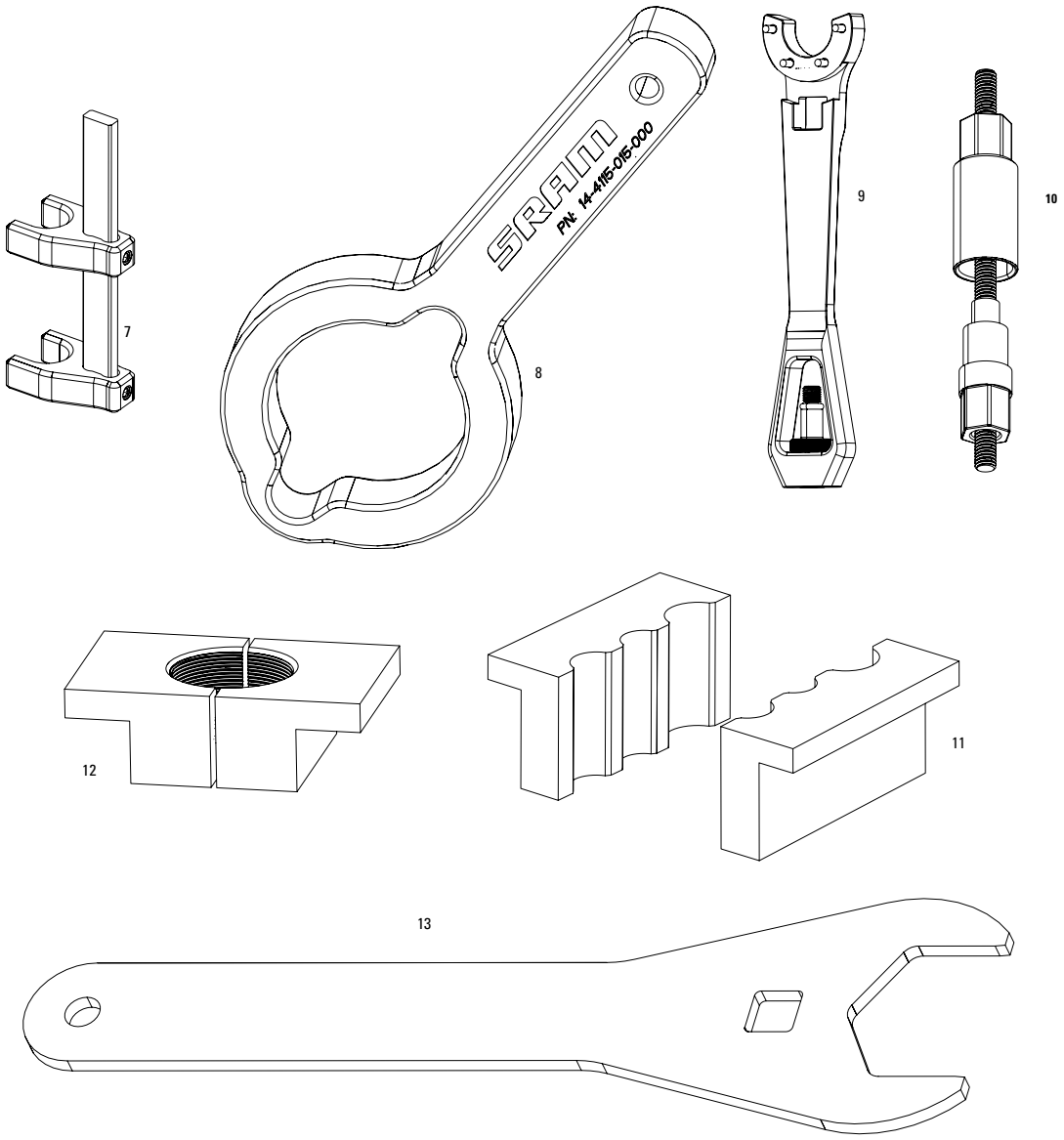
7
SRAM
PN: 14-4165-015-000
8
9
10
12
11
13

VIVID AIR B1-B2 (2014-2020)

	SERVICE	
FS	11.4118.032.001	REAR SHOCK SERVICE KIT - FULL SERVICE (REQUIRES COUNTERMEASURE TOOL) - VIVID AIR B1-B3 (2014-2019)
S	00.4315.032.370	AM REAR SHOCK AIR CAN SERVICE KIT, BASIC - VIVID AIR B1 (2014-2015)
	TUNE	
1	11.4118.023.063	REAR SHOCK TUNE ASSEMBLY - LOW, VIVID/VIVID AIR R2C B1 NEW
1	11.4118.023.064	REAR SHOCK TUNE ASSEMBLY - MID, VIVID/VIVID AIR R2C B1 NEW
1	11.4118.023.065	REAR SHOCK TUNE ASSEMBLY - HIGH, VIVID/VIVID AIR R2CB1 NEW
2	11.4118.024.002	REAR SHOCK TUNE ASSEMBLY - HIGH, VIVID/VIVID AIR R2C B1
	DAMPER	
3	11.4118.026.000	REAR SHOCK RESERVOIR - 200/216 VIVID/VIVID AIR B1
3	11.4118.026.001	REAR SHOCK RESERVOIR - 222/240 VIVID/VIVID AIR B1
4	11.4118.028.001	REAR SHOCK REBOUND KNOB KIT - (INCLUDES LEVER & BOLT) - LOW SPEED VIVID/VIVID AIR B1
	11.4118.022.003	REAR SHOCK DAMPER BODY/RESERVOIR ASSY - 240X76 (ASSEMBLED) VIVID R2C B1
ns	11.4118.022.006	REAR SHOCK DAMPER BODY/RESERVOIR ASSY - 216X63 (ASSEMBLED) VIVID AIR R2CB1
ns	11.4118.022.007	REAR SHOCK DAMPER BODY/RESERVOIR ASSY - 222X70 (ASSEMBLED) VIVID AIR R2CB1
ns	11.4118.022.008	REAR SHOCK DAMPER BODY/RESERVOIR ASSY - 240X76 (ASSEMBLED) VIVID AIR R2CB1
	AIR CAN	
	11.4118.033.000	REAR SHOCK AIR CAN ASSEMBLY - 200X57 (INCLUDES SEALS, 15W50 & DYNAMIC SEAL GREASE) - VIVID AIR B1
5	11.4118.033.001	REAR SHOCK AIR CAN ASSEMBLY - 216X63 (INCLUDES SEALS, 15W50 & DYNAMIC SEAL GREASE) - VIVID AIR B1
5	11.4118.033.002	REAR SHOCK AIR CAN ASSEMBLY - 222X70 (INCLUDES SEALS, 15W50 & DYNAMIC SEAL GREASE) - VIVID AIR B1
5	11.4118.033.003	REAR SHOCK AIR CAN ASSEMBLY - 240X76 (INCLUDES SEALS, 15W50 & DYNAMIC SEAL GREASE) - VIVID AIR B1
6	11.4115.101.010	REAR SHOCK AIR VALVE KIT - (INCLUDES VALVE, O-RINGS & CAP)- VIVID AIR B1 (2011-2019)
	TOOLS/GREASE/FLUIDS	
7	00.4118.045.001	REAR SHOCK SPRING COMPRESSOR TOOL, COUNTER MEASURE - ROCKSHOX VIVID/VIVID AIR
8	00.4315.029.010	REAR SHOCK WRENCH, AIR CAN - ROCKSHOX VIVID AIR
9	00.4315.028.010	REAR SHOCK SPANNER WRENCH/AIR VALVE TOOL - ROCKSHOX VIVID/VIVID AIR/SUPER DELUXE COIL
10	00.4315.026.010	REAR SHOCK 1/2"X1/2" BUSHING TOOL (EYELET/SEALHEAD) ROCKSHOX
11	00.4115.154.020	REAR SHOCK VISE BLOCKS, 3 HOLE FOR ROCKSHOX MONARCH/VIVID/VIVID AIR/REVERB
12	00.4115.185.000	REAR SHOCK BODY VISE BLOCKS, (FOR SHOCK SERVICE) - KAGE/VIVID
13	00.4318.012.002	REAR SHOCK 31MM FLAT WRENCH (CROWFOOT COMPATIBLE) - VIVID AIR RESERVOIR
ns	00.4315.023.010	HIGH-PRESSURE FORK/SHOCK PUMP (300 PSI MAX) ROCKSHOX
ns	00.4315.023.030	HIGH-PRESSURE FORK/SHOCK PUMP (600 PSI MAX) ROCKSHOX
ns	00.4315.023.040	HIGH-PRESSURE FORK/SHOCK PUMP (300 PSI MAX) ROCKSHOX DIGITALGAUGE
ns	00.4315.022.010	REAR SHOCK SCHRADER VALVE REMOVAL TOOL ROCKSHOX
ns	11.4115.094.010	LUBRICANT, REAR SHOCK AIR CAN, MAXIMA 15W 50, 1 LITER BOTTLE
ns	00.4318.008.002	GREASE ROCKSHOX DYNAMIC SEAL GREASE (PTFE) 1OZ - RECOMMENDED FOR SERVICING REAR SHOCKS & FORKS
ns	00.4318.008.004	GREASE ROCKSHOX DYNAMIC SEAL GREASE 500ML - RECOMMENDED FOR SERVICING REAR SHOCKS & FORKS
ns	11.4115.094.030	MAXIMA SUSPENSION OIL PLUSH, 3WT 1 LITER BOTTLE - REAR SHOCK/CHARGER DAMPER

VIVID AIR (2011-2013)

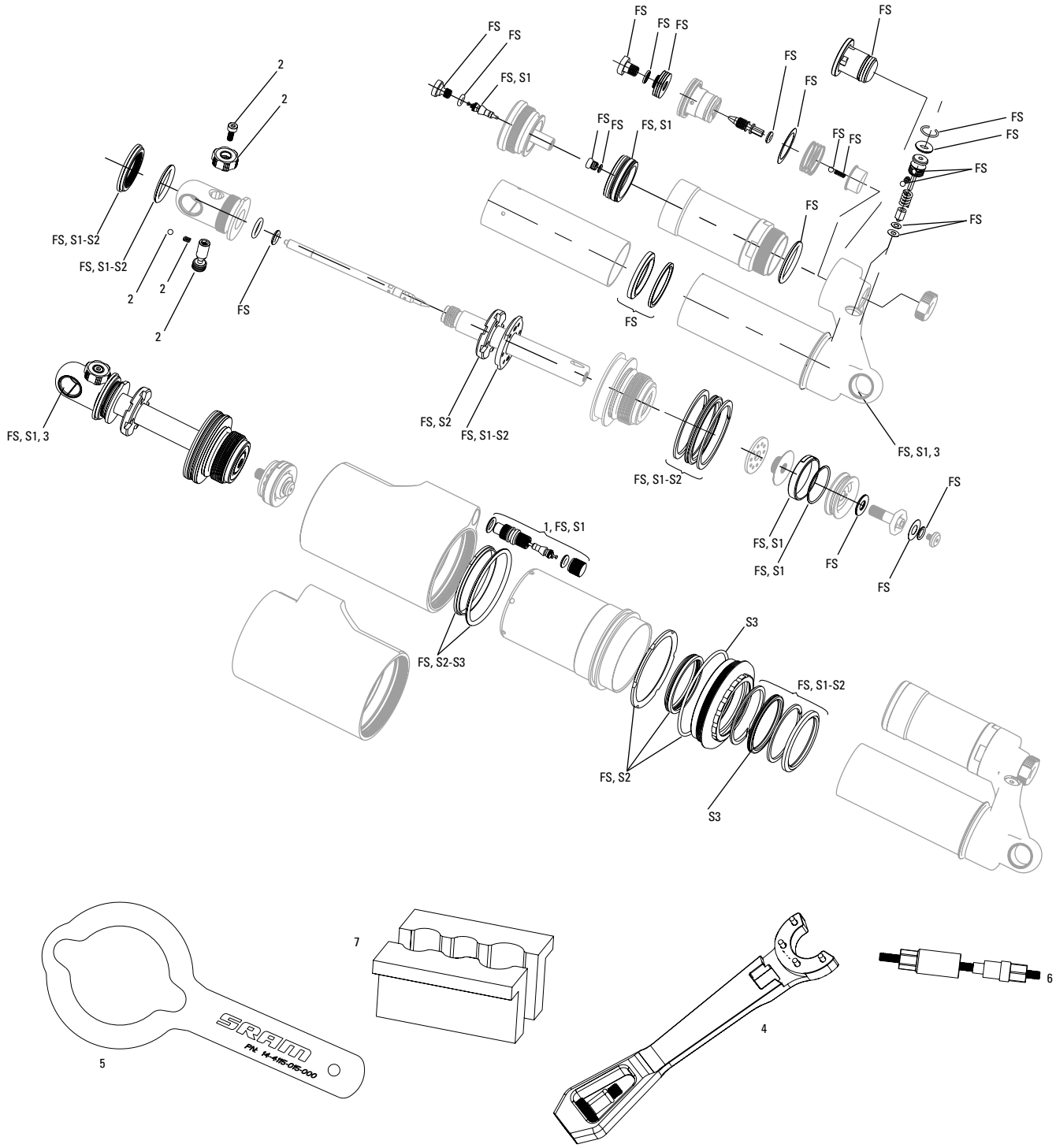

Note:
1. Not all service parts visible in exploded views. Vivid Air Service Kit includes o-rings, seals, glide rings, ball bearings, and detent springs.
2. Air can kits are assembled and included all seals pictured.
3. Vivid air can wrench is required for air can removal. Vivid spanner wrench is required for reservoir removal.
4. Use '1/2"x1/2" Rear Shock Bushing/Mount Hardware Tool' to remove and install eyelet bushing and mounting hardware.

VIVID AIR (2011-2013)

	SERVCE	
FS	11.4115.092.010	REAR SHOCK SERVICE KIT - FULL SERVICE VIVID AIR (2011-2013)
S1	11.4115.100.010	REAR SHOCK SERVICE KIT - BASIC - VIVID AIR (2011-2013)
S2	11.4115.093.010	REAR SHOCK SERVICE KIT - AIR CAN - 2011 VIVID AIR
S3	00.4315.032.220	AM REAR SHOCK SERVICE KIT, BASIC (INCLUDES AIR CAN SEALS ONLY) - VIVID AIR (2012-2013)
	SPARES	
1	11.4115.101.010	REAR SHOCK AIR VALVE KIT - (INCLUDES VALVE, O-RINGS & CAP)- VIVID AIR B1 (2011-2019)
2	11.4115.085.010	REAR SHOCK REBOUND KNOB KIT - 2011 VIVID/VIVID AIR/KAGE (NOT COMPATIBLE 2009-2010)
3	11.4115.013.000	REAR SHOCK EYELET BUSHING KIT -1/2"X1/2" (QTY 2)
	TOOLS/GREASE/FLUIDS	
4	00.4315.028.010	REAR SHOCK SPANNER WRENCH/AIR VALVE TOOL - ROCKSHOX VIVID/VIVID AIR/SUPER DELUXE COIL
5	00.4315.029.010	REAR SHOCK WRENCH, AIR CAN - ROCKSHOX VIVID AIR
6	00.4315.026.010	REAR SHOCK 1/2"X1/2" BUSHING TOOL (EYELET/SEALHEAD) ROCKSHOX
7	00.4115.154.020	REAR SHOCK VISE BLOCKS, 3 HOLE FOR ROCKSHOX MONARCH/VIVID/VIVID AIR/REVERB
ns	00.4315.023.010	HIGH-PRESSURE FORK/SHOCK PUMP (300 PSI MAX) ROCKSHOX
ns	00.4315.023.030	HIGH-PRESSURE FORK/SHOCK PUMP (600 PSI MAX) ROCKSHOX
ns	00.4315.023.040	HIGH-PRESSURE FORK/SHOCK PUMP (300 PSI MAX) ROCKSHOX DIGITALGAUGE
ns	00.4315.022.010	REAR SHOCK SCHRADER VALVE REMOVAL TOOL ROCKSHOX
ns	11.4115.094.010	LUBRICANT, REAR SHOCK AIR CAN, MAXIMA 15W 50, 1 LITER BOTTLE
ns	00.4318.008.002	GREASE ROCKSHOX DYNAMIC SEAL GREASE (PTFE) 1OZ - RECOMMENDED FOR SERVICING REAR SHOCKS & FORKS
ns	00.4318.008.004	GREASE ROCKSHOX DYNAMIC SEAL GREASE 500ML - RECOMMENDED FOR SERVICING REAR SHOCKS & FORKS
ns	11.4115.094.030	MAXIMA SUSPENSION OIL PLUSH, 3WT 1 LITER BOTTLE - REAR SHOCK/CHARGER DAMPER

MOUNTING HARDWARE - 1/2” x 1/2”

Note: Use with - Ario, Monarch, Monarch Plus, Kage, Vivid, Vivid Air

11.4115.012.000	REAR SHOCK MOUNTING HARDWARE 1/2"X1/2" 21.8X8 3-PIECE (1 SET)
11.4115.012.010	REAR SHOCK MOUNTING HARDWARE 1/2"X1/2" 22.2X8 3-PIECE (1 SET)
11.4115.012.020	REAR SHOCK MOUNTING HARDWARE 1/2"X1/2" 23.0X8 3-PIECE (1 SET)
11.4115.012.030	REAR SHOCK MOUNTING HARDWARE 1/2"X1/2" 24.0X8 3-PIECE (1 SET)
11.4115.012.040	REAR SHOCK MOUNTING HARDWARE 1/2"X1/2" 24.4X8 3-PIECE (1 SET)
11.4115.012.050	REAR SHOCK MOUNTING HARDWARE 1/2"X1/2" 25.4X8 3-PIECE (1 SET)
11.4115.012.060	REAR SHOCK MOUNTING HARDWARE 1/2"X1/2" 27.4X8 3-PIECE (1 SET)
11.4115.012.070	REAR SHOCK MOUNTING HARDWARE 1/2"X1/2" 28.0X8 3-PIECE (1 SET)
11.4115.012.080	REAR SHOCK MOUNTING HARDWARE 1/2"X1/2" 30.0X8 3-PIECE (1 SET)
11.4115.012.090	REAR SHOCK MOUNTING HARDWARE 1/2"X1/2" 31.75X8 3-PIECE (1 SET)
11.4115.012.100	REAR SHOCK MOUNTING HARDWARE 1/2"X1/2" 32.4X8 3-PIECE (1 SET)
11.4115.012.110	REAR SHOCK MOUNTING HARDWARE 1/2"X1/2" 33.0X8 3-PIECE (1 SET)
11.4115.012.120	REAR SHOCK MOUNTING HARDWARE 1/2"X1/2" 34.0X8 3-PIECE (1 SET)
11.4115.012.130	REAR SHOCK MOUNTING HARDWARE 1/2"X1/2" 35.0X8 3-PIECE (1 SET)
11.4115.012.140	REAR SHOCK MOUNTING HARDWARE 1/2"X1/2" 36.0X8 3-PIECE (1 SET)
11.4115.012.150	REAR SHOCK MOUNTING HARDWARE 1/2"X1/2" 37.4X8 3-PIECE (1 SET)
11.4115.012.160	REAR SHOCK MOUNTING HARDWARE 1/2"X1/2" 37.6X8 3-PIECE (1 SET)
11.4115.012.170	REAR SHOCK MOUNTING HARDWARE 1/2"X1/2" 38.0X8 3-PIECE (1 SET)
11.4115.012.180	REAR SHOCK MOUNTING HARDWARE 1/2"X1/2" 40.0X8 3-PIECE (1 SET)
11.4115.012.190	REAR SHOCK MOUNTING HARDWARE 1/2"X1/2" 41.0X8 3-PIECE (1 SET)
11.4115.012.200	REAR SHOCK MOUNTING HARDWARE 1/2"X1/2" 41.5X8 3-PIECE (1 SET)
11.4115.012.210	REAR SHOCK MOUNTING HARDWARE 1/2"X1/2" 42.0X8 3-PIECE (1 SET)
11.4115.012.220	REAR SHOCK MOUNTING HARDWARE 1/2"X1/2" 44.0X8 3-PIECE (1 SET)
11.4115.012.230	REAR SHOCK MOUNTING HARDWARE 1/2"X1/2" 44.5X8 3-PIECE (1 SET)
11.4115.012.240	REAR SHOCK MOUNTING HARDWARE 1/2"X1/2" 45.0X8 3-PIECE (1 SET)
11.4115.012.250	REAR SHOCK MOUNTING HARDWARE 1/2"X1/2" 46.0X8 3-PIECE (1 SET)
11.4115.012.260	REAR SHOCK MOUNTING HARDWARE 1/2"X1/2" 47.8X8 3-PIECE (1 SET)
11.4115.012.270	REAR SHOCK MOUNTING HARDWARE 1/2"X1/2" 50.0X8 3-PIECE (1 SET)
11.4115.012.280	REAR SHOCK MOUNTING HARDWARE 1/2"X1/2" 51.95X8 3-PIECE (1 SET)
11.4115.012.290	REAR SHOCK MOUNTING HARDWARE 1/2"X1/2" 54.0X8 3-PIECE (1 SET)
11.4115.012.300	REAR SHOCK MOUNTING HARDWARE 1/2"X1/2" 55.0X8 3-PIECE (1 SET)
11.4115.012.310	REAR SHOCK MOUNTING HARDWARE 1/2"X1/2" 56.0X8 3-PIECE (1 SET)
11.4115.012.320	REAR SHOCK MOUNTING HARDWARE 1/2"X1/2" 16.0X6 3-PIECE (1 SET)
11.4115.012.330	REAR SHOCK MOUNTING HARDWARE 1/2"X1/2" 21.8X6 3-PIECE (1 SET)
11.4115.012.340	REAR SHOCK MOUNTING HARDWARE 1/2"X1/2" 22.2X6 3-PIECE (1 SET)
11.4115.012.350	REAR SHOCK MOUNTING HARDWARE 1/2"X1/2" 24.4X6 3-PIECE (1 SET)
11.4115.012.360	REAR SHOCK MOUNTING HARDWARE 1/2"X1/2" 24.6X6 3-PIECE (1 SET)
11.4115.012.370	REAR SHOCK MOUNTING HARDWARE 1/2"X1/2" 25.4X6 3-PIECE (1 SET)
11.4115.012.380	REAR SHOCK MOUNTING HARDWARE 1/2"X1/2" 28.6X6 3-PIECE (1 SET)
11.4115.012.390	REAR SHOCK MOUNTING HARDWARE 1/2"X1/2" 31.75X6 3-PIECE (1 SET)
11.4115.012.400	REAR SHOCK MOUNTING HARDWARE 1/2"X1/2" 33.0X6 3-PIECE (1 SET)
11.4115.012.410	REAR SHOCK MOUNTING HARDWARE 1/2"X1/2" 34.0X6 3-PIECE (1 SET)
11.4115.012.420	REAR SHOCK MOUNTING HARDWARE 1/2"X1/2" 35.0X6 3-PIECE (1 SET)
11.4115.012.430	REAR SHOCK MOUNTING HARDWARE 1/2"X1/2" 36.0X6 3-PIECE (1 SET)
11.4115.012.440	REAR SHOCK MOUNTING HARDWARE 1/2"X1/2" 40.0X6 3-PIECE (1 SET)
11.4115.012.450	REAR SHOCK MOUNTING HARDWARE 1/2"X1/2" 41.0X6 3-PIECE (1 SET)
11.4115.012.460	REAR SHOCK MOUNTING HARDWARE 1/2"X1/2" 42.0X6 3-PIECE (1 SET)
11.4115.012.470	REAR SHOCK MOUNTING HARDWARE 1/2"X1/2" 45.0X6 3-PIECE (1 SET)
11.4115.012.480	REAR SHOCK MOUNTING HARDWARE 1/2"X1/2" 50.0X6 3-PIECE (1 SET)
11.4115.012.490	REAR SHOCK MOUNTING HARDWARE 1/2"X1/2" 30.0X10 3-PIECE (1 SET)
11.4115.012.500	REAR SHOCK MOUNTING HARDWARE 1/2"X1/2" 22.2X9.5 3-PIECE (1 SET)
11.4115.012.510	REAR SHOCK MOUNTING HARDWARE 1/2"X1/2" 57.0X8 3-PIECE (1 SET)
11.4115.012.520	REAR SHOCK MOUNTING HARDWARE 1/2"X1/2" 58.0X8 3-PIECE (1 SET)
11.4115.012.530	REAR SHOCK MOUNTING HARDWARE 1/2"X1/2" 60.0X8 3-PIECE (1 SET)
11.4115.012.540	REAR SHOCK MOUNTING HARDWARE 1/2"X1/2" 33.6X8 3-PIECE (1 SET)
11.4115.012.550	REAR SHOCK MOUNTING HARDWARE 1/2"X1/2" 16.0X8 3-PIECE (1 SET)
11.4115.012.560	REAR SHOCK MOUNTING HARDWARE 1/2"X1/2" 19.0X8 3-PIECE (1 SET)
11.4115.012.570	REAR SHOCK MOUNTING HARDWARE 1/2"X1/2" 32.0X8 3-PIECE (1 SET)
11.4115.012.580	REAR SHOCK MOUNTING HARDWARE 1/2"X1/2" 22.0X8 3-PIECE (1 SET)
11.4115.012.590	REAR SHOCK MOUNTING HARDWARE 1/2"X1/2" 22.4X10 3-PIECE (1 SET)
11.4115.012.600	REAR SHOCK MOUNTING HARDWARE 1/2"X1/2" 22.2X10 3-PIECE (1 SET)
11.4115.012.610	REAR SHOCK MOUNTING HARDWARE 1/2"X1/2" 61.0X8 3-PIECE (1 SET)
11.4115.012.620	REAR SHOCK MOUNTING HARDWARE 1/2"X1/2" 40.0X10 3-PIECE (1 SET)
11.4115.012.630	REAR SHOCK MOUNTING HARDWARE 1/2"X1/2" 33.5X10 3-PIECE (1 SET)
11.4115.012.640	REAR SHOCK MOUNTING HARDWARE 1/2"X1/2" 14.0X8 3-PIECE (1 SET)
11.4115.012.650	REAR SHOCK MOUNTING HARDWARE 1/2"X1/2" 15.7X8 3-PIECE (1 SET)
11.4115.012.660	REAR SHOCK MOUNTING HARDWARE 1/2"X1/2" 17.4X10 3-PIECE (1 SET)
11.4115.012.670	REAR SHOCK MOUNTING HARDWARE 1/2"X1/2" 18.0X9.5 3-PIECE (1 SET)
11.4115.012.680	REAR SHOCK MOUNTING HARDWARE 1/2"X1/2" 30.8X8 3-PIECE (1 SET)
11.4115.012.690	REAR SHOCK MOUNTING HARDWARE 1/2"X1/2" 28.6X8 3-PIECE (1 SET)
11.4115.012.700	REAR SHOCK MOUNTING HARDWARE 1/2"X1/2" 24.2X8 3-PIECE (1 SET)
11.4115.012.710	REAR SHOCK MOUNTING HARDWARE 1/2"X1/2" 23.8X8 3-PIECE (1 SET)
11.4115.012.720	REAR SHOCK MOUNTING HARDWARE 1/2"X1/2" 42.2X8 3-PIECE (1 SET)
11.4115.012.730	REAR SHOCK MOUNTING HARDWARE 1/2"X1/2" 19.0X6 3-PIECE (1 SET)
11.4115.012.740	REAR SHOCK MOUNTING HARDWARE 1/2"X1/2" 25.0X8MM 3-PIECE (1 SET)
11.4115.012.750	REAR SHOCK MOUNTING HARDWARE 1/2"X1/2" 35.5X8MM 3-PIECE (1 SET)
11.4115.012.760	REAR SHOCK MOUNTING HARDWARE 1/2"X1/2" 52.0X8MM 3-PIECE (1 SET)
11.4115.012.770	REAR SHOCK MOUNTING HARDWARE 1/2"X1/2" 52.9X8MM 3-PIECE (1 SET)
11.4115.012.780	REAR SHOCK MOUNTING HARDWARE 1/2"X1/2" 25.2X8MM 3-PIECE (1 SET)
11.4115.012.790	REAR SHOCK MOUNTING HARDWARE 1/2"X1/2" 39.9X8MM 3-PIECE (1 SET)
11.4115.012.800	REAR SHOCK MOUNTING HARDWARE 1/2"X1/2" 23.3X8MM 3-PIECE (1 SET)
11.4115.012.810	REAR SHOCK MOUNTING HARDWARE 1/2"X1/2" 18.0X8MM 3-PIECE (1 SET)
11.4115.012.820	REAR SHOCK MOUNTING HARDWARE 1/2"X1/2" 26.0X8MM 3-PIECE (1 SET)
11.4115.012.830	REAR SHOCK MOUNTING HARDWARE 1/2"X1/2" 16.2X10MM 3-PIECE (1SET)
11.4115.012.840	REARMTHWARE 1/2X1/2 38.6X8MM 3PC 1SET
11.4115.012.850	REARMTHWARE 1/2X1/2 31.75X8MM 3PC SHRT
11.4115.012.860	REARMTHWARE 1/2X1/2 15.0X8MM 3PC SHRT
11.4115.012.870	REARMTHWARE 1/2X1/2 14.0X10MM 3PC SHRT
11.4115.012.880	REARMTHWARE 1/2X1/2 24.0X6MM 3PC 1SET
11.4115.012.890	REARMTHWARE 1/2X1/2 29.94X6MM 3PC 1SET
11.4115.046.000	REAR SHOCK MOUNTING HARDWARE 1/2"X1/2" 12.70X8 CENTER PIN (06 SPECIALIZED DEMO 8 SHAFT EYELET)
11.4118.044.000	REAR SHOCK MOUNTING HARDWARE, TREK DRCV SLASH RETRO KIT FORROCKSHOX (INCLUDES UPPER BOLT & NUT ONLY, USE WITH 40X8 3PCHARDWARE SET) - TREK SLASH 27.5 2012-2014

MOUNTING HARDWARE - 12MM EYLET

Note: Use with - **2003-2011 Rock Shox Ario*, Bar, MC, and Pearl rear shocks with 12mm eyelet dimensions**

11.4115.004.000	REAR SHOCK EYELET BUSHING KIT - 12MM (QTY 2) - ARIO/BAR/MC/PEARL
11.4308.405.000	REAR SHOCK MOUNTING HARDWARE - 05-07 50.0X8 3-PIECE (1 SET) - ARIO/BAR/MC/PEARL
11.4311.646.000	REAR SHOCK MOUNTING HARDWARE - 05-07 21.84X6 3-PIECE (1 SET) - ARIO/BAR/MC/PEARL
11.4311.647.000	REAR SHOCK MOUNTING HARDWARE - 05-07 22.2X6 3-PIECE (1 SET) - ARIO/BAR/MC/PEARL
11.4311.650.000	REAR SHOCK MOUNTING HARDWARE - 05-07 24.0X8 3-PIECE (1 SET) - ARIO/BAR/MC/PEARL
11.4311.658.000	REAR SHOCK MOUNTING HARDWARE - 05-07 30.0X8 3-PIECE (1 SET) - ARIO/BAR/MC/PEARL
11.4311.648.000	REAR SHOCK MOUNTING HARDWARE - 05-07 22.2X8 3-PIECE (1 SET) - ARIO/BAR/MC/PEARL

SIDLUXE A1 (2021)

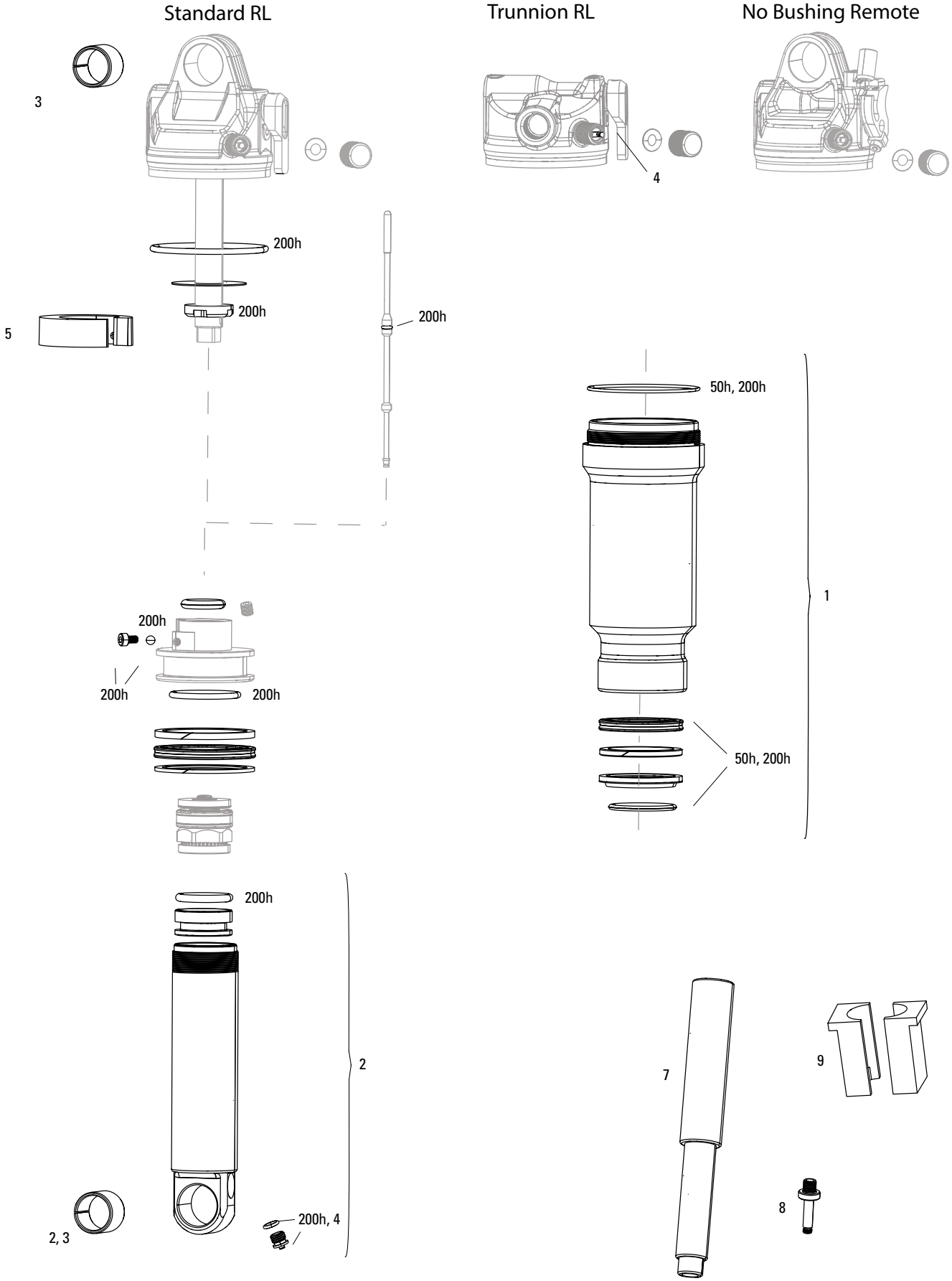

SIDLUXE A1 (2021)

	SERVICE	
50h	00.4318.037.000	50 HOUR SERVICE KIT (INCLUDES AIR CAN SEALS, PISTON SEAL, GLIDE RINGS, SEAL GREASE/OIL) - SIDLUXE A1 (2020)
200h	00.4318.037.002	200 HOUR/1 YEAR SERVICE KIT (INCLUDES AIR CAN SEALS, PISTON SEAL, GLIDE RINGS, IFP SEALS, SEAL GREASE/OIL) - SIDLUXE A1 (2020)
	AIR CAN	
1	11.4118.059.004	REAR SHOCK AIR CAN ASSEMBLY - DEBONAIR 145/170X27.5-35MM (INCLUDES DECALS, SEALS, 15W50 & DYNAMIC SEAL GREASE) - SIDLUXE A1 (2021)
1	11.4118.059.005	REAR SHOCK AIR CAN ASSEMBLY - DEBONAIR 165/190X37.5-45MM (INCLUDES DECALS, SEALS, 15W50 & DYNAMIC SEAL GREASE) - SIDLUXE A1 (2021)
1	11.4118.059.006	REAR SHOCK AIR CAN ASSEMBLY - DEBONAIR 185/210X47.5-55MM (INCLUDES DECALS, SEALS, 15W50 & DYNAMIC SEAL GREASE) - SIDLUXE A1 (2021)
1	11.4118.059.007	REAR SHOCK AIR CAN ASSEMBLY - SOLO AIR 145/170X27.5-35MM (INCLUDES DECALS, SEALS, 15W50 & DYNAMIC SEAL GREASE) - SIDLUXE A1 (2021)
1	11.4118.059.008	REAR SHOCK AIR CAN ASSEMBLY - SOLO AIR 165/190X37.5-45MM (INCLUDES DECALS, SEALS, 15W50 & DYNAMIC SEAL GREASE) - SIDLUXE A1 (2021)
1	11.4118.059.009	REAR SHOCK AIR CAN ASSEMBLY - SOLO AIR 185/210X47.5-55MM (INCLUDES DECALS, SEALS, 15W50 & DYNAMIC SEAL GREASE) - SIDLUXE A1 (2021)
	DAMPER	
2	11.4118.081.000	REAR SHOCK DAMPER BODY/IFP - STANDARD EYELET 27.5MM (INCLUDES DAMPER BODY, IFP, VALVE CORE, CAPS AND EYELET BUSHING) - SIDLUXE A1 (2021)
2	11.4118.081.001	REAR SHOCK DAMPER BODY/IFP - STANDARD EYELET 30MM (INCLUDES DAMPER BODY, IFP, VALVE CORE, CAPS AND EYELET BUSHING) - SIDLUXE A1 (2021)
2	11.4118.081.002	REAR SHOCK DAMPER BODY/IFP - STANDARD EYELET 32.5MM (INCLUDES DAMPER BODY, IFP, VALVE CORE, CAPS AND EYELET BUSHING) - SIDLUXE A1 (2021)
2	11.4118.081.003	REAR SHOCK DAMPER BODY/IFP - STANDARD EYELET 35MM (INCLUDES DAMPER BODY, IFP, VALVE CORE, CAPS AND EYELET BUSHING) - SIDLUXE A1 (2021)
2	11.4118.081.004	REAR SHOCK DAMPER BODY/IFP - STANDARD EYELET 37.5MM (INCLUDES DAMPER BODY, IFP, VALVE CORE, CAPS AND EYELET BUSHING) - SIDLUXE A1 (2021)
2	11.4118.081.005	REAR SHOCK DAMPER BODY/IFP - STANDARD EYELET 40MM (INCLUDES DAMPER BODY, IFP, VALVE CORE, CAPS AND EYELET BUSHING) - SIDLUXE A1 (2021)
2	11.4118.081.006	REAR SHOCK DAMPER BODY/IFP - STANDARD EYELET 42.5MM (INCLUDES DAMPER BODY, IFP, VALVE CORE, CAPS AND EYELET BUSHING) - SIDLUXE A1 (2021)
2	11.4118.081.007	REAR SHOCK DAMPER BODY/IFP - STANDARD EYELET 45MM (INCLUDES DAMPER BODY, IFP, VALVE CORE, CAPS AND EYELET BUSHING) - SIDLUXE A1 (2021)
2	11.4118.081.008	REAR SHOCK DAMPER BODY/IFP - STANDARD EYELET 47.5MM (INCLUDES DAMPER BODY, IFP, VALVE CORE, CAPS AND EYELET BUSHING) - SIDLUXE A1 (2021)
2	11.4118.081.009	REAR SHOCK DAMPER BODY/IFP - STANDARD EYELET 50MM (INCLUDES DAMPER BODY, IFP, VALVE CORE, CAPS AND EYELET BUSHING) - SIDLUXE A1 (2021)
	SPARES	
3	11.4115.013.000	REAR SHOCK EYELET BUSHING KIT -1/2"X1/2" (QTY 2)
4	11.4308.327.002	AIR VALVE KIT - SCHRADER CORE (QTY 2) - FORKS/SHOCKS/REVERB
5	11.4118.051.004	REAR SHOCK VOLUME REDUCER KIT - (INCLUDES SMALL AND LARGE TOKEN) - SIDLUXE (2021)
	TOOLS/GREASE/FLUIDS	
ns	11.4115.094.010	LUBRICANT, REAR SHOCK AIR CAN, MAXIMA 15W 50, 1 LITER BOTTLE
ns	00.4318.008.002	GREASE ROCKSHOX DYNAMIC SEAL GREASE (PTFE) 1OZ - RECOMMENDED FOR SERVICING REAR SHOCKS & FORKS
ns	00.4318.008.004	GREASE ROCKSHOX DYNAMIC SEAL GREASE 500ML - RECOMMENDED FOR SERVICING REAR SHOCKS & FORKS
ns	00.4315.026.010	REAR SHOCK 1/2"X1/2" BUSHING TOOL (EYELET/SEALHEAD) ROCKSHOX
ns	00.4315.023.010	HIGH-PRESSURE FORK/SHOCK PUMP (300 PSI MAX) ROCKSHOX
ns	00.4315.023.030	HIGH-PRESSURE FORK/SHOCK PUMP (600 PSI MAX) ROCKSHOX
ns	00.4315.023.040	HIGH-PRESSURE FORK/SHOCK PUMP (300 PSI MAX) ROCKSHOX DIGITALGAUGE
ns	00.4315.022.010	REAR SHOCK SCHRADER VALVE REMOVAL TOOL ROCKSHOX
ns	11.4115.094.040	MAXIMA SUSPENSION OIL PLUSH, 7WT 1 LITER BOTTLE - REAR SHOCK
7	00.4318.041.000	REAR SHOCK IFP HEIGHT TOOL 19MMX70MM (FOR SETTING IFP HEIGHT) - SIDLUXE A1+ (2020+)
8	00.4318.042.000	REAR SHOCK AIR VALVE ADAPTER (FOR CHARGING IFP) - SIDLUXE A1+ (2020+)
9	00.4318.040.000	REAR SHOCK BODY VISE BLOCKS, 23.8 (FOR SETTING IFP) - SIDLUXE A1+ (2020+)

DELUXE A1-B2 (2017-2020)

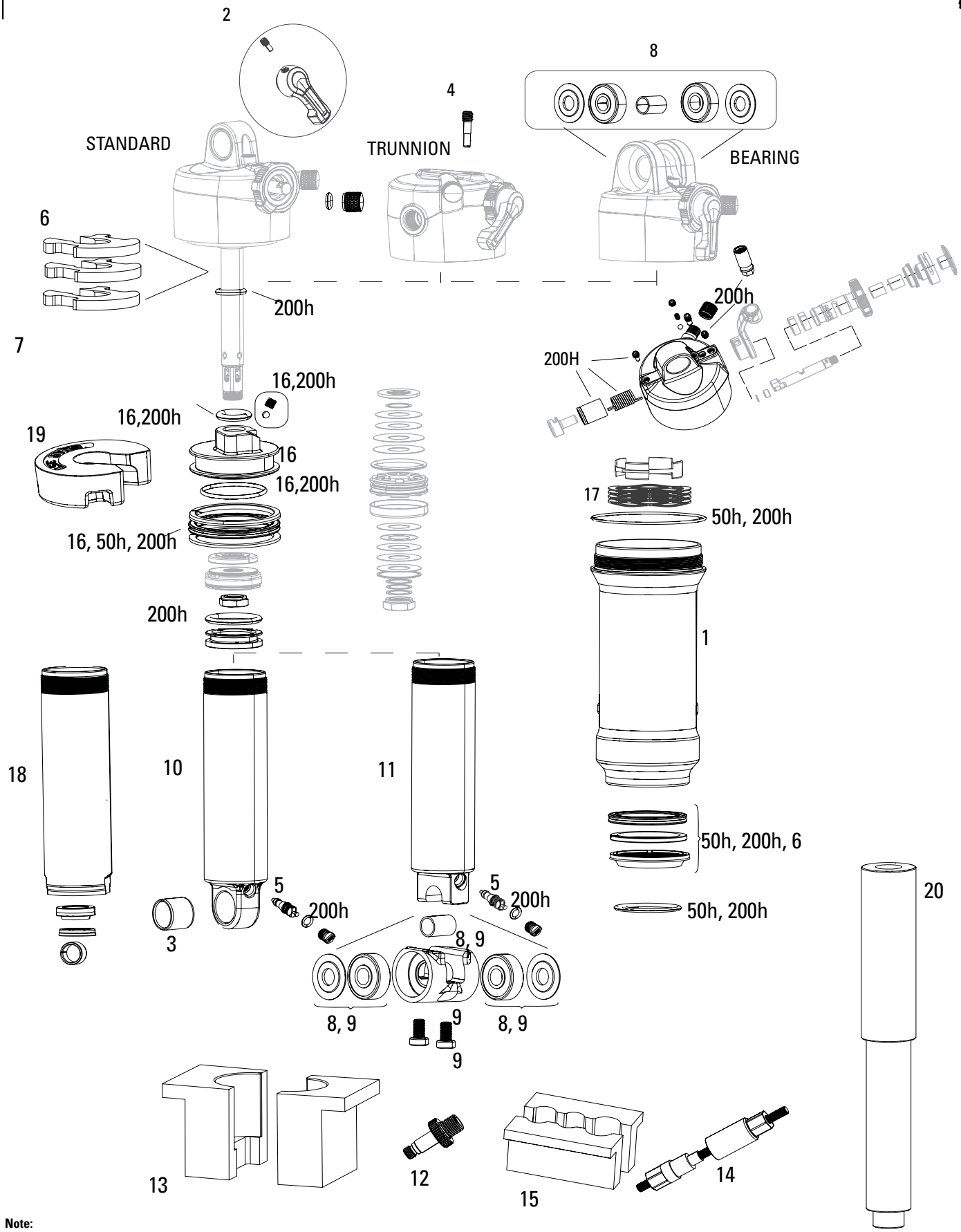

Note:
1. The maximum volume of volume tokens is 3.

DELUXE A1-B2 (2017-2020)

	UPGRADE	
ns	00.4318.028.000	AIR CAN UPGRADE KIT - MEGNEG 185/210X47.5-55MM (INCLUDES AIR CAN,NEG VOLUME SPACERS, SEALS, GREASE, OIL & DECALS) - DELUXE/SUPER DELUXE SHOCKS
ns	00.4318.028.001	AIR CAN UPGRADE KIT - MEGNEG 205/230X57.5-65MM (INCLUDES AIR CAN,NEG VOLUME SPACERS, SEALS, GREASE, OIL & DECALS) - DELUXE/SUPER DELUXE SHOCKS
ns	00.4318.028.002	AIR CAN UPGRADE KIT - MEGNEG 225/250X67.5-75MM (INCLUDES AIR CAN,NEG VOLUME SPACERS, SEALS, GREASE, OIL & DECALS) - DELUXE/SUPER DELUXE SHOCKS
	SERVICE	
50h	00.4315.032.615	50 HOUR SERVICE KIT (INCLUDES AIR CAN SEALS, PISTON SEAL, GLIDE RINGS, SEAL GREASE/OIL) - DELUXE/SUPER DELUXE A1-B2 (2017-2020)
200h	00.4318.037.001	200 HOUR/1 YEAR SERVICE KIT (INCLUDES AIR CAN SEALS, PISTON SEAL, GLIDE RINGS, IFP SEALS, REMOTE SPARES, SEAL GREASE/OIL) - DELUXE/DELUXE RMT A1-B2 (2017-2020)/DELUXE NUDE B1+
	AIR CAN	
1	11.4118.033.033	REAR SHOCK AIR CAN ASSEMBLY - SOLO AIR 145/170X35 (INCLUDES DECALS, SEALS, 15W50 & DYNAMIC SEAL GREASE) - DELUXE A1-B2 (2017-2020)
1	11.4118.033.034	REAR SHOCK AIR CAN ASSEMBLY - SOLO AIR 165/190X37.5-45 (INCLUDES DECALS, SEALS, 15W50 & DYNAMIC SEAL GREASE) - DELUXE/SUPER DELUXE (2017+)
1	11.4118.033.035	REAR SHOCK AIR CAN ASSEMBLY - SOLO AIR 185/210X47.5-55 (INCLUDES DECALS, SEALS, 15W50 & DYNAMIC SEAL GREASE) - DELUXE/SUPER DELUXE (2017+)
1	11.4118.033.036	REAR SHOCK AIR CAN ASSEMBLY - SOLO AIR 205/230X57.5-65 (INCLUDES DECALS, SEALS, 15W50 & DYNAMIC SEAL GREASE) - DELUXE/SUPER DELUXE (2017+)
1	11.4118.059.000	REAR SHOCK AIR CAN ASSEMBLY - DEBONAIR V2 BLACK 165/190X37.5-45MM (INCLUDES DECALS) - DELUXE/SUPER DELUXE (2017+)
1	11.4118.059.001	REAR SHOCK AIR CAN ASSEMBLY - DEBONAIR V2 BLACK 185/210X47.5-55MM (INCLUDES DECALS) - DELUXE/SUPER DELUXE (2017+)
1	11.4118.059.002	REAR SHOCK AIR CAN ASSEMBLY - DEBONAIR V2 BLACK 205/230X57.5-65MM (INCLUDES DECALS) - DELUXE/SUPER DELUXE (2017+)
1	11.4118.059.003	REAR SHOCK AIR CAN ASSEMBLY - DEBONAIR V2 BLACK 225/250X67.5-75MM (INCLUDES DECALS) - DELUXE/SUPER DELUXE (2017+)
	SPARES	
2	11.4115.107.080	REAR SHOCK COMPRESSION KNOB KIT - DELUXE RT3 A1 (2017+)
3	11.4115.013.000	REAR SHOCK EYELET BUSHING KIT -1/2"X1/2" (QTY 2)
5	11.4308.327.002	AIR VALVE KIT - SCHRADER CORE (QTY 2) - FORKS/SHOCKS/REVERB
6	11.4118.042.001	REAR SHOCK VOLUME REDUCER KIT - TOKEN 1T/4.7MM (INCLUDES 3 TOKENS) - SUPER DELUXE/ DELUXE (2017+)
19	11.4118.051.002	REAR SHOCK VOLUME REDUCER KIT - GNAR DOG 2.5T/15MM, GREEN (INCLUDES GNAR DOG TOKEN EQUAL TO 2.5 TOKENS) - SUPER DELUXE/DELUXE (2017+)
8	11.4118.046.000	REAR SHOCK EYELET BEARING KIT - WITH SPACERS (INCLUDES BEARINGS & SPACERS FOR BR EYELETS) - DELUXE/SUPER DELUXE BR (2017+)
9	11.4118.049.000	REAR SHOCK EYELET BEARING KIT - (INCLUDES EYELET BEARING BRACKET, BEARING, BOLTS & SPACERS FOR BR EYELETS) - DELUXE/SUPER DELUXE BR (2017+)
4	11.4118.061.000	REAR SHOCK TRAVEL LIMIT SCREW - STANDARD/BEARING (QTY 2) - DELUXE RL/RT A1 (2017)
ns	11.4118.061.001	REAR SHOCK TRAVEL LIMIT SCREW - TRUNNION (QTY 2) - DELUXE RL/RT A1-B2 (2017-2020)
ns	11.4118.055.000	REAR SHOCK COUNTER MEASURE KIT - (INCLUDES SPRING & CARRIER) DELUXE A1/ SUPER DELUXE A1(2017+)
16	11.4118.056.000	REAR SHOCK AIR PISTON SEALHEAD - (INCLUDES SEALS, BLEED VALVE & SCREW) - DELUXE A1+ (2017+)
	DAMPER BODY	
10	11.4118.048.000	REAR SHOCK DAMPER BODY/IFP - STANDARD EYELET 35MM(INCLUDES DAMPER BODY, IFP, VALVE CORE & CAPS) - DELUXE/SUPER DELUXE A1-B2 (2017-2020)
10	11.4118.048.001	REAR SHOCK DAMPER BODY/IFP - STANDARD EYELET 37.5MM (INCLUDES DAMPER BODY, IFP, VALVE CORE, 7.5MM TRAVEL SPACER & CAPS) - DELUXE/SUPER DELUXE A1-B2 (2017-2020)
10	11.4118.048.002	REAR SHOCK DAMPER BODY/IFP - STANDARD EYELET 40MM(INCLUDES DAMPER BODY, IFP, VALVE CORE, 5MM TRAVEL SPACER & CAPS) - DELUXE/SUPER DELUXE A1-B2 (2017-2020)
10	11.4118.048.003	REAR SHOCK DAMPER BODY/IFP - STANDARD EYELET 42.5MM (INCLUDES DAMPER BODY, IFP, VALVE CORE, 2.5MM TRAVEL SPACER & CAPS) - DELUXE/SUPER DELUXE A1-B2 (2017-2020)
10	11.4118.048.004	REAR SHOCK DAMPER BODY/IFP - STANDARD EYELET 45MM(INCLUDES DAMPER BODY, IFP, VALVE CORE & CAPS) - DELUXE/SUPER DELUXE A1-B2 (2017-2020)
10	11.4118.048.005	REAR SHOCK DAMPER BODY/IFP - STANDARD EYELET 47.5MM (INCLUDES DAMPER BODY, IFP, VALVE CORE, 7.5MM TRAVEL SPACER & CAPS) - DELUXE/SUPER DELUXE A1-B2 (2017-2020)
10	11.4118.048.006	REAR SHOCK DAMPER BODY/IFP - STANDARD EYELET 50MM(INCLUDES DAMPER BODY, IFP, VALVE CORE, 5MM TRAVEL SPACER & CAPS) - DELUXE/SUPER DELUXE A1-B2 (2017-2020)
10	11.4118.048.007	REAR SHOCK DAMPER BODY/IFP - STANDARD EYELET 52.5MM (INCLUDES DAMPER BODY, IFP, VALVE CORE, 2.5MM TRAVEL SPACER & CAPS) - DELUXE/SUPER DELUXE A1-B2 (2017-2020)
10	11.4118.048.008	REAR SHOCK DAMPER BODY/IFP - STANDARD EYELET 55MM(INCLUDES DAMPER BODY, IFP, VALVE CORE & CAPS) - DELUXE/SUPER DELUXE A1-B2 (2017-2020)
10	11.4118.048.009	REAR SHOCK DAMPER BODY/IFP - STANDARD EYELET 57.5MM (INCLUDES DAMPER BODY, IFP, VALVE CORE, 7.5MM TRAVEL SPACER & CAPS) - DELUXE/SUPER DELUXE A1-B2 (2017-2020)
10	11.4118.048.010	REAR SHOCK DAMPER BODY/IFP - STANDARD EYELET 60MM(INCLUDES DAMPER BODY, IFP, VALVE CORE, 5MM TRAVEL SPACER & CAPS) - DELUXE/SUPER DELUXE A1-B2 (2017-2020)
10	11.4118.048.011	REAR SHOCK DAMPER BODY/IFP - STANDARD EYELET 62.5MM (INCLUDES DAMPER BODY, IFP, VALVE CORE, 2.5MM TRAVEL SPACER & CAPS) - DELUXE/SUPER DELUXE A1-B2 (2017-2020)
10	11.4118.048.012	REAR SHOCK DAMPER BODY/IFP - STANDARD EYELET 65MM(INCLUDES DAMPER BODY, IFP, VALVE CORE & CAPS) - DELUXE/SUPER DELUXE A1-B2 (2017-2020)
11	11.4118.048.013	REAR SHOCK DAMPER BODY/IFP - BEARING EYELET 35MM(INCLUDES DAMPER BODY, IFP, VALVE CORE & CAPS) - DELUXE/SUPER DELUXE A1-B2 (2017-2020)
11	11.4118.048.014	REAR SHOCK DAMPER BODY/IFP - BEARING EYELET 37.5MM (INCLUDES DAMPER BODY, IFP, VALVE CORE, 7.5MM TRAVEL SPACER & CAPS) - DELUXE/SUPER DELUXE A1-B2 (2017-2020)
11	11.4118.048.015	REAR SHOCK DAMPER BODY/IFP - BEARING EYELET 40MM(INCLUDES DAMPER BODY, IFP, VALVE CORE, 5MM TRAVEL SPACER & CAPS) - DELUXE/SUPER DELUXE A1-B2 (2017-2020)
11	11.4118.048.016	REAR SHOCK DAMPER BODY/IFP - BEARING EYELET 42.5MM (INCLUDES DAMPER BODY, IFP, VALVE CORE, 2.5MM TRAVEL SPACER & CAPS) - DELUXE/SUPER DELUXE A1-B2 (2017-2020)
11	11.4118.048.017	REAR SHOCK DAMPER BODY/IFP - BEARING EYELET 45MM(INCLUDES DAMPER BODY, IFP, VALVE CORE & CAPS) - DELUXE/SUPER DELUXE A1-B2 (2017-2020)
11	11.4118.048.018	REAR SHOCK DAMPER BODY/IFP - BEARING EYELET 47.5MM (INCLUDES DAMPER BODY, IFP, VALVE CORE, 7.5MM TRAVEL SPACER & CAPS) - DELUXE/SUPER DELUXE A1-B2 (2017-2020)
11	11.4118.048.019	REAR SHOCK DAMPER BODY/IFP - BEARING EYELET 50MM(INCLUDES DAMPER BODY, IFP, VALVE CORE, 5MM TRAVEL SPACER & CAPS) - DELUXE/SUPER DELUXE A1-B2 (2017-2020)
11	11.4118.048.020	REAR SHOCK DAMPER BODY/IFP - BEARING EYELET 52.5MM (INCLUDES DAMPER BODY, IFP, VALVE CORE, 2.5MM TRAVEL SPACER & CAPS) - DELUXE/SUPER DELUXE A1-B2 (2017-2020)
11	11.4118.048.021	REAR SHOCK DAMPER BODY/IFP - BEARING EYELET 55MM(INCLUDES DAMPER BODY, IFP, VALVE CORE & CAPS) - DELUXE/SUPER DELUXE A1-B2 (2017-2020)
11	11.4118.048.022	REAR SHOCK DAMPER BODY/IFP - BEARING EYELET 57.5MM (INCLUDES DAMPER BODY, IFP, VALVE CORE, 7.5MM TRAVEL SPACER & CAPS) - DELUXE/SUPER DELUXE A1-B2 (2017-2020)
11	11.4118.048.023	REAR SHOCK DAMPER BODY/IFP - BEARING EYELET 60MM(INCLUDES DAMPER BODY, IFP, VALVE CORE, 5MM TRAVEL SPACER & CAPS) - DELUXE/SUPER DELUXE A1-B2 (2017-2020)
11	11.4118.048.024	REAR SHOCK DAMPER BODY/IFP - BEARING EYELET 62.5MM (INCLUDES DAMPER BODY, IFP, VALVE CORE, 2.5MM TRAVEL SPACER & CAPS) - DELUXE/SUPER DELUXE A1-B2 (2017-2020)
11	11.4118.048.025	REAR SHOCK DAMPER BODY/IFP - BEARING EYELET 65MM(INCLUDES DAMPER BODY, IFP, VALVE CORE & CAPS) - DELUXE/SUPER DELUXE A1-B2 (2017-2020)
10	11.4118.048.026	REAR SHOCK DAMPER BODY/IFP - STANDARD EYELET 50MM(INCLUDES DAMPER BODY, IFP, VALVE CORE & CAPS) - DELUXE A1/ SUPER DELUXE A1 TREK (2017-2020)
10	11.4118.048.027	REAR SHOCK DAMPER BODY/IFP - STANDARD EYELET 67.5MM (INCLUDES DAMPER BODY, IFP, VALVE CORE, 7.5 TRAVEL SPACER& CAPS) - DELUXE/SUPER DELUXE A1-B2 (2017-2020)
10	11.4118.048.028	REAR SHOCK DAMPER BODY/IFP - STANDARD EYELET 70MM(INCLUDES DAMPER BODY, IFP, VALVE CORE, 5 TRAVEL SPACER &CAPS) -DELUXE/SUPER DELUXE A1-B2 (2017-2020)
10	11.4118.048.029	REAR SHOCK DAMPER BODY/IFP - STANDARD EYELET 72.5MM (INCLUDES DAMPER BODY, IFP, VALVE CORE, 2.5 TRAVEL SPACER& CAPS) - DELUXE/SUPER DELUXE A1-B2 (2017-2020)
10	11.4118.048.030	REAR SHOCK DAMPER BODY/IFP - STANDARD EYELET 75MM(INCLUDES DAMPER BODY, IFP, VALVE CORE & CAPS) - DELUXE/SUPER DELUXE A1-B2 (2017-2020)
11	11.4118.048.031	REAR SHOCK DAMPER BODY/IFP - BEARING EYELET 67.5MM (INCLUDES DAMPER BODY, IFP, VALVE CORE,7.5 TRAVEL SPACER & CAPS) - DELUXE/SUPER DELUXE A1-B2 (2017-2020)
11	11.4118.048.032	REAR SHOCK DAMPER BODY/IFP - BEARING EYELET 70MM(INCLUDES DAMPER BODY, IFP, VALVE CORE, 5 TRAVEL SPACER &CAPS) - DELUXE/SUPER DELUXE A1-B2 (2017-2020)
11	11.4118.048.033	REAR SHOCK DAMPER BODY/IFP - BEARING EYELET 72.5MM (INCLUDES DAMPER BODY, IFP, VALVE CORE, 2.5 TRAVEL SPACER& CAPS) - DELUXE/SUPER DELUXE A1-B2 (2017-2020)
11	11.4118.048.034	REAR SHOCK DAMPER BODY/IFP - BEARING EYELET 75MM(INCLUDES DAMPER BODY, IFP, VALVE CORE & CAPS) - DELUXE/SUPER DELUXE A1-B2 (2017-2020)
	TOOLS/GREASE/FLUIDS	
ns	11.4115.094.010	LUBRICANT, REAR SHOCK AIR CAN, MAXIMA 15W 50, 1 LITER BOTTLE
ns	00.4318.008.002	GREASE ROCKSHOX DYNAMIC SEAL GREASE (PTFE) 10Z - RECOMMENDED FOR SERVICING REAR SHOCKS & FORKS
ns	00.4318.008.004	GREASE ROCKSHOX DYNAMIC SEAL GREASE 500ML - RECOMMENDED FOR SERVICING REAR SHOCKS & FORKS
ns	11.4115.094.040	MAXIMA SUSPENSION OIL PLUSH, 7WT 1 LITER BOTTLE - REAR SHOCK
12	00.4315.027.010	REAR SHOCK AIR VALVE ADAPTER TOOL - REAR SHOCKS
13	00.4318.012.006	REAR SHOCK BODY VISE BLOCKS, 28.58 (FOR SETTING IFP) - DELUXE
14	00.4315.026.010	REAR SHOCK 1/2"X1/2" BUSHING TOOL (EYELET/SEALHEAD) ROCKSHOX
15	00.4115.154.020	REAR SHOCK VISE BLOCKS, 3 HOLE FOR ROCKSHOX MONARCH/VIVID/VIVID AIR/REVERB
20	00.4318.012.010	REAR SHOCK IFP HEIGHT TOOL (FOR SETTING IFP HEIGHT) -MONARCH/DELUXE
ns	00.4318.034.000	REAR SHOCK LOCK PISTON TOOL (USED TO REMOVE LOCKOUT PISTON) - DELUXE RCT/DELUXE NUDE
ns	00.4318.033.000	REAR SHOCK PISTON BOLT SOCKET TOOL (USED TO REMOVE PISTON BOLT) - DELUXE NUDE
ns	00.4315.023.010	HIGH-PRESSURE FORK/SHOCK PUMP (300 PSI MAX) ROCKSHOX
ns	00.4315.023.030	HIGH-PRESSURE FORK/SHOCK PUMP (600 PSI MAX) ROCKSHOX
ns	00.4315.023.040	HIGH-PRESSURE FORK/SHOCK PUMP (300 PSI MAX) ROCKSHOX DIGITALGAUGE
ns	00.4315.022.010	REAR SHOCK SCHRADER VALVE REMOVAL TOOL ROCKSHOX

DELUXE TREK Re:AKTIV A1 (2017-2019)

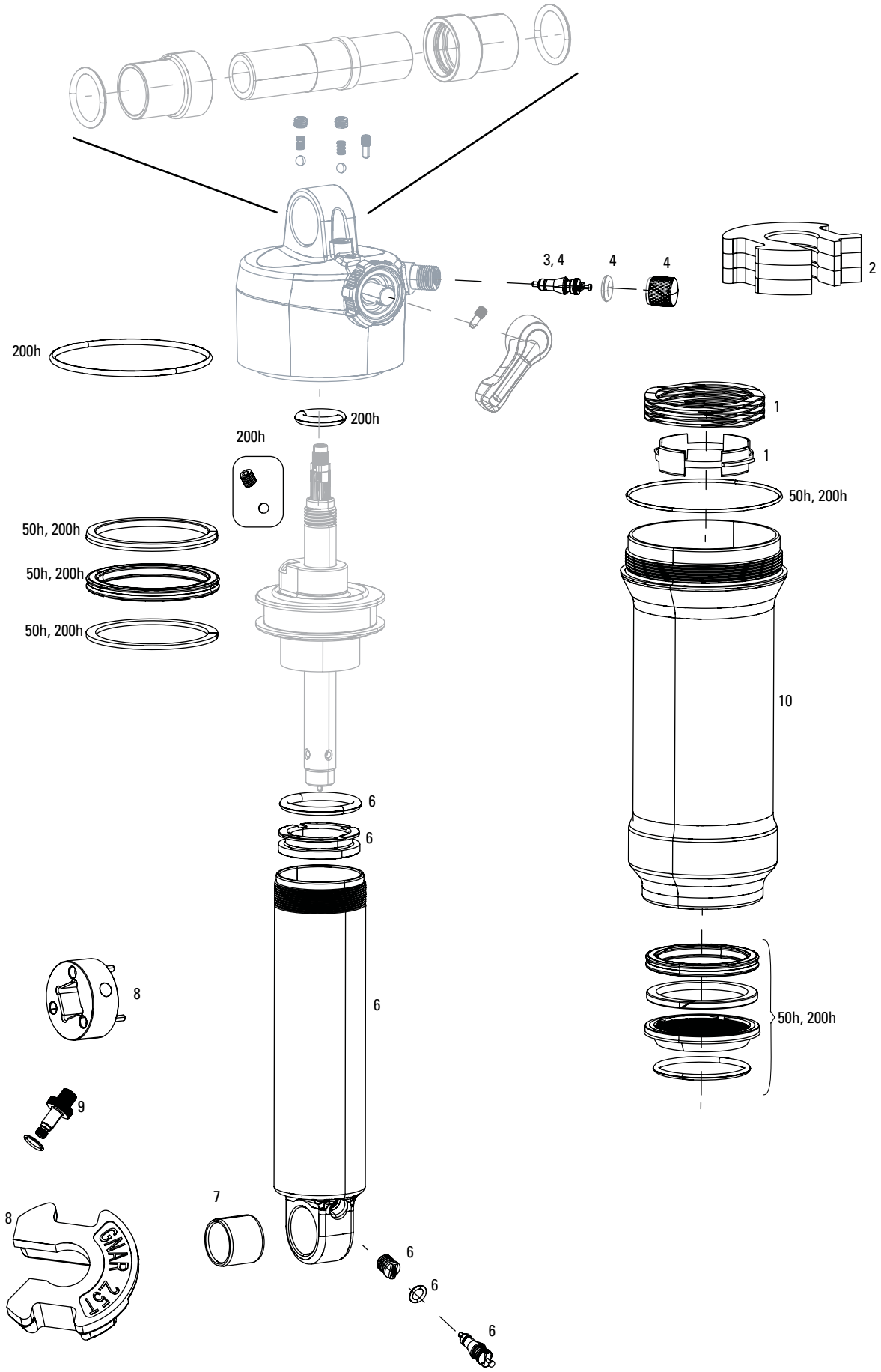

DELUXE TREK Re:AKTIV A1 (2017-2019)

	SERVICE	
50h	00.4315.032.615	50 HOUR SERVICE KIT (INCLUDES AIR CAN SEALS, PISTON SEAL, GLIDE RINGS, SEAL GREASE/OIL) - DELUXE/SUPER DELUXE A1-B2 (2017-2020)
200h	00.4318.037.001	200 HOUR/1 YEAR SERVICE KIT (INCLUDES AIR CAN SEALS, PISTON SEAL, GLIDE RINGS, IFP SEALS, REMOTE SPARES, SEAL GREASE/OIL) - DELUXE/DELUXE RMT A1-B2 (2017-2020)/DELUXE NUDE B1+
	SPARES	
1	11.4118.055.000	REAR SHOCK COUNTER MEASURE KIT - (INCLUDES SPRING & CARRIER) DELUXE A1/ SUPER DELUXE A1(2017+)
2	11.4118.042.001	REAR SHOCK VOLUME REDUCER KIT - TOKEN 1T/4.7MM (INCLUDES 3 TOKENS) - SUPER DELUXE/ DELUXE (2017+)
3	11.4308.327.002	AIR VALVE KIT - SCHRADER CORE (QTY 2) - FORKS/SHOCKS/REVERB
4	11.4115.124.010	REAR SHOCK AIR VALVE KIT - (INCLUDES VALVE BODY, VALVE, VALVE CAP) - MONARCH/MONARCH PLUS
5	11.4115.107.080	
6	11.4118.048.026	REAR SHOCK DAMPER BODY/IFP - STANDARD EYELET 50MM(INCLUDES DAMPER BODY, IFP, VALVE CORE & CAPS) - DELUXE A1/ SUPER DELUXE A1 TREK (2017-2020)
7	11.4115.013.000	REAR SHOCK EYELET BUSHING KIT -1/2"X1/2" (QTY 2)
8	11.4118.051.002	REAR SHOCK VOLUME REDUCER KIT - GNAR DOG 2.5T/15MM, GREEN (INCLUDES GNAR DOG TOKEN EQUAL TO 2.5 TOKENS) - SUPER DELUXE/DELUXE (2017+)
10	11.4118.059.000	REAR SHOCK AIR CAN ASSEMBLY - DEBONAIR V2 BLACK 165/190X37.5-45MM (INCLUDES DECALS) - DELUXE/SUPER DELUXE (2017+)
10	11.4118.059.001	REAR SHOCK AIR CAN ASSEMBLY - DEBONAIR V2 BLACK 185/210X47.5-55MM (INCLUDES DECALS) - DELUXE/SUPER DELUXE (2017+)
10	11.4118.059.002	REAR SHOCK AIR CAN ASSEMBLY - DEBONAIR V2 BLACK 205/230X57.5-65MM (INCLUDES DECALS) - DELUXE/SUPER DELUXE (2017+)
10	11.4118.059.003	REAR SHOCK AIR CAN ASSEMBLY - DEBONAIR V2 BLACK 225/250X67.5-75MM (INCLUDES DECALS) - DELUXE/SUPER DELUXE (2017+)
ns	00.4118.159.021	REAR SHOCK MOUNTING HARDWARE METRIC 8X50MM 3-PIECE (1 SET) OFF SET - TREK ALUMINUM
ns	00.4118.159.022	REAR SHOCK MOUNTING HARDWARE METRIC 10X50MM 3-PIECE (1 SET)OFF SET - TREK CARBON
	TOOLS/GREASE/FLUIDS	
ns	00.4318.041.001	REAR SHOCK IFP PULLER (FOR REMOVING IFP) - SUPERDELUXE/SUPERDELUXE COIL/THRU SHAFT
8	00.4318.012.004	REAR SHOCK RE:AKTIV PISTON SOCKET (REQUIRED FOR REAKTIV 200 HOUR SERVICE) - DELUXE
ns	11.4115.094.010	LUBRICANT, REAR SHOCK AIR CAN, MAXIMA 15W 50, 1 LITER BOTTLE
ns	00.4318.008.002	GREASE ROCKSHOX DYNAMIC SEAL GREASE (PTFE) 1OZ - RECOMMENDED FOR SERVICING REAR SHOCKS & FORKS
ns	00.4318.008.004	GREASE ROCKSHOX DYNAMIC SEAL GREASE 500ML - RECOMMENDED FOR SERVICING REAR SHOCKS & FORKS
ns	11.4115.094.040	MAXIMA SUSPENSION OIL PLUSH, 7WT 1 LITER BOTTLE - REAR SHOCK
ns	11.4315.021.060	ROCKSHOX SUSPENSION OIL, 7WT 120ML BOTTLE - REAR SHOCK DAMPER
9	00.4315.027.010	REAR SHOCK AIR VALVE ADAPTER TOOL - REAR SHOCKS
ns	00.4315.023.010	HIGH-PRESSURE FORK/SHOCK PUMP (300 PSI MAX) ROCKSHOX
ns	00.4315.023.040	HIGH-PRESSURE FORK/SHOCK PUMP (300 PSI MAX) ROCKSHOX DIGITALGAUGE
ns	00.4315.022.010	REAR SHOCK SCHRADER VALVE REMOVAL TOOL ROCKSHOX

DELUXE TREK Re:AKTIV THRUSHAFT A1 (2018-2019)

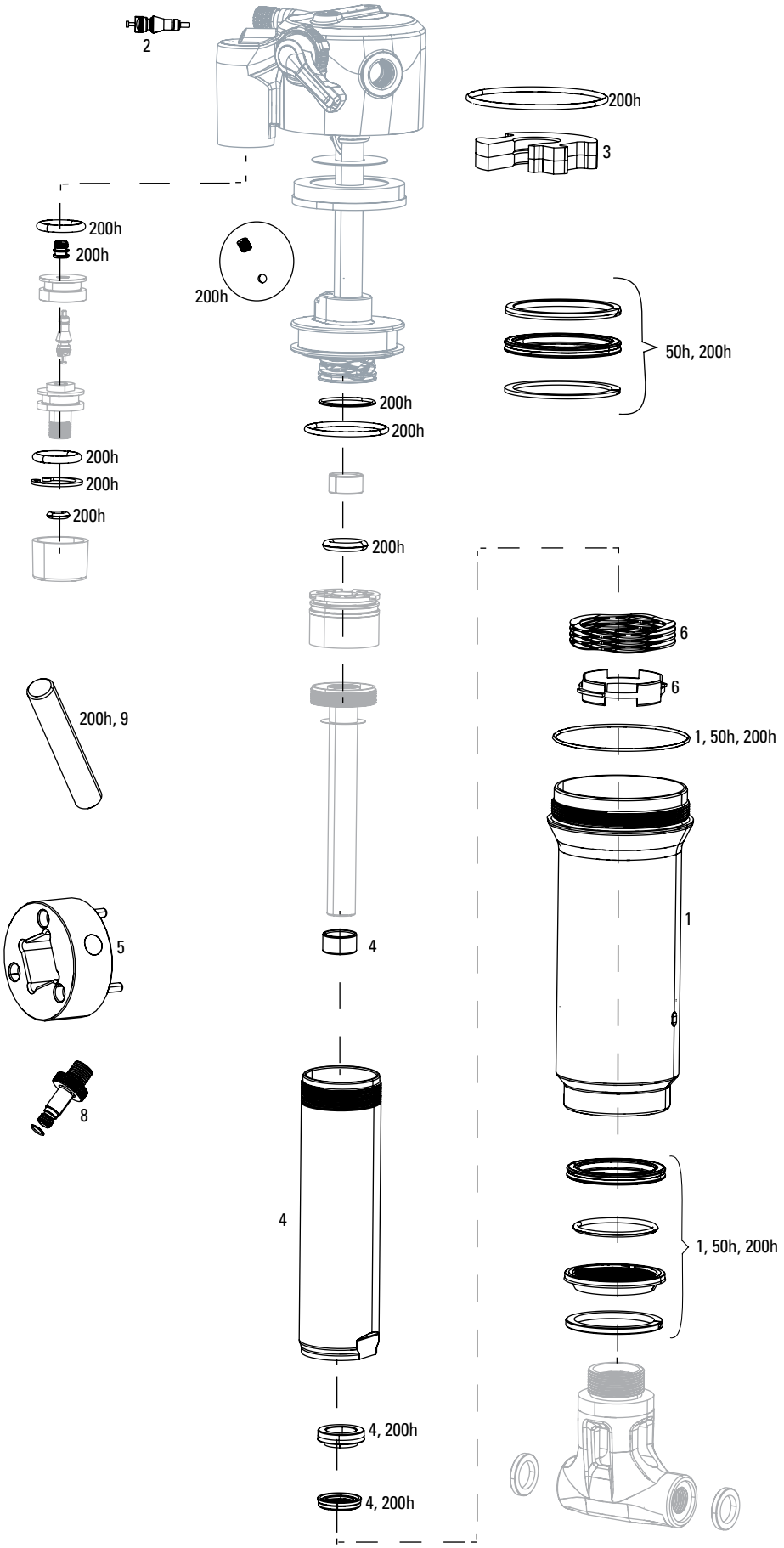

DELUXE TREK Re:AKTIV THRUSHAFT A1 (2018-2019)

	SERVICE	
50h	00.4315.032.615	50 HOUR SERVICE KIT (INCLUDES AIR CAN SEALS, PISTON SEAL, GLIDE RINGS, SEAL GREASE/OIL) - DELUXE/SUPER DELUXE A1-B2 (2017-2020)
200h	00.4118.238.000	200 HOUR/1 YEAR SERVICE KIT (INCLUDES AIR CAN SEALS, PISTON SEAL, GLIDE RINGS, IFP SEALS, REMOTE SPARES, SEAL GREASE/OIL) - DELUXE/DELUXE RMT A1-B2 (2017-2020)/DELUXE NUDE B1+
	AIR CAN	
1	11.4118.059.002	REAR SHOCK AIR CAN ASSEMBLY - DEBONAIR V2 BLACK 205/230X57.5-65MM (INCLUDES DECALS) - DELUXE/SUPER DELUXE (2017+)
2	11.4308.327.002	AIR VALVE KIT - SCHRADER CORE (QTY 2) - FORKS/SHOCKS/REVERB
3	11.4118.042.001	REAR SHOCK VOLUME REDUCER KIT - TOKEN 1T/4.7MM (INCLUDES 3 TOKENS) - SUPER DELUXE/ DELUXE (2017+)
	DAMPER	
4	11.4118.054.000	REAR SHOCK DAMPER BODY - THRUSHAFT (INCLUDES DAMPER BODY, BUSHING & SEALS) - THRUSHAFT DELUXE A1 (2017-2020)
6	11.4118.055.000	REAR SHOCK COUNTER MEASURE KIT - (INCLUDES SPRING & CARRIER) DELUXE A1/ SUPER DELUXE A1(2017+)
5	00.4318.012.004	REAR SHOCK RE:AKTIV PISTON SOCKET (REQUIRED FOR REAKTIV 200 HOUR SERVICE) - DELUXE
ns	11.4115.094.010	LUBRICANT, REAR SHOCK AIR CAN, MAXIMA 15W 50, 1 LITER BOTTLE
ns	00.4318.008.002	GREASE ROCKSHOX DYNAMIC SEAL GREASE (PTFE) 1OZ - RECOMMENDED FOR SERVICING REAR SHOCKS & FORKS
ns	00.4318.008.004	GREASE ROCKSHOX DYNAMIC SEAL GREASE 500ML - RECOMMENDED FOR SERVICING REAR SHOCKS & FORKS
ns	11.4115.094.040	MAXIMA SUSPENSION OIL PLUSH, 7WT 1 LITER BOTTLE - REAR SHOCK
8	00.4315.027.010	REAR SHOCK AIR VALVE ADAPTER TOOL - REAR SHOCKS
ns	00.4315.023.010	HIGH-PRESSURE FORK/SHOCK PUMP (300 PSI MAX) ROCKSHOX
ns	00.4315.023.040	HIGH-PRESSURE FORK/SHOCK PUMP (300 PSI MAX) ROCKSHOX DIGITALGAUGE
ns	00.4315.022.010	REAR SHOCK SCHRADER VALVE REMOVAL TOOL ROCKSHOX
9	00.4318.012.007	REAR SHOCK THRU SHAFT BLEED PLUG (REQUIRED FOR THRU SHAFT 200 HOUR SERVICE) - RE:AKTIV THRU SHAFT SHOCKS

SUPER DELUXE THRUSHAFT C1 (2021)

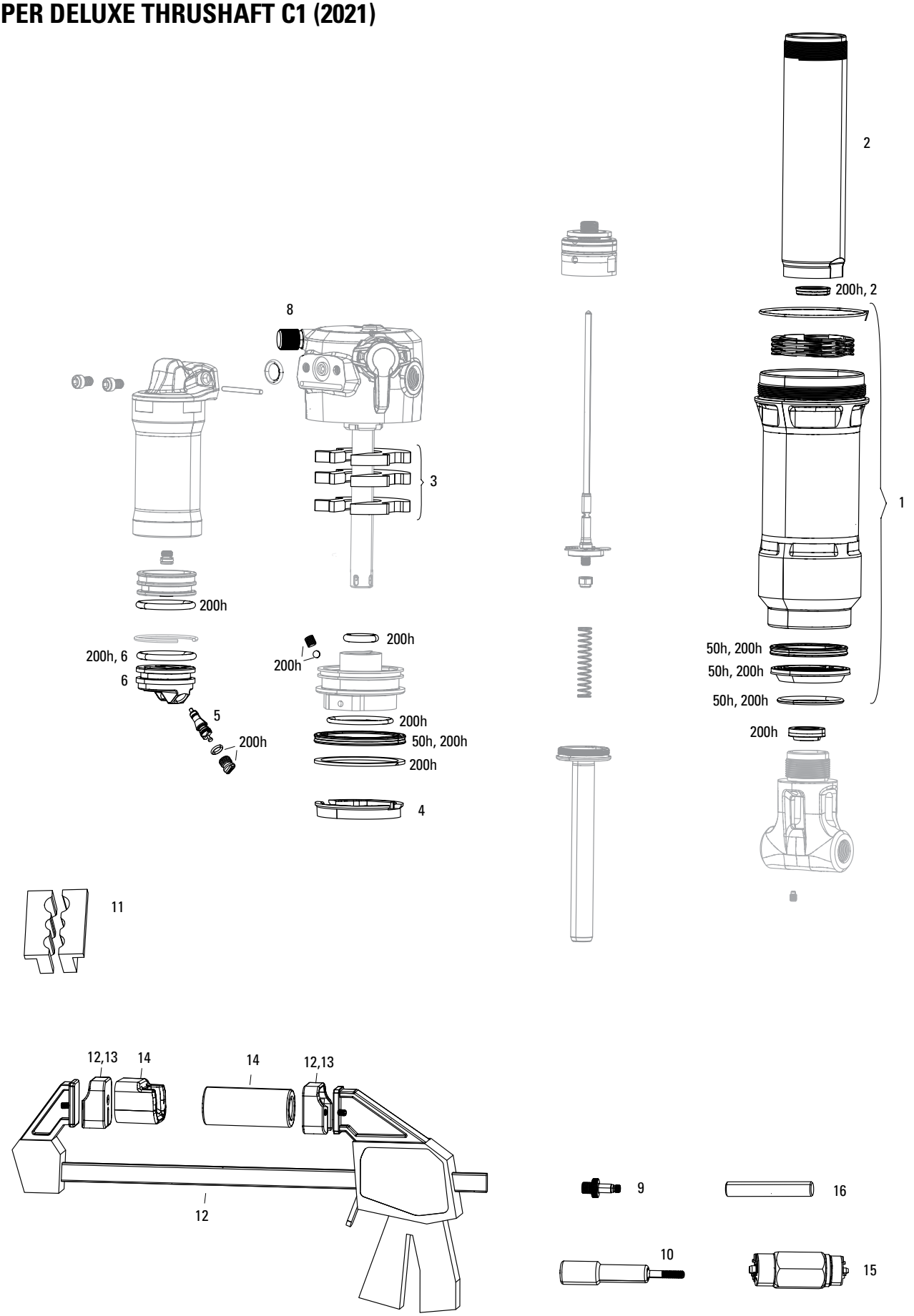

Note:
1. Super Deluxe Thrushaft C1 is not compatible with red volume reducers for Super Deluxe A1-B2 . Use only purple volume reducers.

SUPER DELUXE THRUSHAFT C1 (2021)

	SERVICE	
50h	00.4318.037.003	50 HOUR SERVICE KIT (INCLUDES AIR CAN SEALS, PISTON SEAL, GLIDE RINGS, SEAL GREASE/OIL) - SUPER DELUXE THRUSHAFT C1 - TREK (2021)
200h	00.4318.037.004	200 HOUR/1 YEAR SERVICE KIT (INCLUDES AIR CAN SEALS, PISTON SEAL, GLIDE RINGS, IFP SEALS, SEAL GREASE/OIL) - SUPER DELUXE THRUSHAFT C1 - TREK (2021)
	AIR CAN	
1	11.4118.059.010	REAR SHOCK AIR CAN ASSEMBLY - PROGRESSIVE 57.5-65MM (INCLUDES DECALS) - TREK SUPER DELUXE THRUSHAFT C1 (2021+)
1	11.4118.059.011	REAR SHOCK AIR CAN ASSEMBLY - LINEAR 57.5-65MM (INCLUDES DECALS) - TREK SUPER DELUXE THRUSHAFT C1 (2021+)
	DAMPER	
2	11.4118.054.001	REAR SHOCK DAMPER BODY - THRUSHAFT 57.5mm (INCLUDES DAMPER BODY, BUSHING & SEALS) - SUPER DELUXE THRUSHAFT C1 (2021)
2	11.4118.054.002	REAR SHOCK DAMPER BODY - THRUSHAFT 62.5mm (INCLUDES DAMPER BODY, BUSHING & SEALS) - SUPER DELUXE THRUSHAFT C1 (2021)
	SPARES	
3	11.4118.051.005	REAR SHOCK VOLUME REDUCER KIT - (INCLUDES 3 POSITIVE TOKENS) - SUPER DELUXE THRUSHAFT C1 (2021)
4	11.4118.051.006	REAR SHOCK VOLUME REDUCER KIT - (INCLUDES 1 NEGATIVE TOKEN) - SUPER DELUXE THRUSHAFT C1 (2021)
5	11.4308.327.002	AIR VALVE KIT - SCHRADER CORE (QTY 2) - FORKS/SHOCKS/REVERB
6	11.4118.057.000	REAR SHOCK RESERVOIR CAP - SUPER DELUXE AIR/COIL R/RC/RCR/RCT/RC3/RT
7	11.4118.055.000	REAR SHOCK COUNTER MEASURE KIT - (INCLUDES SPRING & CARRIER) DELUXE A1/ SUPER DELUXE A1(2017+)
8	11.4118.057.000	REAR SHOCK RESERVOIR CAP - SUPER DELUXE AIR/COIL R/RC/RCR/RCT/RC3/RT
	TOOLS/GREASE/FLUIDS	
ns	11.4115.094.010	LUBRICANT, REAR SHOCK AIR CAN, MAXIMA 15W 50, 1 LITER BOTTLE
ns	00.4318.008.002	GREASE ROCKSHOX DYNAMIC SEAL GREASE (PTFE) 1OZ - RECOMMENDED FOR SERVICING REAR SHOCKS & FORKS
ns	00.4318.008.004	GREASE ROCKSHOX DYNAMIC SEAL GREASE 500ML - RECOMMENDED FOR SERVICING REAR SHOCKS & FORKS
ns	11.4115.094.040	MAXIMA SUSPENSION OIL PLUSH, 7WT 1 LITER BOTTLE - REAR SHOCK
9	00.4315.027.010	REAR SHOCK AIR VALVE ADAPTER TOOL - REAR SHOCKS
10	00.4318.041.001	REAR SHOCK IFP PULLER (FOR REMOVING IFP) - SUPERDELUXE/SUPERDELUXE COIL/THRU SHAFT
11	00.4115.154.020	REAR SHOCK VISE BLOCKS, 3 HOLE FOR ROCKSHOX MONARCH/VIVID/VIVID AIR/REVERB
12	00.4318.056.000	REAR SHOCK ROCKSHOX CLAMP TOOL (FOR DAMPER SERVICE, USE WITH MODEL SPECIFIC TIPS)
13	00.4318.056.001	REAR SHOCK ROCKSHOX CLAMP ADAPTERS (CONNECTS REAR SHOCK TOOLS TO CLAMPS)
14	00.4318.056.002	REAR SHOCK ROCKSHOX CLAMP TIPS 26MM (FOR DAMPER SERVICE) - SUPER DELUXE A1-B2(2017-2021)/THRUSHAFT C1+(2021+)
15	00.4318.034.000	REAR SHOCK LOCK PISTON TOOL (USED TO REMOVE LOCKOUT PISTON) - DELUXE RCT/DELUXE NUDE/THRU-SHAFT C1
ns	00.4315.023.010	HIGH-PRESSURE FORK/SHOCK PUMP (300 PSI MAX) ROCKSHOX
ns	00.4315.023.040	HIGH-PRESSURE FORK/SHOCK PUMP (300 PSI MAX) ROCKSHOX DIGITALGAUGE
ns	00.4315.022.010	REAR SHOCK SCHRADER VALVE REMOVAL TOOL ROCKSHOX
16	00.4318.012.007	REAR SHOCK THRU SHAFT BLEED PLUG (REQUIRED FOR THRU SHAFT 200 HOUR SERVICE) - RE:AKTIV THRU SHAFT SHOCKS

SUPER DELUXE A1-B2 (2018-2020)

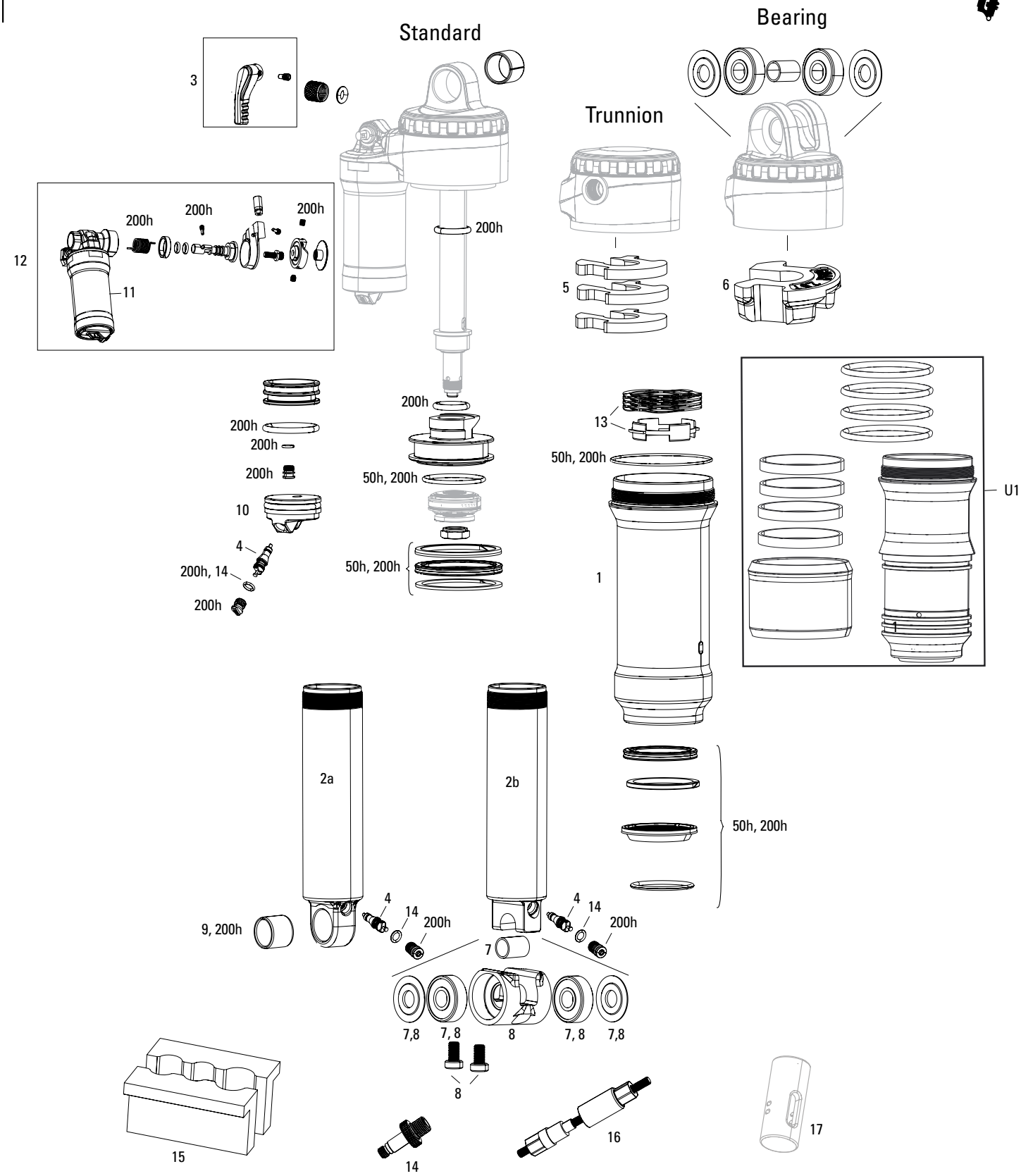

SUPER DELUXE A1-B2 (2018-2020)

	UPGRADE	
U1	00.4318.028.000	AIR CAN UPGRADE KIT - MEGNEG 185/210X47.5-55MM (INCLUDES AIR CAN,NEG VOLUME SPACERS, SEALS, GREASE, OIL & DECALS) - DELUXE/SUPER DELUXE SHOCKS
U1	00.4318.028.001	AIR CAN UPGRADE KIT - MEGNEG 205/230X57.5-65MM (INCLUDES AIR CAN,NEG VOLUME SPACERS, SEALS, GREASE, OIL & DECALS) - DELUXE/SUPER DELUXE SHOCKS
U1	00.4318.028.002	AIR CAN UPGRADE KIT - MEGNEG 225/250X67.5-75MM (INCLUDES AIR CAN,NEG VOLUME SPACERS, SEALS, GREASE, OIL & DECALS) - DELUXE/SUPER DELUXE SHOCKS
	SERVICE	
50h	00.4315.032.615	50 HOUR SERVICE KIT (INCLUDES AIR CAN SEALS, PISTON SEAL, GLIDE RINGS, SEAL GREASE/OIL) - DELUXE/SUPER DELUXE A1-B2 (2017-2020)
200h	00.4315.032.617	200 HOUR/1 YEAR SERVICE KIT (INCLUDES AIR CAN SEALS, PISTON SEAL, GLIDE RINGS, IFP SEALS, RESERVOIR SEALS, SEAL GREASE/OIL) - SUPER DELUXE A1-B2 (2017-2020)
200h	00.4315.032.637	200 HOUR/1 YEAR SERVICE KIT (INCLUDES AIR CAN SEALS, PISTON SEAL, GLIDE RINGS, IFP SEALS, REMOTE SPARES) - SUPER DELUXE REMOTE A1-B2 (2018-2020)
	AIR CAN	
1	11.4118.033.034	REAR SHOCK AIR CAN ASSEMBLY - SOLO AIR 165/190X37.5-45 (INCLUDES DECALS, SEALS, 15W50 & DYNAMIC SEAL GREASE) - DELUXE/SUPER DELUXE (2017+)
1	11.4118.033.035	REAR SHOCK AIR CAN ASSEMBLY - SOLO AIR 185/210X47.5-55 (INCLUDES DECALS, SEALS, 15W50 & DYNAMIC SEAL GREASE) - DELUXE/SUPER DELUXE (2017+)
1	11.4118.033.036	REAR SHOCK AIR CAN ASSEMBLY - SOLO AIR 205/230X57.5-65 (INCLUDES DECALS, SEALS, 15W50 & DYNAMIC SEAL GREASE) - DELUXE/SUPER DELUXE (2017+)
1	11.4118.059.000	REAR SHOCK AIR CAN ASSEMBLY - DEBONAIR V2 BLACK 165/190X37.5-45MM (INCLUDES DECALS) - DELUXE/SUPER DELUXE (2017+)
1	11.4118.059.001	REAR SHOCK AIR CAN ASSEMBLY - DEBONAIR V2 BLACK 185/210X47.5-55MM (INCLUDES DECALS) - DELUXE/SUPER DELUXE (2017+)
1	11.4118.059.002	REAR SHOCK AIR CAN ASSEMBLY - DEBONAIR V2 BLACK 205/230X57.5-65MM (INCLUDES DECALS) - DELUXE/SUPER DELUXE (2017+)
1	11.4118.059.003	REAR SHOCK AIR CAN ASSEMBLY - DEBONAIR V2 BLACK 225/250X67.5-75MM (INCLUDES DECALS) - DELUXE/SUPER DELUXE (2017+)
	DAMPER	
2a	11.4118.048.001	REAR SHOCK DAMPER BODY/IFP - STANDARD EYELET 37.5MM (INCLUDES DAMPER BODY, IFP, VALVE CORE, 7.5MM TRAVEL SPACER & CAPS) - DELUXE/SUPER DELUXE A1-B2 (2017-2020)
2a	11.4118.048.002	REAR SHOCK DAMPER BODY/IFP - STANDARD EYELET 40MM(INCLUDES DAMPER BODY, IFP, VALVE CORE, 5MM TRAVEL SPACER & CAPS) - DELUXE/SUPER DELUXE A1-B2 (2017-2020)
2a	11.4118.048.003	REAR SHOCK DAMPER BODY/IFP - STANDARD EYELET 42.5MM (INCLUDES DAMPER BODY, IFP, VALVE CORE, 2.5MM TRAVEL SPACER & CAPS) - DELUXE/SUPER DELUXE A1-B2 (2017-2020)
2a	11.4118.048.004	REAR SHOCK DAMPER BODY/IFP - STANDARD EYELET 45MM(INCLUDES DAMPER BODY, IFP, VALVE CORE & CAPS) - DELUXE/SUPER DELUXE A1-B2 (2017-2020)
2a	11.4118.048.005	REAR SHOCK DAMPER BODY/IFP - STANDARD EYELET 47.5MM (INCLUDES DAMPER BODY, IFP, VALVE CORE, 7.5MM TRAVEL SPACER & CAPS) - DELUXE/SUPER DELUXE A1-B2 (2017-2020)
2a	11.4118.048.006	REAR SHOCK DAMPER BODY/IFP - STANDARD EYELET 50MM(INCLUDES DAMPER BODY, IFP, VALVE CORE, 5MM TRAVEL SPACER & CAPS) - DELUXE/SUPER DELUXE A1-B2 (2017-2020)
2a	11.4118.048.007	REAR SHOCK DAMPER BODY/IFP - STANDARD EYELET 52.5MM (INCLUDES DAMPER BODY, IFP, VALVE CORE, 2.5MM TRAVEL SPACER & CAPS) - DELUXE/SUPER DELUXE A1-B2 (2017-2020)
2a	11.4118.048.008	REAR SHOCK DAMPER BODY/IFP - STANDARD EYELET 55MM(INCLUDES DAMPER BODY, IFP, VALVE CORE & CAPS) - DELUXE/SUPER DELUXE A1-B2 (2017-2020)
2a	11.4118.048.009	REAR SHOCK DAMPER BODY/IFP - STANDARD EYELET 57.5MM (INCLUDES DAMPER BODY, IFP, VALVE CORE, 7.5MM TRAVEL SPACER & CAPS) - DELUXE/SUPER DELUXE A1-B2 (2017-2020)
2a	11.4118.048.010	REAR SHOCK DAMPER BODY/IFP - STANDARD EYELET 60MM(INCLUDES DAMPER BODY, IFP, VALVE CORE, 5MM TRAVEL SPACER & CAPS) - DELUXE/SUPER DELUXE A1-B2 (2017-2020)
2a	11.4118.048.011	REAR SHOCK DAMPER BODY/IFP - STANDARD EYELET 62.5MM (INCLUDES DAMPER BODY, IFP, VALVE CORE, 2.5MM TRAVEL SPACER & CAPS) - DELUXE/SUPER DELUXE A1-B2 (2017-2020)
2a	11.4118.048.012	REAR SHOCK DAMPER BODY/IFP - STANDARD EYELET 65MM(INCLUDES DAMPER BODY, IFP, VALVE CORE & CAPS) - DELUXE/SUPER DELUXE A1-B2 (2017-2020)
2a	11.4118.048.026	REAR SHOCK DAMPER BODY/IFP - STANDARD EYELET 50MM(INCLUDES DAMPER BODY, IFP, VALVE CORE & CAPS) - DELUXE A1/ SUPER DELUXE A1 TREK (2017-2020)
2a	11.4118.048.027	REAR SHOCK DAMPER BODY/IFP - STANDARD EYELET 67.5MM (INCLUDES DAMPER BODY, IFP, VALVE CORE, 7.5 TRAVEL SPACER& CAPS) - DELUXE/SUPER DELUXE A1-B2 (2017-2020)
2a	11.4118.048.028	REAR SHOCK DAMPER BODY/IFP - STANDARD EYELET 70MM(INCLUDES DAMPER BODY, IFP, VALVE CORE, 5 TRAVEL SPACER &CAPS) -DELUXE/SUPER DELUXE A1-B2 (2017-2020)
2a	11.4118.048.029	REAR SHOCK DAMPER BODY/IFP - STANDARD EYELET 72.5MM (INCLUDES DAMPER BODY, IFP, VALVE CORE, 2.5 TRAVEL SPACER& CAPS) - DELUXE/SUPER DELUXE A1-B2 (2017-2020)
2a	11.4118.048.030	REAR SHOCK DAMPER BODY/IFP - STANDARD EYELET 75MM(INCLUDES DAMPER BODY, IFP, VALVE CORE & CAPS) - DELUXE/SUPER DELUXE A1-B2 (2017-2020)
2b	11.4118.048.014	REAR SHOCK DAMPER BODY/IFP - BEARING EYELET 37.5MM (INCLUDES DAMPER BODY, IFP, VALVE CORE, 7.5MM TRAVEL SPACER & CAPS) - DELUXE/SUPER DELUXE A1-B2 (2017-2020)
2b	11.4118.048.015	REAR SHOCK DAMPER BODY/IFP - BEARING EYELET 40MM(INCLUDES DAMPER BODY, IFP, VALVE CORE, 5MM TRAVEL SPACER & CAPS) - DELUXE/SUPER DELUXE A1-B2 (2017-2020)
2b	11.4118.048.016	REAR SHOCK DAMPER BODY/IFP - BEARING EYELET 42.5MM (INCLUDES DAMPER BODY, IFP, VALVE CORE, 2.5MM TRAVEL SPACER & CAPS) - DELUXE/SUPER DELUXE A1-B2 (2017-2020)
2b	11.4118.048.017	REAR SHOCK DAMPER BODY/IFP - BEARING EYELET 45MM(INCLUDES DAMPER BODY, IFP, VALVE CORE & CAPS) - DELUXE/SUPER DELUXE A1-B2 (2017-2020)
2b	11.4118.048.018	REAR SHOCK DAMPER BODY/IFP - BEARING EYELET 47.5MM (INCLUDES DAMPER BODY, IFP, VALVE CORE, 7.5MM TRAVEL SPACER & CAPS) - DELUXE/SUPER DELUXE A1-B2 (2017-2020)
2b	11.4118.048.019	REAR SHOCK DAMPER BODY/IFP - BEARING EYELET 50MM(INCLUDES DAMPER BODY, IFP, VALVE CORE, 5MM TRAVEL SPACER & CAPS) - DELUXE/SUPER DELUXE A1-B2 (2017-2020)
2b	11.4118.048.020	REAR SHOCK DAMPER BODY/IFP - BEARING EYELET 52.5MM (INCLUDES DAMPER BODY, IFP, VALVE CORE, 2.5MM TRAVEL SPACER & CAPS) - DELUXE/SUPER DELUXE A1-B2 (2017-2020)
2b	11.4118.048.021	REAR SHOCK DAMPER BODY/IFP - BEARING EYELET 55MM(INCLUDES DAMPER BODY, IFP, VALVE CORE & CAPS) - DELUXE/SUPER DELUXE A1-B2 (2017-2020)
2b	11.4118.048.022	REAR SHOCK DAMPER BODY/IFP - BEARING EYELET 57.5MM (INCLUDES DAMPER BODY, IFP, VALVE CORE, 7.5MM TRAVEL SPACER & CAPS) - DELUXE/SUPER DELUXE A1-B2 (2017-2020)
2b	11.4118.048.023	REAR SHOCK DAMPER BODY/IFP - BEARING EYELET 60MM(INCLUDES DAMPER BODY, IFP, VALVE CORE, 5MM TRAVEL SPACER & CAPS) - DELUXE/SUPER DELUXE A1-B2 (2017-2020)
2b	11.4118.048.024	REAR SHOCK DAMPER BODY/IFP - BEARING EYELET 62.5MM (INCLUDES DAMPER BODY, IFP, VALVE CORE, 2.5MM TRAVEL SPACER & CAPS) - DELUXE/SUPER DELUXE A1-B2 (2017-2020)
2b	11.4118.048.025	REAR SHOCK DAMPER BODY/IFP - BEARING EYELET 65MM(INCLUDES DAMPER BODY, IFP, VALVE CORE & CAPS) - DELUXE/SUPER DELUXE A1-B2 (2017-2020)
2b	11.4118.048.031	REAR SHOCK DAMPER BODY/IFP - BEARING EYELET 67.5MM (INCLUDES DAMPER BODY, IFP, VALVE CORE,7.5 TRAVEL SPACER & CAPS) - DELUXE/SUPER DELUXE A1-B2 (2017-2020)
2b	11.4118.048.032	REAR SHOCK DAMPER BODY/IFP - BEARING EYELET 70MM(INCLUDES DAMPER BODY, IFP, VALVE CORE, 5 TRAVEL SPACER &CAPS) - DELUXE/SUPER DELUXE A1-B2 (2017-2020)
2b	11.4118.048.033	REAR SHOCK DAMPER BODY/IFP - BEARING EYELET 72.5MM (INCLUDES DAMPER BODY, IFP, VALVE CORE, 2.5 TRAVEL SPACER& CAPS) - DELUXE/SUPER DELUXE A1-B2 (2017-2020)
2b	11.4118.048.034	REAR SHOCK DAMPER BODY/IFP - BEARING EYELET 75MM(INCLUDES DAMPER BODY, IFP, VALVE CORE & CAPS) - DELUXE/SUPER DELUXE A1-B2 (2017-2020)
	SPARES	
3	11.4115.107.070	REAR SHOCK COMPRESSION KNOB KIT - SUPER DELUXE A1-B2 (2017-2020)
4	11.4308.327.002	AIR VALVE KIT - SCHRADER CORE (QTY 2) - FORKS/SHOCKS/REVERB
5	11.4118.042.001	REAR SHOCK VOLUME REDUCER KIT - TOKEN 1T/4.7mm (INCLUDES 3 TOKENS) - SUPER DELUXE/DELUXE A1-B2 (2017-2021)
6	11.4118.051.002	REAR SHOCK VOLUME REDUCER KIT - GNAR DOG 2.5T/15MM, GREEN (INCLUDES GNAR DOG TOKEN EQUAL TO 2.5 TOKENS) - SUPER DELUXE/DELUXE A1-B2 (2017-2021)
7	11.4118.046.000	REAR SHOCK EYELET BEARING KIT - WITH SPACERS (INCLUDES BEARINGS & SPACERS FOR BR EYELETS) - DELUXE/SUPER DELUXE BR (2017+)
8	11.4118.049.000	REAR SHOCK EYELET BEARING KIT - (INCLUDES EYELET BEARING BRACKET, BEARING, BOLTS & SPACERS FOR BR EYELETS) - DELUXE/SUPER DELUXE BR (2017+)
9	11.4115.013.000	REAR SHOCK EYELET BUSHING KIT -1/2"X1/2" (QTY 2)
10	11.4118.057.000	REAR SHOCK RESERVOIR CAP - SUPER DELUXE AIR/COIL R/RC/RCR/RCT/RC3/RT
11	11.4118.057.001	REAR SHOCK RESERVOIR - 62MM -SUPER DELUXE AIR/COIL R/RC3/RCR (37.5-65)
11	11.4118.057.002	REAR SHOCK RESERVOIR - 68MM -SUPER DELUXE AIR/COIL R/RC3/RCR(67.5-75), RCT/RC(37.5-65)
11	11.4118.057.003	REAR SHOCK RESERVOIR - 74MM -SUPER DELUXE AIR/COIL RCT/RC(67.5-75)
12	11.4118.057.004	REAR SHOCK RESERVOIR ASSEMBLY - 62MM, SOFT PEDAL, 380 LOCK (INCLUDES RESERVOIR, INTERNALS& LEVER) -SUPER DELUXE AIR/COIL RC3 A1+ (37.5-65)
12	11.4118.057.005	REAR SHOCK RESERVOIR ASSEMBLY - 68MM, SOFT PEDAL, 380 LOCK (INCLUDES RESERVOIR, INTERNALS& LEVER) -SUPER DELUXE AIR/COIL RC3 A1+ (67.5-75)
12	11.4118.057.006	REAR SHOCK RESERVOIR ASSEMBLY - 62MM, 380 LOCK (INCLUDES RESERVOIR, INTERNALS & REMOTE SPOOL) - SUPER DELUXE AIR/COIL RCR/RTR A1+ (37.5-65)
12	11.4118.057.007	REAR SHOCK RESERVOIR ASSEMBLY - 68MM, 380 LOCK (INCLUDES RESERVOIR, INTERNALS & REMOTE SPOOL) - SUPER DELUXE AIR/COIL RCR/RTR A1+ (67.5-75)
12	11.4118.057.008	REAR SHOCK RESERVOIR ASSEMBLY - 68MM, 380 LOCK (INCLUDES RESERVOIR, INTERNALS& LEVER) -SUPER DELUXE AIR/COIL RCT A1+ (37.5-65)
12	11.4118.057.009	REAR SHOCK RESERVOIR ASSEMBLY - 74MM, 380 LOCK (INCLUDES RESERVOIR, INTERNALS& LEVER) -SUPER DELUXE AIR/COIL RCT A1+ (67.5-75)
12	11.4118.057.010	REAR SHOCK RESERVOIR ASSEMBLY - 68MM, (INCLUDES RESERVOIR, INTERNALS & LEVER) -SUPER DELUXE AIR/COIL RC A1+ (37.5-65)
12	11.4118.057.011	REAR SHOCK RESERVOIR ASSEMBLY - 74MM, (INCLUDES RESERVOIR, INTERNALS & LEVER) -SUPER DELUXE AIR/COIL RC A1+ (67.5-75)
13	11.4118.055.000	REAR SHOCK COUNTER MEASURE KIT - (INCLUDES SPRING & CARRIER) DELUXE A1/ SUPER DELUXE A1(2017+)
ns	11.4118.085.001	REAR SHOCK DAMPER SHAFT PISTON - (INLCUDES GLIDE RING AND O-RING) - SUPER DELUXE AIR B1-B2 (2018-2020), HOT DOG
	TOOLS/GREASE/FLUIDS	
ns	11.4115.094.010	LUBRICANT, REAR SHOCK AIR CAN, MAXIMA 15W 50, 1 LITER BOTTLE
ns	00.4318.008.002	GREASE ROCKSHOX DYNAMIC SEAL GREASE (PTFE) 1OZ - RECOMMENDED FOR SERVICING REAR SHOCKS & FORKS
ns	00.4318.008.004	GREASE ROCKSHOX DYNAMIC SEAL GREASE 500ML - RECOMMENDED FOR SERVICING REAR SHOCKS & FORKS
ns	11.4115.094.040	MAXIMA SUSPENSION OIL PLUSH, 7WT 1 LITER BOTTLE - REAR SHOCK
14	00.4315.027.010	REAR SHOCK AIR VALVE ADAPTER TOOL - REAR SHOCKS
15	00.4115.154.020	REAR SHOCK VISE BLOCKS, 3 HOLE FOR ROCKSHOX MONARCH/VIVID/VIVID AIR/REVERB
16	00.4315.026.010	REAR SHOCK 1/2"X1/2" BUSHING TOOL (EYELET/SEALHEAD) ROCKSHOX
ns	00.4315.023.010	HIGH-PRESSURE FORK/SHOCK PUMP (300 PSI MAX) ROCKSHOX
ns	00.4315.023.030	HIGH-PRESSURE FORK/SHOCK PUMP (600 PSI MAX) ROCKSHOX
ns	00.4315.023.040	HIGH-PRESSURE FORK/SHOCK PUMP (300 PSI MAX) ROCKSHOX DIGITALGAUGE
ns	00.4315.022.010	REAR SHOCK SCHRADER VALVE REMOVAL TOOL ROCKSHOX
17	00.4318.012.009	REAR SHOCK IFP HEIGHT TOOL (FOR SETTING IFP HEIGHT) - SUPERDELUXE/SUPER DELUXE COIL

SUPER DELUXE COIL A1-A2 (2018-2020)

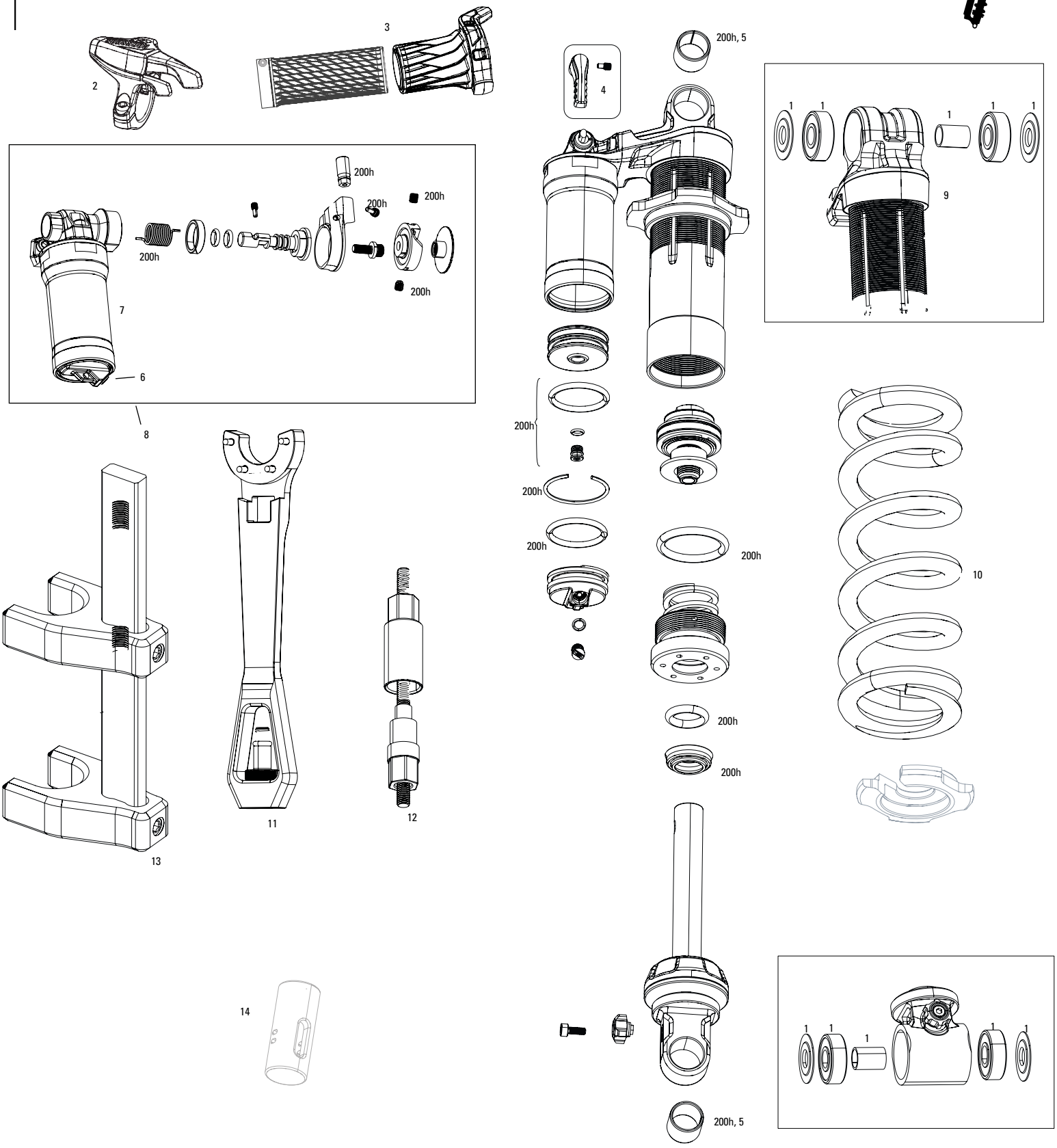

SUPER DELUXE COIL A1-A2 (2018-2020)

	SERVICE	
200hr	00.4315.032.638	200 HOUR/1 YEAR SERVICE KIT (INCLUDES SEALHEAD SEALS, PISTON SEAL, GLIDE RINGS, IFP SEALS, REMOTE SPARES) - SUPER DELUXE COIL/COIL REMOTE A1-A2 (2018-2020)
200hr	00.4315.032.639	200 HOUR/1 YEAR SERVICE KIT (INCLUDES SEALHEAD SEALS, PISTON SEAL, GLIDE RINGS, IFP SEALS) - SUPER DELUXE COIL A1-A2 (2018-2020)
	SPARES	
1	11.4118.046.000	REAR SHOCK EYELET BEARING KIT - WITH SPACERS (INCLUDES BEARINGS & SPACERS FOR BR EYELETS) - DELUXE/SUPER DELUXE BR (2017+)
2	00.4318.002.009	REMOTE - ONELOC LEFT/ABOVE, RIGHT/BELOW 10MM, REMOTE ONLY (INCLUDES REMOTE, CABLE&HOUSING)-SID,REBA,REVELATION,BLUTO,SEKTOR,RECONGOLD(2013-2017)/JUDY
2	00.4318.002.010	REMOTE - ONELOC RIGHT/ABOVE, LEFT/BELOW 10MM, REMOTE ONLY (INCLUDES REMOTE, CABLE&HOUSING)-SID,REBA,REVELATION,BLUTO,SEKTOR,RECONGOLD(2013-2017)/JUDY
3	00.4318.024.000	REMOTE - TWISTLOC FULL SPRINT LEFT 10MM CABLE PULL (INCLUDES STRAIT & CURVED CABLE GUIDES, LEFT & RIGHT GRIPS) - METRIC REAR SHOCKS, RL (2013+) & CHARGER DAMPERS
4	11.4115.107.070	REAR SHOCK COMPRESSION KNOB KIT - SUPER DELUXE A1-B2 (2017-2020)
5	11.4115.013.000	REAR SHOCK EYELET BUSHING KIT -1/2"X1/2" (QTY 2)
6	11.4118.057.000	REAR SHOCK RESERVOIR CAP - SUPER DELUXE AIR/COIL R/RC/RCR/RCT/RC3/RT
7	11.4118.057.001	REAR SHOCK RESERVOIR - 62MM -SUPER DELUXE AIR/COIL R/RC3/RCR (37.5-65)
7	11.4118.057.002	REAR SHOCK RESERVOIR - 68MM -SUPER DELUXE AIR/COIL R/RC3/RCR(67.5-75), RCT/RC(37.5-65)
7	11.4118.057.003	REAR SHOCK RESERVOIR - 74MM -SUPER DELUXE AIR/COIL RCT/RC(67.5-75)
8	11.4118.057.004	REAR SHOCK RESERVOIR ASSEMBLY - 62MM, SOFT PEDAL, 380 LOCK (INCLUDES RESERVOIR, INTERNALS& LEVER) -SUPER DELUXE AIR/COIL RC3 A1+ (37.5-65)
8	11.4118.057.005	REAR SHOCK RESERVOIR ASSEMBLY - 68MM, SOFT PEDAL, 380 LOCK (INCLUDES RESERVOIR, INTERNALS& LEVER) -SUPER DELUXE AIR/COIL RC3 A1+ (67.5-75)
8	11.4118.057.006	REAR SHOCK RESERVOIR ASSEMBLY - 62MM, 380 LOCK (INCLUDES RESERVOIR, INTERNALS & REMOTE SPOOL) - SUPER DELUXE AIR/COIL RCR/RTR A1+ (37.5-65)
8	11.4118.057.007	REAR SHOCK RESERVOIR ASSEMBLY - 68MM, 380 LOCK (INCLUDES RESERVOIR, INTERNALS & REMOTE SPOOL) - SUPER DELUXE AIR/COIL RCR/RTR A1+ (67.5-75)
8	11.4118.057.008	REAR SHOCK RESERVOIR ASSEMBLY - 68MM, 380 LOCK (INCLUDES RESERVOIR, INTERNALS& LEVER) -SUPER DELUXE AIR/COIL RCT A1+ (37.5-65)
8	11.4118.057.009	REAR SHOCK RESERVOIR ASSEMBLY - 74MM, 380 LOCK (INCLUDES RESERVOIR, INTERNALS& LEVER) -SUPER DELUXE AIR/COIL RCT A1+ (67.5-75)
8	11.4118.057.010	REAR SHOCK RESERVOIR ASSEMBLY - 68MM, (INCLUDES RESERVOIR, INTERNALS & LEVER) -SUPER DELUXE AIR/COIL RC A1+ (37.5-65)
8	11.4118.057.011	REAR SHOCK RESERVOIR ASSEMBLY - 74MM, (INCLUDES RESERVOIR, INTERNALS & LEVER) -SUPER DELUXE AIR/COIL RC A1+ (67.5-75)
9	11.4118.060.000	REAR SHOCK EYELET/DAMPER BODY - METRIC COIL, TRUNNION, 55 - SUPER DELUXE COIL A1-A2 (2018-2019)
9	11.4118.060.001	REAR SHOCK EYELET/DAMPER BODY - METRIC COIL, TRUNNION, 65 - SUPER DELUXE COIL A1-A2 (2018-2019)
9	11.4118.060.002	REAR SHOCK EYELET/DAMPER BODY - METRIC COIL, TRUNNION, 75 - SUPER DELUXE COIL A1-A2 (2018-2019)
ns	11.4118.085.002	REAR SHOCK DAMPER SHAFT PISTON - (INCLUDES GLIDE RING AND O-RING) - SUPER DELUXE COIL A1-A2 (2018-2020), HOT DOG
	SPRING	
10	00.4118.200.000	SPRING, METRIC COIL, LENGTH 134MM, SPRING TRAVEL (47.5-55MM), 350 LB
10	00.4118.200.001	SPRING, METRIC COIL, LENGTH 134MM, SPRING TRAVEL (47.5-55MM), 400 LB
10	00.4118.200.002	SPRING, METRIC COIL, LENGTH 134MM, SPRING TRAVEL (47.5-55MM), 450 LB
10	00.4118.200.003	SPRING, METRIC COIL, LENGTH 134MM, SPRING TRAVEL (47.5-55MM), 500 LB
10	00.4118.200.004	SPRING, METRIC COIL, LENGTH 134MM, SPRING TRAVEL (47.5-55MM), 550 LB
10	00.4118.200.005	SPRING, METRIC COIL, LENGTH 134MM, SPRING TRAVEL (47.5-55MM), 600 LB
10	00.4118.200.006	SPRING, METRIC COIL, LENGTH 134MM, SPRING TRAVEL (47.5-55MM), 650 LB
10	00.4118.200.007	SPRING, METRIC COIL, LENGTH 151MM, SPRING TRAVEL (57.5-65MM), 300 LB
10	00.4118.200.008	SPRING, METRIC COIL, LENGTH 151MM, SPRING TRAVEL (57.5-65MM), 350 LB
10	00.4118.200.009	SPRING, METRIC COIL, LENGTH 151MM, SPRING TRAVEL (57.5-65MM), 400 LB
10	00.4118.200.010	SPRING, METRIC COIL, LENGTH 151MM, SPRING TRAVEL (57.5-65MM), 450 LB
10	00.4118.200.011	SPRING, METRIC COIL, LENGTH 151MM, SPRING TRAVEL (57.5-65MM), 500 LB
10	00.4118.200.012	SPRING, METRIC COIL, LENGTH 151MM, SPRING TRAVEL (57.5-65MM), 550 LB
10	00.4118.200.013	SPRING, METRIC COIL, LENGTH 151MM, SPRING TRAVEL (57.5-65MM), 600 LB
10	00.4118.200.014	SPRING, METRIC COIL, LENGTH 151MM, SPRING TRAVEL (57.5-65MM), 650 LB
10	00.4118.200.015	SPRING, METRIC COIL, LENGTH 174MM, SPRING TRAVEL (67.5-75MM), 250 LB
10	00.4118.200.016	SPRING, METRIC COIL, LENGTH 174MM, SPRING TRAVEL (67.5-75MM), 300 LB
10	00.4118.200.017	SPRING, METRIC COIL, LENGTH 174MM, SPRING TRAVEL (67.5-75MM), 350 LB
10	00.4118.200.018	SPRING, METRIC COIL, LENGTH 174MM, SPRING TRAVEL (67.5-75MM), 400 LB
10	00.4118.200.019	SPRING, METRIC COIL, LENGTH 174MM, SPRING TRAVEL (67.5-75MM), 450 LB
10	00.4118.200.020	SPRING, METRIC COIL, LENGTH 174MM, SPRING TRAVEL (67.5-75MM), 500 LB
10	00.4118.200.021	SPRING, METRIC COIL, LENGTH 174MM, SPRING TRAVEL (67.5-75MM), 550 LB
10	00.4118.200.022	SPRING, METRIC COIL, LENGTH 174MM, SPRING TRAVEL (67.5-75MM), 600 LB
10	00.4118.200.023	SPRING, METRIC COIL, RED , LENGTH 134MM, SPRING TRAVEL (47.5-55MM), 350 LB
10	00.4118.200.024	SPRING, METRIC COIL, RED , LENGTH 134MM, SPRING TRAVEL (47.5-55MM), 400 LB
10	00.4118.200.025	SPRING, METRIC COIL, RED , LENGTH 134MM, SPRING TRAVEL (47.5-55MM), 450 LB
10	00.4118.200.026	SPRING, METRIC COIL, RED , LENGTH 134MM, SPRING TRAVEL (47.5-55MM), 500 LB
10	00.4118.200.027	SPRING, METRIC COIL, RED , LENGTH 134MM, SPRING TRAVEL (47.5-55MM), 550 LB
10	00.4118.200.028	SPRING, METRIC COIL, RED , LENGTH 134MM, SPRING TRAVEL (47.5-55MM), 600 LB
10	00.4118.200.029	SPRING, METRIC COIL, RED , LENGTH 134MM, SPRING TRAVEL (47.5-55MM), 650 LB
10	00.4118.200.030	SPRING, METRIC COIL, RED , LENGTH 151MM, SPRING TRAVEL (57.5-65MM), 300 LB
10	00.4118.200.031	SPRING, METRIC COIL, RED , LENGTH 151MM, SPRING TRAVEL (57.5-65MM), 350 LB
10	00.4118.200.032	SPRING, METRIC COIL, RED , LENGTH 151MM, SPRING TRAVEL (57.5-65MM), 400 LB
10	00.4118.200.033	SPRING, METRIC COIL, RED , LENGTH 151MM, SPRING TRAVEL (57.5-65MM), 450 LB
10	00.4118.200.034	SPRING, METRIC COIL, RED , LENGTH 151MM, SPRING TRAVEL (57.5-65MM), 500 LB
10	00.4118.200.035	SPRING, METRIC COIL, RED , LENGTH 151MM, SPRING TRAVEL (57.5-65MM), 550 LB
10	00.4118.200.036	SPRING, METRIC COIL, RED , LENGTH 151MM, SPRING TRAVEL (57.5-65MM), 600 LB
10	00.4118.200.037	SPRING, METRIC COIL, RED , LENGTH 151MM, SPRING TRAVEL (57.5-65MM), 650 LB
10	00.4118.200.038	SPRING, METRIC COIL, RED , LENGTH 174MM, SPRING TRAVEL (67.5-75MM), 250 LB
10	00.4118.200.039	SPRING, METRIC COIL, RED , LENGTH 174MM, SPRING TRAVEL (67.5-75MM), 300 LB
10	00.4118.200.040	SPRING, METRIC COIL, RED , LENGTH 174MM, SPRING TRAVEL (67.5-75MM), 350 LB
10	00.4118.200.041	SPRING, METRIC COIL, RED , LENGTH 174MM, SPRING TRAVEL (67.5-75MM), 400 LB
10	00.4118.200.042	SPRING, METRIC COIL, RED , LENGTH 174MM, SPRING TRAVEL (67.5-75MM), 450 LB
10	00.4118.200.043	SPRING, METRIC COIL, RED , LENGTH 174MM, SPRING TRAVEL (67.5-75MM), 500 LB
10	00.4118.200.044	SPRING, METRIC COIL, RED , LENGTH 174MM, SPRING TRAVEL (67.5-75MM), 550 LB
10	00.4118.200.045	SPRING, METRIC COIL, RED , LENGTH 174MM, SPRING TRAVEL (67.5-75MM), 600 LB
	TOOLS/GREASE/FLUIDS	
11	00.4315.028.010	REAR SHOCK SPANNER WRENCH/AIR VALVE TOOL - ROCKSHOX VIVID/VIVID AIR/SUPER DELUXE COIL
12	00.4315.026.010	REAR SHOCK 1/2"X1/2" BUSHING TOOL (EYELET/SEALHEAD) ROCKSHOX
13	00.4118.045.001	REAR SHOCK SPRING COMPRESSOR TOOL, COUNTER MEASURE - ROCKSHOX VIVID/VIVID AIR
14	00.4318.012.009	REAR SHOCK IFP HEIGHT TOOL (FOR SETTING IFP HEIGHT) - SUPERDELUXE/SUPER DELUXE COIL

MOUNTING HARDWARE - METRIC

00.4118.159.000	REAR SHOCK MOUNTING HARDWARE METRIC 6X15MM 3-PIECE (1 SET)
00.4118.159.001	REAR SHOCK MOUNTING HARDWARE METRIC 6X20MM 3-PIECE (1 SET)
00.4118.159.002	REAR SHOCK MOUNTING HARDWARE METRIC 6X25MM 3-PIECE (1 SET)
00.4118.159.003	REAR SHOCK MOUNTING HARDWARE METRIC 6X30MM 3-PIECE (1 SET)
00.4118.159.004	REAR SHOCK MOUNTING HARDWARE METRIC 6X35MM 3-PIECE (1 SET)
00.4118.159.005	REAR SHOCK MOUNTING HARDWARE METRIC 6X40MM 3-PIECE (1 SET)
00.4118.159.006	REAR SHOCK MOUNTING HARDWARE METRIC 6X45MM 3-PIECE (1 SET)
00.4118.159.007	REAR SHOCK MOUNTING HARDWARE METRIC 8X15MM 3-PIECE (1 SET)
00.4118.159.008	REAR SHOCK MOUNTING HARDWARE METRIC 8X20MM 3-PIECE (1 SET)
00.4118.159.009	REAR SHOCK MOUNTING HARDWARE METRIC 8X25MM 3-PIECE (1 SET)
00.4118.159.010	REAR SHOCK MOUNTING HARDWARE METRIC 8X30MM 3-PIECE (1 SET)
00.4118.159.011	REAR SHOCK MOUNTING HARDWARE METRIC 8X35MM 3-PIECE (1 SET)
00.4118.159.012	REAR SHOCK MOUNTING HARDWARE METRIC 8X40MM 3-PIECE (1 SET)
00.4118.159.013	REAR SHOCK MOUNTING HARDWARE METRIC 8X45MM 3-PIECE (1 SET)
00.4118.159.014	REAR SHOCK MOUNTING HARDWARE METRIC 10X15MM 3-PIECE (1 SET)
00.4118.159.015	REAR SHOCK MOUNTING HARDWARE METRIC 10X20MM 3-PIECE (1 SET)
00.4118.159.016	REAR SHOCK MOUNTING HARDWARE METRIC 10X25MM 3-PIECE (1 SET)
00.4118.159.017	REAR SHOCK MOUNTING HARDWARE METRIC 10X30MM 3-PIECE (1 SET)
00.4118.159.018	REAR SHOCK MOUNTING HARDWARE METRIC 10X35MM 3-PIECE (1 SET)
00.4118.159.019	REAR SHOCK MOUNTING HARDWARE METRIC 10X40MM 3-PIECE (1 SET)
00.4118.159.020	REAR SHOCK MOUNTING HARDWARE METRIC 10X45MM 3-PIECE (1 SET)
00.4118.159.021	REAR SHOCK MOUNTING HARDWARE METRIC 8X50MM 3-PIECE (1 SET) OFF SET - TREK ALUMINUM
00.4118.159.022	REAR SHOCK MOUNTING HARDWARE METRIC 10X50MM 3-PIECE (1 SET)OFF SET - TREK CARBON
00.4118.159.023	REAR SHOCK MOUNTING HARDWARE METRIC 10X60MM 3-PIECE (1 SET) OFF SET
00.4118.159.024	REAR SHOCK METRIC 40MM BEARING DUST COVER QTY 2
00.4118.159.025	Rear Shock Moutning Hardware Metric 18.5x5mm 3-piece (1 set) Off Set - Trek Carbon
00.4118.159.027	REAR SHOCK MOUNTING HARDWARE METRIC 8X40MM 3-PIECE (1 SET)OFF SET - TREK CARBON SESSION
00.4118.159.030	Rear Shock Mounting Hardware Metric 10X50mm 3-piece (1 set)
00.4118.159.031	Rear Shock Mounting Hardware Metric 10x54mm 3-piece (1 set)

Note:

1. After 2017, the only Rock Shox models using metric hardware include Super Deluxe, Super Deluxe Coil and Deluxe.

MAXLE

	FRONT	REAR
MAXLE ULTIMATE	1	2
MAXLE LITE 20X110	3	
MAXLE DH	4	
MAXLE LITE	5	6
MAXLE STEALTH	7	8
MAXLE LITE LEVER	9	9, 10
MAXLE ULTIMATE LEVER	11	11

MAXLE

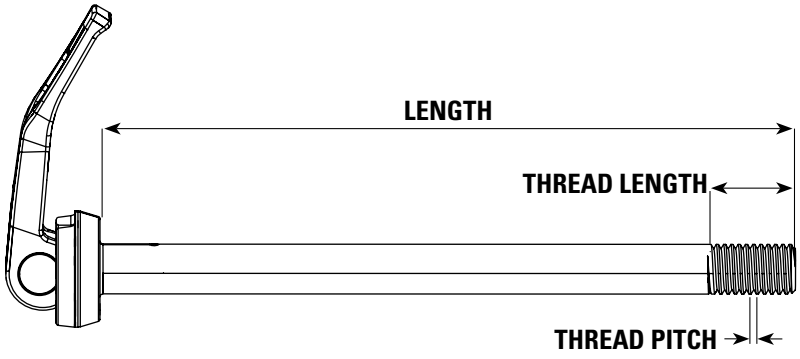

Note:
1. Rear Maxle requires compatible bicycle frame/drop-out.
2. Original (2008-2009) Rear Maxle assembly is no longer available.
3. Rear Maxle Lite or Ultimate lever and internals are NOT compatible with original Rear Maxle.

	MAXLE ULTIMATE	
1	00.4318.005.001	AXLE MAXLE ULTIMATE FRONT, 15X100, LENGTH 146.5MM, THREAD LENGTH 9MM, THREAD PITCH M15X1.50 - PIKE, RS1, LYRIK B1, YARI, SID, SID SL, SID 35MM
1	00.4318.005.007	AXLE MAXLE ULTIMATE FRONT MTB, 15X110, LENGTH 158MM, THREAD LENGTH 9MM, THREAD PITCH M15X1.50 - PIKE, LYRIK B1, YARI BOOST COMPATIBLE
1	00.4318.005.006	AXLE MAXLE ULTIMATE FRONT ROAD, 15X100, LENGTH 125MM, THREAD LENGTH 9MM, THREAD PITCH M15X1.50 - ROAD
1	00.4318.005.005	AXLE MAXLE ULTIMATE FRONT ROAD, 12X100, LENGTH 125MM, THREAD LENGTH 12MM, THREAD PITCH M12X1.50 - ROAD
2	00.4318.005.008	AXLE MAXLE ULTIMATE REAR MTB, 12X135, LENGTH 167MM, THREAD LENGTH 20MM, THREAD PITCH M12X1.75 - STANDARD
2	00.4318.005.009	AXLE MAXLE ULTIMATE REAR MTB, 12X142, LENGTH 174MM, THREAD LENGTH 20MM, THREAD PITCH M12X1.75 - STANDARD
2	00.4318.005.010	AXLE MAXLE ULTIMATE REAR MTB, 12X148, LENGTH 180MM, THREAD LENGTH 20MM, THREAD PITCH M12X1.75 - BOOST COMPATIBLE
2	00.4318.005.011	AXLE MAXLE ULTIMATE REAR MTB, 12X150, LENGTH 182MM, THREAD LENGTH 20MM, THREAD PITCH M12X1.75 - STANDARD
2	00.4318.005.012	AXLE MAXLE ULTIMATE REAR MTB, 12X148, LENGTH 188MM, THREAD LENGTH 20MM, THREAD PITCH M12X1.75 - BOOST COMPATIBLE
2	00.4318.005.013	AXLE MAXLE ULTIMATE REAR MTB, 12X142, LENGTH 195MM, THREAD LENGTH 20MM, THREAD PITCH M12X1.75 - SPLIT PIVOT CUSTOM
2	00.4318.005.014	AXLE MAXLE ULTIMATE REAR MTB, 12X177, LENGTH 217MM, THREAD LENGTH 20MM, THREAD PITCH M12X1.75 - FAT BIKE CUSTOM
2	00.4318.005.015	AXLE MAXLE ULTIMATE REAR MTB, 12X197, LENGTH 229MM, THREAD LENGTH 20MM, THREAD PITCH M12X1.50 - FAT BIKE CUSTOM
	MAXLE LITE 2X110	
3	00.4315.013.010	AXLE MAXLE LITE FRONT MTB 20X110 LENGTH 158MM THREAD LENGTH 9MM THREAD PITCH M20X2.0 - 32MM CHASSIS (2011-2016)
3	00.4315.013.030	AXLE MAXLE LITE FRONT MTB 20X110 LENGTH 165MM THREAD LENGTH 9MM THREAD PITCH M20X2.0 - 35MM/40MM CHASSIS (2011-2016)
4	00.4315.013.040	AXLE MAXLE DH FRONT MTB 20X110 LENGTH 165MM THREAD LENGTH 9MM THREAD PITCH M20X2.0 - 35MM CHASSIS
	MAXLE LITE	
5	00.4318.005.002	AXLE MAXLE LITE FRONT, 15X100, LENGTH 148MM, THREAD LENGTH 9MM, THREAD PITCH M15X1.50 - REBA/REVELATION/RECON/SEKTOR/XC32/SID/SID SL/SID 35MM
5	00.4318.005.003	AXLE MAXLE LITE FRONT MTB, 15X150, LENGTH 198MM, THREAD LENGTH 9MM, THREAD PITCH M15X1.50 - BLUTO A1
5	00.4318.005.004	AXLE MAXLE LITE FRONT MTB, 15X110, LENGTH 158MM, THREAD LENGTH 9MM, THREAD PITCH M15X1.50 BOOST COMPATIBLE - SID/REBA
6	00.4315.015.020	AXLE MAXLE LITE REAR 12X142, LENGTH 174MM, THREAD LENGTH 20MM, THREAD PITCH M12X1.75 - STANDARD
6	00.4315.015.030	AXLE MAXLE LITE REAR 12X150, LENGTH 182MM, THREAD LENGTH 20MM, THREAD PITCH M12X1.75 - STANDARD
ns	11.4315.023.000	AXLE MAXLE - LITE REAR 12X142, LENGTH 192MM, THREAD LENGTH 20MM, THREAD PITCH M12X1.75 - TREK
ns	11.4315.023.010	AXLE MAXLE - LITE REAR 12X157, LENGTH 205MM, THREAD LENGTH 20MM, THREAD PITCH M12X1.75 - BERGAMONT
ns	11.4315.023.020	AXLE MAXLE - LITE REAR 12X157, LENGTH 205MM, THREAD LENGTH 15MM, THREAD PITCH M12X1.75 - TREK
	MAXLE STEALTH	
7	00.4318.005.016	AXLE MAXLE STEALTH FRONT ROAD, 12X100, LENGTH 125MM, THREAD LENGTH 12MM, THREAD PITCH M12X1.50 - ROAD
7	00.4318.005.017	AXLE MAXLE STEALTH FRONT ROAD, 15X100, LENGTH 125MM, THREAD LENGTH 9MM, THREAD PITCH M15X1.50 ROAD
7	00.4318.005.018	AXLE MAXLE STEALTH FRONT, 15X100, LENGTH 148MM, THREAD LENGTH 9MM, THREAD PITCH M15X1.50 (NOT COMPATIBLE WITH RS-1) - 15X100, SID SL, SID 35MM
7	00.4318.005.019	AXLE MAXLE STEALTH FRONT MTB, 15X110, LENGTH 158MM, THREAD LENGTH 9MM, THREAD PITCH M15X1.50 - BOOST COMPATIBLE
7	00.4318.005.020	AXLE MAXLE STEALTH FRONT MTB, 15X150, LENGTH 198MM, THREAD LENGTH 9MM, THREAD PITCH M15X1.50 - BLUTO
8	00.4318.005.021	AXLE MAXLE STEALTH FRONT ROAD, 12X100, LENGTH 118.5MM, THREAD LENGTH 9MM, THREAD PITCH M12X1.5 - ROAD FORKS
8	00.4318.005.022	AXLE MAXLE STEALTH REAR MTB, 12X142, LENGTH 160MM, THREAD LENGTH 20MM, THREAD PITCH M12X1.5 - ROAD FRAMES
8	00.4318.005.023	AXLE MAXLE STEALTH REAR MTB, 12X142, LENGTH 164MM, THREAD LENGTH 10MM, THREAD PITCH M12X1.5 - STANDARD FRAMES
8	00.4318.005.024	AXLE MAXLE STEALTH REAR MTB, 12X142, LENGTH 167MM, THREAD LENGTH 20MM, THREAD PITCH M12X1.0 - SANTA CRUZ/SCOTT FRAMES
8	00.4318.005.025	AXLE MAXLE STEALTH REAR MTB, 12X148, LENGTH 170MM, THREAD LENGTH 10MM, THREAD PITCH M12X1.5 - BOOST E-THRU INTERFACE FRAMES
8	00.4318.005.026	AXLE MAXLE STEALTH REAR MTB, 12X142, LENGTH 170.5MM, THREAD LENGTH 14MM, THREAD PITCH M12X1.5 - GIANT FRAMES
8	00.4318.005.027	AXLE MAXLE STEALTH REAR MTB, 12X142, LENGTH 174MM, THREAD LENGTH 20MM, THREAD PITCH M12X1.75 - STANDARD FRAMES
8	00.4318.005.028	AXLE MAXLE STEALTH REAR MTB, 12X148, LENGTH 180MM, THREAD LENGTH 20MM, THREAD PITCH M12X1.75 - BOOST FRAMES
8	00.4318.005.029	AXLE MAXLE STEALTH REAR MTB, 12X148, LENGTH 188MM, THREAD LENGTH 20MM, THREAD PITCH M12X1.75 - BOOST SPLIT PIVOT FRAMES
8	00.4318.005.030	AXLE MAXLE STEALTH REAR MTB, 12X148, LENGTH 195MM, THREAD LENGTH 20MM, THREAD PITCH M12X1.75 - BOOST TREK ABP FRAMES
	MAXLE	
9	11.4318.004.001	AXLE MAXLE - LITE 15MM XC LEVER ASSEMBLY
11	11.4318.004.000	AXLE MAXLE - ULTIMATE LEVER ASSEMBLY B1

DECALS

ROCKSHOX SIGNATURE SERIES DECALS (2021)

11.4018.105.056	FORK DECAL KIT - BOXXER ULTIMATE 27/29 GLOSS POLAR FOIL FOR RED (2021)
11.4018.105.055	FORK DECAL KIT - BOXXER ULTIMATE 27/29 GLOSS POLAR FOIL FOR HIGH GLOSS BLACK (2021)
11.4018.105.054	FORK DECAL KIT - ZEB ULTIMATE 27/29 GLOSS BLACK FOR MATTE GREY (2021)
11.4018.105.053	FORK DECAL KIT - ZEB ULTIMATE 27/29 GLOSS RAINBOW FOIL FOR HIGH GLOSS BLACK (2021)
11.4018.105.052	FORK DECAL KIT - ZEB ULTIMATE 27/29 GLOSS POLAR FOIL FOR HIGH GLOSS BLACK (2021)
11.4018.105.051	FORK DECAL KIT - ZEB ULTIMATE 27/29 MATTE COPPER FOIL FOR HIGH GLOSS BLACK (2021)
11.4018.105.050	FORK DECAL KIT - LYRIK ULTIMATE 27/29 GLOSS POLAR FOIL FOR RED (2021)
11.4018.105.049	FORK DECAL KIT - LYRIK ULTIMATE 27/29 GLOSS RAINBOW FOIL FOR HIGH GLOSS BLACK (2021)
11.4018.105.048	FORK DECAL KIT - LYRIK ULTIMATE 27/29 GLOSS POLAR FOIL FOR HIGH GLOSS BLACK (2021)
11.4018.105.047	FORK DECAL KIT - LYRIK ULTIMATE 27/29 MATTE COPPER FOIL FOR HIGH GLOSS BLACK (2021)
11.4018.105.046	FORK DECAL KIT - PIKE ULTIMATE 27/29 GLOSS BLACK FOR SILVER (2021)
11.4018.105.045	FORK DECAL KIT - PIKE ULTIMATE 27/29 GLOSS RAINBOW FOIL FOR HIGH GLOSS BLACK (2021)
11.4018.105.044	FORK DECAL KIT - PIKE ULTIMATE 27/29 GLOSS POLAR FOIL FOR HIGH GLOSS BLACK (2021)
11.4018.105.043	FORK DECAL KIT - PIKE ULTIMATE 27/29 MATTE COPPER FOIL FOR HIGH GLOSS BLACK (2021)
11.4018.105.042	FORK DECAL KIT - SID ULTIMATE 27/29 GLOSS RAINBOW FOIL FOR HIGH GLOSS BLACK (2021)
11.4018.105.041	FORK DECAL KIT - SID ULTIMATE 27/29 GLOSS POLAR FOIL FOR HIGH GLOSS BLACK (2021)
11.4018.105.040	FORK DECAL KIT - SID ULTIMATE 27/29 MATTE COPPER FOIL FOR HIGH GLOSS BLACK (2021)
11.4018.105.039	FORK DECAL KIT - SID ULTIMATE 27/29 GLOSS POLAR FOIL FOR BLUE (2021)
11.4018.105.038	FORK DECAL KIT - SID SL ULTIMATE 27/29 GLOSS RAINBOW FOIL FOR HIGH GLOSS BLACK (2021)
11.4018.105.037	FORK DECAL KIT - SID SL ULTIMATE 27/29 GLOSS POLAR FOIL FOR HIGH GLOSS BLACK (2021)
11.4018.105.036	FORK DECAL KIT - SID SL ULTIMATE 27/29 MATTE COPPER FOIL FOR HIGH GLOSS BLACK (2021)
11.4018.105.035	FORK DECAL KIT - SID SL ULTIMATE 27/29 GLOSS POLAR FOIL FOR BLUE (2021)

ROCKSHOX SIGNATURE SERIES DECALS (2020)

11.4018.105.001	FORK DECAL KIT - BOXXER SELECT+ 27/29 GREY FOR DIFFUSION BLACK (2020+)
11.4018.105.002	FORK DECAL KIT - BOXXER SELECT+ 27/29 GREY FOR GLOSS BLACK (2020+)
11.4018.105.003	FORK DECAL KIT - BOXXER ULTIMATE 27/29 POLAR FOIL FOR GLOSS BLACK (2020+)
11.4018.105.004	FORK DECAL KIT - BOXXER ULTIMATE 27/29 POLAR FOIL FOR GLOSS RED (2020+)
11.4018.105.005	FORK DECAL KIT - PIKE SELECT 27/29 GREY FOR DIFFUSION BLACK (2020+)
11.4018.105.006	FORK DECAL KIT - PIKE SELECT 27/29 GREY FOR GLOSS BLACK (2020+)
11.4018.105.007	FORK DECAL KIT - PIKE SELECT+ 27/29 POLAR INK FOR DIFFUSION BLACK (2020+)
11.4018.105.008	FORK DECAL KIT - PIKE SELECT+ 27/29 POLAR INK FOR GLOSS BLACK (2020+)
11.4018.105.009	FORK DECAL KIT - PIKE ULTIMATE 27/29 POLAR FOIL FOR GLOSS BLACK (2020+)
11.4018.105.010	FORK DECAL KIT - PIKE ULTIMATE 27/29 POLAR FOIL FOR GLOSS SILVER (2020+)
11.4018.105.011	FORK DECAL KIT - LYRIK SELECT 27/29 GREY FOR DIFFUSION BLACK (2020+)
11.4018.105.012	FORK DECAL KIT - LYRIK SELECT 27/29 GREY FOR GLOSS BLACK (2020+)
11.4018.105.013	FORK DECAL KIT - LYRIK SELECT+ 27/29 POLAR INK FOR DIFFUSION BLACK (2020+)
11.4018.105.014	FORK DECAL KIT - LYRIK SELECT+ 27/29 POLAR INK FOR GLOSS BLACK (2020+)
11.4018.105.015	FORK DECAL KIT - LYRIK ULTIMATE 27/29 POLAR FOIL FOR GLOSS BLACK (2020+)
11.4018.105.016	FORK DECAL KIT - LYRIK ULTIMATE 27/29 POLAR FOIL FOR GLOSS RED (2020+)
11.4018.105.017	FORK DECAL KIT - SID SELECT 110-120MM 29 GREY FOR DIFFUSION BLACK (2020+)
11.4018.105.018	FORK DECAL KIT - SID SELECT 110-120MM 29 GREY FOR GLOSS BLACK (2020+)
11.4018.105.019	FORK DECAL KIT - SID SELECT+ 110-120MM 29 POLAR INK FOR DIFFUSION BLACK (2020+)
11.4018.105.020	FORK DECAL KIT - SID SELECT+ 110-120MM 29 POLAR INK FOR GLOSS BLACK (2020+)
11.4018.105.021	FORK DECAL KIT - SID ULTIMATE 110-120MM 29 POLAR FOIL FOR GLOSS BLACK (2020+)
11.4018.105.022	FORK DECAL KIT - SID ULTIMATE 110-120MM 29 POLAR FOIL FOR GLOSS BLUE (2020+)
11.4018.105.023	FORK DECAL KIT - SID SELECT 80-100MM 27/29 GREY FOR DIFFUSION BLACK (2020+)
11.4018.105.024	FORK DECAL KIT - SID SELECT 80-100MM 27/29 GREY FOR GLOSS BLACK (2020+)
11.4018.105.025	FORK DECAL KIT - SID SELECT+ 80-100MM 27/29 POLAR INK FOR DIFFUSION BLACK (2020+)
11.4018.105.026	FORK DECAL KIT - SID SELECT+ 80-100MM 27/29 POLAR INK FOR GLOSS BLACK (2020+)
11.4018.105.027	FORK DECAL KIT - SID ULTIMATE 80-100MM 27/29 POLAR FOIL FOR GLOSS BLACK (2020+)
11.4018.105.028	FORK DECAL KIT - SID ULTIMATE 80-100MM 27/29 POLAR FOIL FOR GLOSS BLUE (2020+)

TROY LEE DECALS

00.4318.021.000	DECAL KIT TROY LEE DESIGNS 35MM GOLD/ORANGE MY18 - PIKE/LYRIK/YARI/DOMAIN/REVELATION(2018+)
00.4318.021.001	DECAL KIT TROY LEE DESIGNS 35MM SILVER/ORANGE MY18 - PIKE/LYRIK/YARI/DOMAIN/REVELATION(2018+)
00.4318.021.002	DECAL KIT TROY LEE DESIGNS 35MM BLUE/YELLOW MY18 - PIKE/LYRIK/YARI/DOMAIN/REVELATION(2018+)

30/32MM - SID/REBA/REVELATION(PRE-2018)/SEKTOR/RECON/XC32/30G/30S/XC30

11.4318.003.504	FORK DECAL KIT - 30/32MM POLAR GREY MY18 - SID/REBA/REVELATION(PRE-2018)/SEKTOR/RECON/XC32/30G/30S/XC30
11.4318.003.503	FORK DECAL KIT - 30/32MM MAGENTA MY18 - SID/REBA/REVELATION(PRE-2018)/SEKTOR/RECON/XC32/30G/30S/XC30
11.4318.003.502	FORK DECAL KIT - 30/32MM WATER BLUE MY18 - SID/REBA/REVELATION(PRE-2018)/SEKTOR/RECON/XC32/30G/30S/XC30
11.4318.003.501	FORK DECAL KIT - 30/32MM NE05 GREEN MY18 - SID/REBA/REVELATION(PRE-2018)/SEKTOR/RECON/XC32/30G/30S/XC30
11.4318.003.500	FORK DECAL KIT - 30/32MM OXY RED MY18 - SID/REBA/REVELATION(PRE-2018)/SEKTOR/RECON/XC32/30G/30S/XC30
11.4318.003.499	FORK DECAL KIT - 30/32MM NE02 ORANGE MY18 - SID/REBA/REVELATION(PRE 2018)/SEKTOR/RECON/XC32/30G/30S/XC30
11.4318.003.498	FORK DECAL KIT - 30/32MM NE01 YELLOW MY18 - SID/REBA/REVELATION(PRE 2018)/SEKTOR/RECON/XC32/30G/30S/XC30
11.4318.003.497	FORK DECAL KIT - 30/32MM WHITE MY18 - SID/REBA/REVELATION(PRE-2018)/SEKTOR/RECON/XC32/30G/30S/XC30
11.4318.003.496	FORK DECAL KIT - 30/32MM STEALTH MY18 - SID/REBA/REVELATION(PRE-2018)/SEKTOR/RECON/XC32/30G/30S/XC30

35MM - PIKE/LYRIK/YARI/DOMAIN/REVELATION(2018+)

11.4318.003.513	FORK DECAL KIT - 35MM POLAR GREY MY18 - PIKE/LYRIK/YARI/DOMAIN/REVELATION(2018+)
11.4318.003.512	FORK DECAL KIT - 35MM MAGENTA MY18 - PIKE/LYRIK/YARI/DOMAIN/REVELATION(2018+)
11.4318.003.511	FORK DECAL KIT - 35MM WATER BLUE MY18 - PIKE/LYRIK/YARI/DOMAIN/REVELATION(2018+)
11.4318.003.510	FORK DECAL KIT - 35MM NE05 GREEN MY18 - PIKE/LYRIK/YARI/DOMAIN/REVELATION(2018+)
11.4318.003.509	FORK DECAL KIT - 35MM OXY RED MY18 - PIKE/LYRIK/YARI/DOMAIN/REVELATION(2018+)
11.4318.003.508	FORK DECAL KIT - 35MM NE02 ORANGE MY18 - PIKE/LYRIK/YARI/DOMAIN/REVELATION(2018+)
11.4318.003.507	FORK DECAL KIT - 35MM NE01 YELLOW MY18 - PIKE/LYRIK/YARI/DOMAIN/REVELATION(2018+)
11.4318.003.506	FORK DECAL KIT - 35MM WHITE MY18 - PIKE/LYRIK/YARI/DOMAIN/REVELATION(2018+)
11.4318.003.505	FORK DECAL KIT - 35MM STEALTH MY18 - PIKE/LYRIK/YARI/DOMAIN/REVELATION(2018+)

35MM DUAL CROWN - BOXXER/DOMAIN DUAL CROWN

11.4318.003.520	FORK DECAL KIT - 35MM DUAL CROWN WATER BLUE MY18 -BOXXER/DOMAIN DUAL CROWN
11.4318.003.519	FORK DECAL KIT - 35MM DUAL CROWN NE05 GREEN MY18 -BOXXER/DOMAIN DUAL CROWN
11.4318.003.518	FORK DECAL KIT - 35MM DUAL CROWN OXY RED MY18 - BOXXER/DOMAIN DUAL CROWN
11.4318.003.517	FORK DECAL KIT - 35MM DUAL CROWN NE02 ORANGE MY18 BOXXER/DOMAIN DUAL CROWN
11.4318.003.516	FORK DECAL KIT - 35MM DUAL CROWN NE01 YELLOW MY18 BOXXER/DOMAIN DUAL CROWN
11.4318.003.515	FORK DECAL KIT - 35MM DUAL CROWN WHITE MY18 - BOXXER/DOMAIN DUAL CROWN
11.4318.003.514	FORK DECAL KIT - 35MM DUAL CROWN STEALTH MY18 - BOXXER/DOMAIN DUAL CROWN

FENDERS

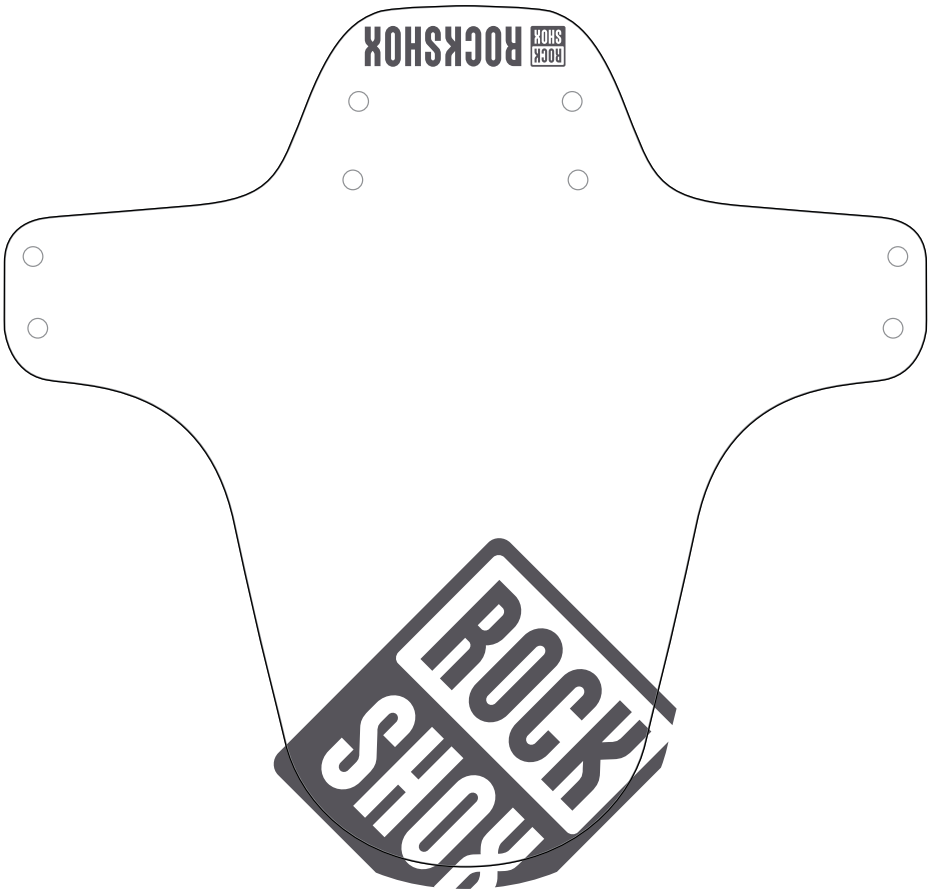

00.4318.020.000	ROCKSHOX MTB FENDER BLACK WITH WHITE PRINT
00.4318.020.001	ROCKSHOX MTB FENDER BLACK WITH STEALTH PRINT
00.4318.020.002	ROCKSHOX MTB FENDER BLACK WITH NEON YELLOW PRINT
00.4318.020.003	ROCKSHOX MTB FENDER BLACK WITH NEON ORANGE PRINT
00.4318.020.004	ROCKSHOX MTB FENDER BLACK WITH OXY RED PRINT
00.4318.020.005	ROCKSHOX MTB FENDER BLACK WITH NEON GREEN PRINT
00.4318.020.006	ROCKSHOX MTB FENDER BLACK WITH WATER BLUE PRINT
00.4318.020.007	ROCKSHOX MTB FENDER BLACK WITH MAGENTA PRINT
00.4318.020.008	ROCKSHOX MTB FENDER BLACK WITH POLAR GREY PRINT
00.4318.020.009	ROCKSHOX MTB FENDER BLACK WITH GLOSS BLUE PRINT - SID ULTIMATE
00.4318.020.010	ROCKSHOX MTB FENDER BLACK WITH BOXXER RED PRINT - BOXXER/LYRIK ULTIMATE
00.4318.020.011	ROCKSHOX MTB FENDER BLACK WITH GLOSS SILVER PRINT - PIKE ULTIMATE
00.4318.020.012	ROCKSHOX MTB FENDER BLACK WITH FIRE RED PRINT
00.4318.020.013	ROCKSHOX MTB FENDER BLACK WITH SEAFOAM GREEN PRINT
00.4318.020.014	ROCKSHOX MTB FENDER BLACK WITH TAN PUTTY PRINT
00.4318.020.015	ROCKSHOX MTB FENDER BLACK WITH FOREST GREEN PRINT
00.4318.020.016	ROCKSHOX MTB FENDER BLACK WITH NEON PINK PRINT
00.4318.020.017	ROCKSHOX MTB FENDER BLACK WITH FUSCHIA PRINT
00.4318.020.018	ROCKSHOX MTB FENDER BLACK WITH GRAY PUTTY PRINT
00.4318.020.019	ROCKSHOX MTB FENDER BLACK WITH TEAL PRINT
00.4318.020.020	ROCKSHOX MTB FENDER BLACK WITH GREEN CAMOUFLAGE PRINT
00.4318.020.021	ROCKSHOX MTB FENDER BLACK WITH TAN CAMOUFLAGE PRINT
00.4318.020.023	ROCKSHOX MTB FENDER BLACK WITH SILVER/WHITE FADE PRINT
00.4318.020.024	ROCKSHOX MTB FENDER BLACK WITH TEAL/YELLOW FADE PRINT
00.4318.020.025	ROCKSHOX MTB FENDER BLACK WITH YELLOW/BLUE FADE PRINT
00.4318.020.026	ROCKSHOX MTB FENDER BLACK WITH PINK/BLUE FADE PRINT
00.4318.020.027	ROCKSHOX MTB FENDER BLACK WITH WHITE DISTRESSED LOGO PRINT
00.4318.020.028	ROCKSHOX MTB FENDER BLACK WITH OUTLINE WHITE DISTRESSED LOGO PRINT
00.4318.020.029	ROCKSHOX MTB FENDER BLACK WITH DIGI CAMO GREEN PRINT
00.4318.020.030	ROCKSHOX MTB FENDER BLACK WITH DIGI CAMO BROWN PRINT
00.4318.020.031	SRAM MTB FENDER WOMEN'S PROGRAM GOLD PRINT
00.4318.020.032	ROCKSHOX MTB FENDER BLACK WITH USA FLAG PRINT
00.4318.020.033	ROCKSHOX MTB FENDER BLACK WITH UK FLAG PRINT
00.4318.020.034	ROCKSHOX MTB FENDER BLACK WITH CANADA FLAG PRINT
00.4318.020.035	ROCKSHOX MTB FENDER BLACK WITH GERMANY FLAG PRINT
00.4318.020.036	ROCKSHOX MTB FENDER BLACK WITH AUSTRALIA FLAG PRINT
00.4318.020.037	ROCKSHOX MTB FENDER BLACK WITH COLORADO FLAG PRINT
00.4318.020.038	ROCKSHOX MTB FENDER BLACK WITH CHICAGO FLAG PRINT

ONELOC (2016-2020)
PUSHLOC (2007-2012)/PUSHLOC (2013-2015)
TWISTLOC (2018-2020)
POPLOC -(2012-2020)

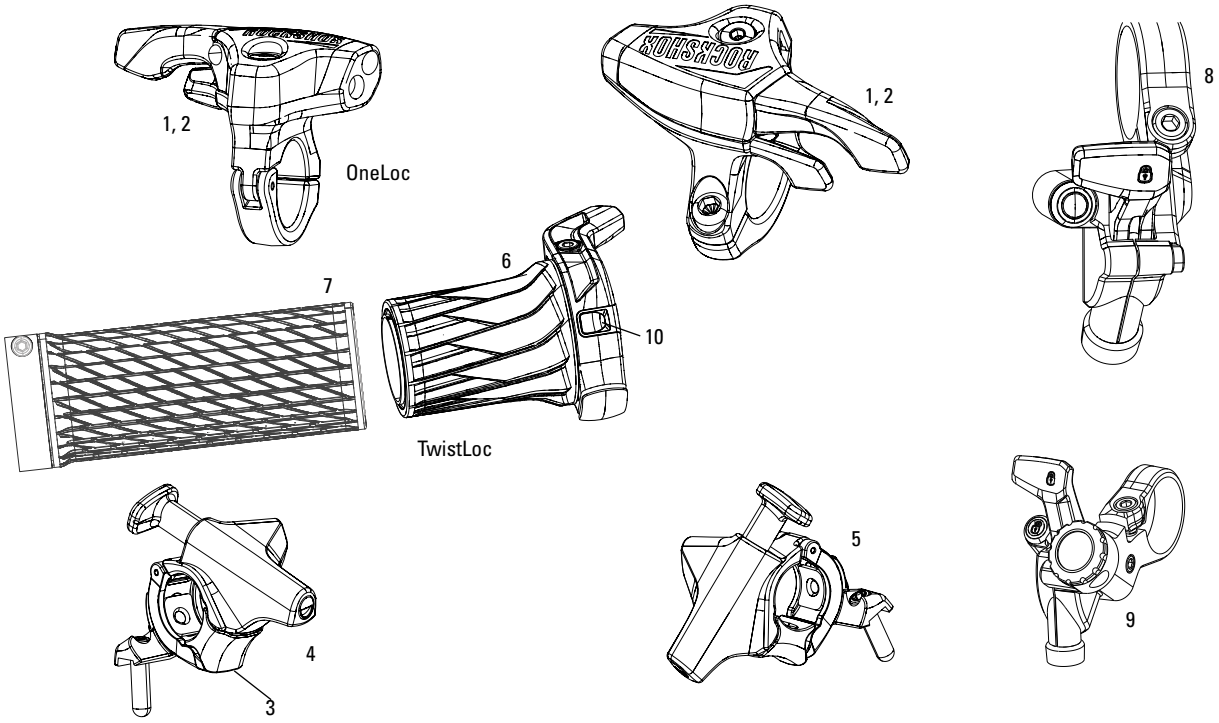

2013-2015 PushLoc MatchMaker

Note:

1. 2013-2015 PushLoc is right and left-specific and is compatible only with 2013+ Motion Control and Recon Gold TurnKey compression dampers. Cable pull = 10mm.
2. Pre-2013 PushLoc and PopLoc are compatible only with pre-2013 Motion Control compression dampers and is convertible to left and right vertical, and left and right horizontal. Cable pull = 17mm.
3. OneLoc is compatible with 2013+ Motion Control and Recond Gold TK dampers with 10mm cable pull and replaces PushLoc.

1	00.4318.002.009	REMOTE - ONELOC LEFT/ABOVE, RIGHT/BELOW 10MM, REMOTE ONLY (INCLUDES REMOTE, CABLE&HOUSING)-SID,REBA,REVELATION,BLUTO,SEKTOR,RECONGOLD(2013-2017)/JUDY
2	00.4318.002.010	REMOTE - ONELOC RIGHT/ABOVE, LEFT/BELOW 10MM, REMOTE ONLY (INCLUDES REMOTE, CABLE&HOUSING)-SID,REBA,REVELATION,BLUTO,SEKTOR,RECONGOLD(2013-2017)/JUDY
3	11.6818.001.000	REMOTE DISCRETE PUCK - HYDRAULIC REMOTE (SPACER) FOR XLOC REMOTES QTY2
4	11.5315.049.010	DISC BRAKE LEVER CLAMP SHIFTER MOUNTING BRACKET - (MMX) LEFT -GUIDE ULT/RSC/RS/RE/R,LEVEL ULT/TLM/TL, CODE RSC/R, DB5 ELIXIR 9/7/CR MAG/X0/ XX, QTY 1
5	11.5315.049.020	DISC BRAKE LEVER CLAMP SHIFTER MOUNTING BRACKET - (MMX) RIGHT -GUIDE ULT/RSC/RS/RE/R,LEVEL ULT/TLM/TL, CODE RSC/R, DB5 ELIXIR 9/7/CR MAG/X0/ XX, QTY 1
6	00.4318.024.000	REMOTE - TWISTLOC FULL SPRINT LEFT 10MM CABLE PULL (INCLUDES STRAIT & CURVED CABLE GUIDES, LEFT & RIGHT GRIPS) - METRIC REAR SHOCKS, RL (2013+) & CHARGER DAMPERS
7	00.4318.026.000	LOCKING GRIPS FOR TWISTLOC 77/125MM WITH BLACK CLAMPS AND END PLUG
8	11.4308.848.000	REMOTE - POPLOC LEFT 17MM CABLE PULL - RL (PRE-2013) & ALL TK DAMPERS, (NOT COMPATIBLE WITH 2013+ MOCO)
8	11.4309.207.000	REMOTE - POPLOC RIGHT 17MM CABLE PULL - RL (PRE-2013) & ALL TK DAMPERS
9	11.4308.849.000	REMOTE - POPLOC LEFT ADJUSTABLE 17MM CABLE PULL (NOT COMPATIBLE WITH 2013+ MOCO RL) - RL (PRE-2013) & TK DAMPERS
9	11.4309.208.000	REMOTE - POPLOC RIGHT ADJUSTABLE 17MM CABLE PULL (NOT COMPATIBLE WITH 2013+ MOCO RL) - RL (PRE-2013) & TK DAMPERS
ns	11.4311.184.000	REMOTE - POPLOC RIGHT SHOCK - ARIO
10	11.4018.112.000	REMOTE PLUGS- TWISTLOC (INCLUDES RUBBER TAB FOR LOCK/UNLOCK ICON) QTY 10

XLOC SPRINT FRONT SUSPENSION A1-A2 (2011-2019)

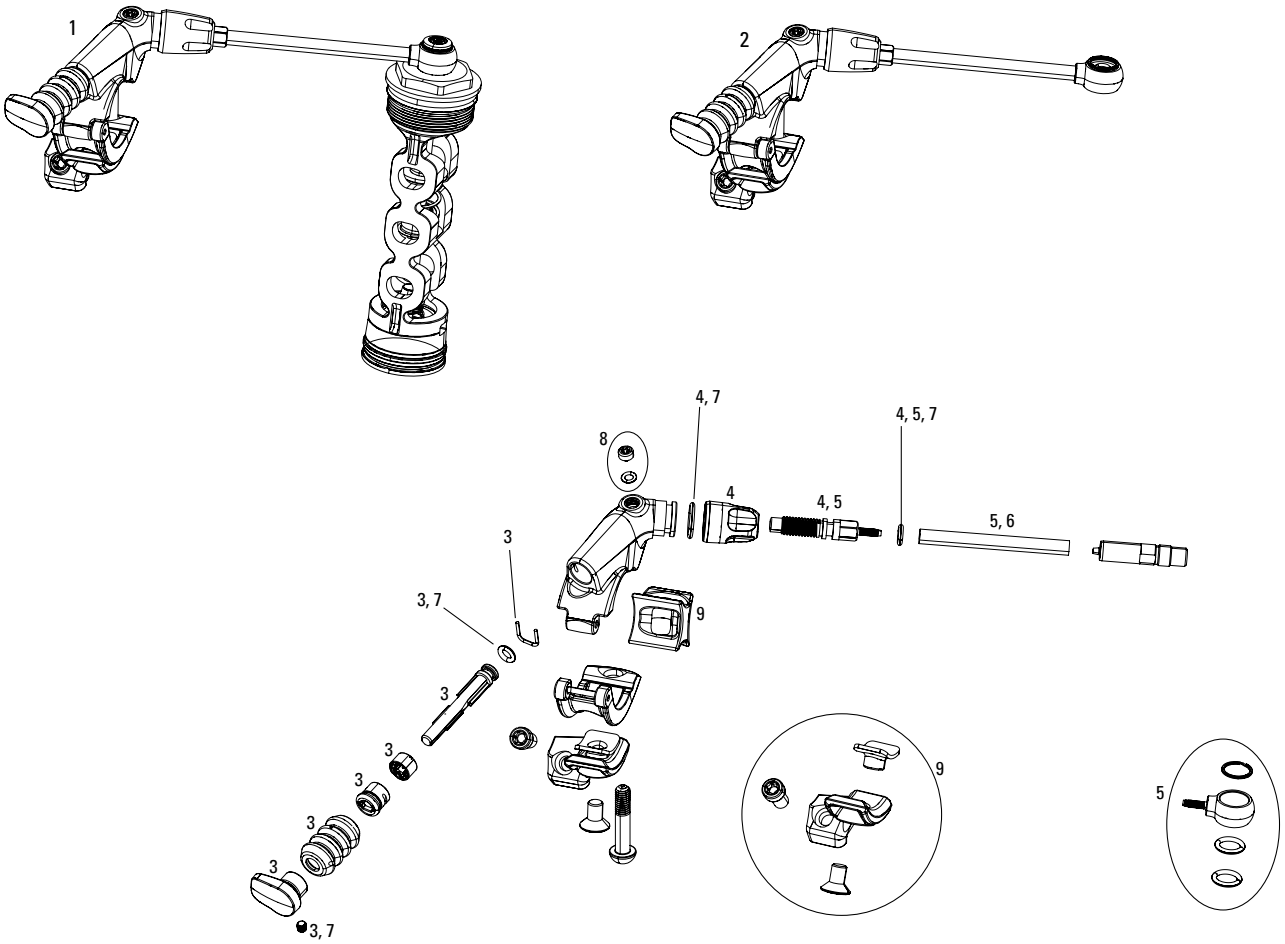

Note:
1.2014+ Xloc Remote (Gold Adjuster Knob) compatible with kits labeled "Gold Adjuster" only

2	11.4315.013.050	REMOTE - XLOC SPRINT LEFT GOLD ADJUSTER (INCLUDES HOSE/BANJO) - SID/REVELATION
2	11.4315.013.060	REMOTE - XLOC SPRINT RIGHT GOLD ADJUSTER (INCLUDES HOSE/BANJO) - SID/REVELATION
3	11.4315.014.010	REMOTE BUTTON KIT - XLOC LEFT (INCLUDES BUTTON, MASTER PISTON ASSEMBLY, BOOT) - XLOC
3	11.4315.014.020	REMOTE BUTTON KIT - XLOC RIGHT (INCLUDES BUTTON, MASTER PISTON ASSEMBLY, BOOT) - XLOC
4	11.4318.008.000	REMOTE ADJUSTER KIT - XLOC FLOODGATE - XLOC SPRINT/FULL SPRINT - GOLD ADJUSTER 2014-2016
5	11.4018.060.000	REMOTE HYDRAULIC HOSE KIT - (INCLUDES RETAINING RING, BANJO O-RINGS & HOSE BARB O-RING) - XLOC
6	11.4015.434.030	REMOTE HYDRAULIC HOSE KIT - 500MM (HOSE ONLY) SPRINT/FULL SPRINT, GOLD ADJUSTER (QTY 2) - XLOC 2014-2016
7	11.4315.019.000	REMOTE SERVICE KIT - XLOC SPRINT- SID/REVELATION
8	11.6818.001.000	REMOTE DISCRETE PUCK - HYDRAULIC REMOTE (SPACER) FOR XLOC REMOTES QTY2
9	11.5315.049.010	DISC BRAKE LEVER CLAMP SHIFTER MOUNTING BRACKET - (MMX) LEFT -GUIDE ULT/RSC/RS/RE/R,LEVEL ULT/TLM/TL, CODE RSC/R, DB5 ELIXIR 9/7/CR MAG/X0/ XX, QTY 1
9	11.5315.049.020	DISC BRAKE LEVER CLAMP SHIFTER MOUNTING BRACKET - (MMX) RIGHT -GUIDE ULT/RSC/RS/RE/R,LEVEL ULT/TLM/TL, CODE RSC/R, DB5 ELIXIR 9/7/CR MAG/X0/ XX, QTY 1
ns	11.4315.011.030	ROCKSHOX BLEED KIT (XLOC/TOTEM) QTY 2 (INCLUDES TWO SYRINGESAND FITTINGS, ONE TORX TOOL)
ns	00.4318.007.001	ROCKSHOX STANDARD BLEED KIT (INCLUDES 2 SYRINGES/FITTINGS, REVERB HYDRAULIC FLUID, 120ML BOTTLE NEW)
ns	11.4315.021.070	ROCKSHOX REVERB HYDRAULIC FLUID, 120ML BOTTLE - REVERB/SPRINT REMOTE
ns	11.4015.354.040	ROCKSHOX REVERB HYDRAULIC FLUID, 1 LITER BOTTLE - REVERB/SPRINT REMOTE

XLOC FULL SPRINT A1 (2014-2019)

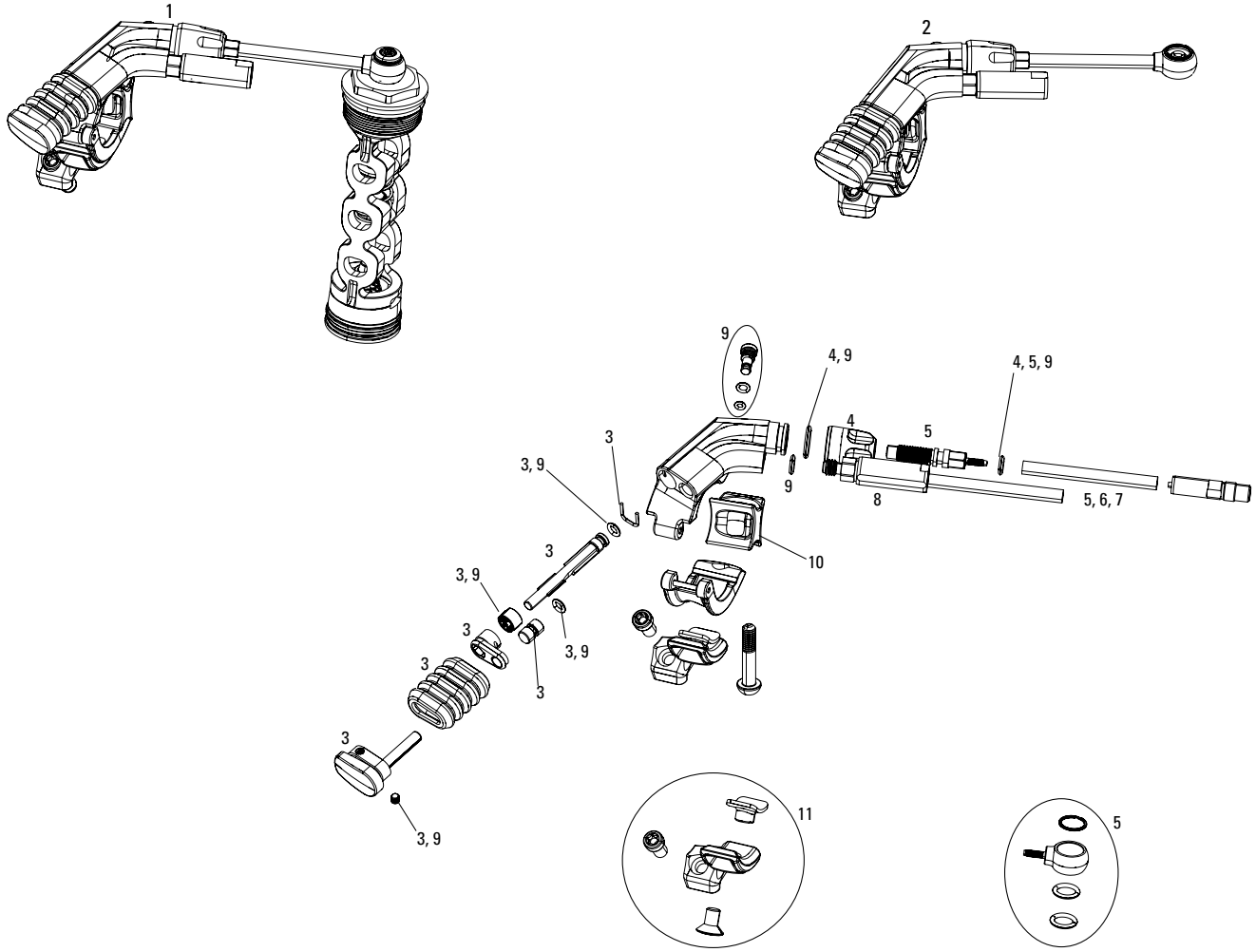

1	00.4318.004.001	REMOTE UPGRADE KIT - XLOC FULL SPRINT - INCLUDES MOTION CONTROL X DNA COMP DAMPER, REAR SHOCK HYDRAULIC HOSE, BLEED SYRINGES, LEFT, MMX, BLACK - SIDB (2011-2016)
1	00.4318.004.002	REMOTE UPGRADE KIT - XLOC FULL SPRINT - INCLUDES MOTION CONTROL X DNA COMP DAMPER, REAR SHOCK HYDRAULIC HOSE, BLEED SYRINGES, RIGHT, MMX, BLACK - SIDB (2011-2016)
2	11.4315.013.070	REMOTE - XLOC FULL SPRINT LEFT GOLD ADJUSTER (INCLUDES HOSE/BANJO) - SID/REVELATION/MONARCH XX
2	11.4315.013.080	REMOTE - XLOC FULL SPRINT RIGHT GOLD ADJUSTER (INCLUDES HOSE/BANJO) - SID/REVELATION/MONARCH XX
3	11.4318.007.000	REMOTE BUTTON KIT - XLOC FULL SPRINT (INCLUDES, BUTTON, BOOT, MASTER PISTON ASSEMBLY, XLOC FULL SPRINT) -XLOC FULL SPRINT W/GOLD ADJUSTER
4	11.4318.008.000	REMOTE ADJUSTER KIT - XLOC FLOODGATE - XLOC SPRINT/FULL SPRINT - GOLD ADJUSTER 2014-2016
5	11.4018.060.000	REMOTE HYDRAULIC HOSE KIT - (INCLUDES RETAINING RING, BANJO O-RINGS & HOSE BARB O-RING) - XLOC
6	11.4015.434.030	REMOTE HYDRAULIC HOSE KIT - 500MM (HOSE ONLY) SPRINT/FULL SPRINT, GOLD ADJUSTER (QTY 2) - XLOC 2014-2016
7	11.4318.002.020	REMOTE HYDRAULIC HOSE KIT - 2000M XLOC FULL SPRINT CONNECTAMAJIG (INCLUDES, BARB, COMPRESSION NUT & CONNECTAMAJIG) - MONARCH XX FULLSPRINT
8	11.4318.005.000	REMOTE CONNECTAMAJIG COLLAR - BLACK - REVERB/XLOC FULL SPRINT
9	11.4318.006.010	REMOTE SERVICE KIT - XLOC FULL SPRINT (INCLUDES RATCHET WHEEL & O-RINGS) - MONARCH XX/SID/REVELATION
10	11.6818.001.000	REMOTE DISCRETE PUCK - HYDRAULIC REMOTE (SPACER) FOR XLOC REMOTES QTY2
11	11.5315.049.010	DISC BRAKE LEVER CLAMP SHIFTER MOUNTING BRACKET - (MMX) LEFT -GUIDE ULT/RSC/RS/RE/R,LEVEL ULT/TLM/TL, CODE RSC/R, DB5 ELIXIR 9/7/CR MAG/X0/ XX, QTY 1
11	11.5315.049.020	DISC BRAKE LEVER CLAMP SHIFTER MOUNTING BRACKET - (MMX) RIGHT -GUIDE ULT/RSC/RS/RE/R,LEVEL ULT/TLM/TL, CODE RSC/R, DB5 ELIXIR 9/7/CR MAG/X0/ XX, QTY 1
ns	11.4315.011.030	ROCKSHOX BLEED KIT (XLOC/TOTEM) QTY 2 (INCLUDES TWO SYRINGESAND FITTINGS, ONE TORX TOOL)
ns	00.4318.007.001	ROCKSHOX STANDARD BLEED KIT (INCLUDES 2 SYRINGES/FITTINGS, REVERB HYDRAULIC FLUID, 120ML BOTTLE NEW)
ns	11.4315.021.070	ROCKSHOX REVERB HYDRAULIC FLUID, 120ML BOTTLE - REVERB/SPRINT REMOTE
ns	11.4015.354.040	ROCKSHOX REVERB HYDRAULIC FLUID, 1 LITER BOTTLE - REVERB/SPRINT REMOTE

XLOC SPRINT MONARCH A1-A2 (2011-2018)

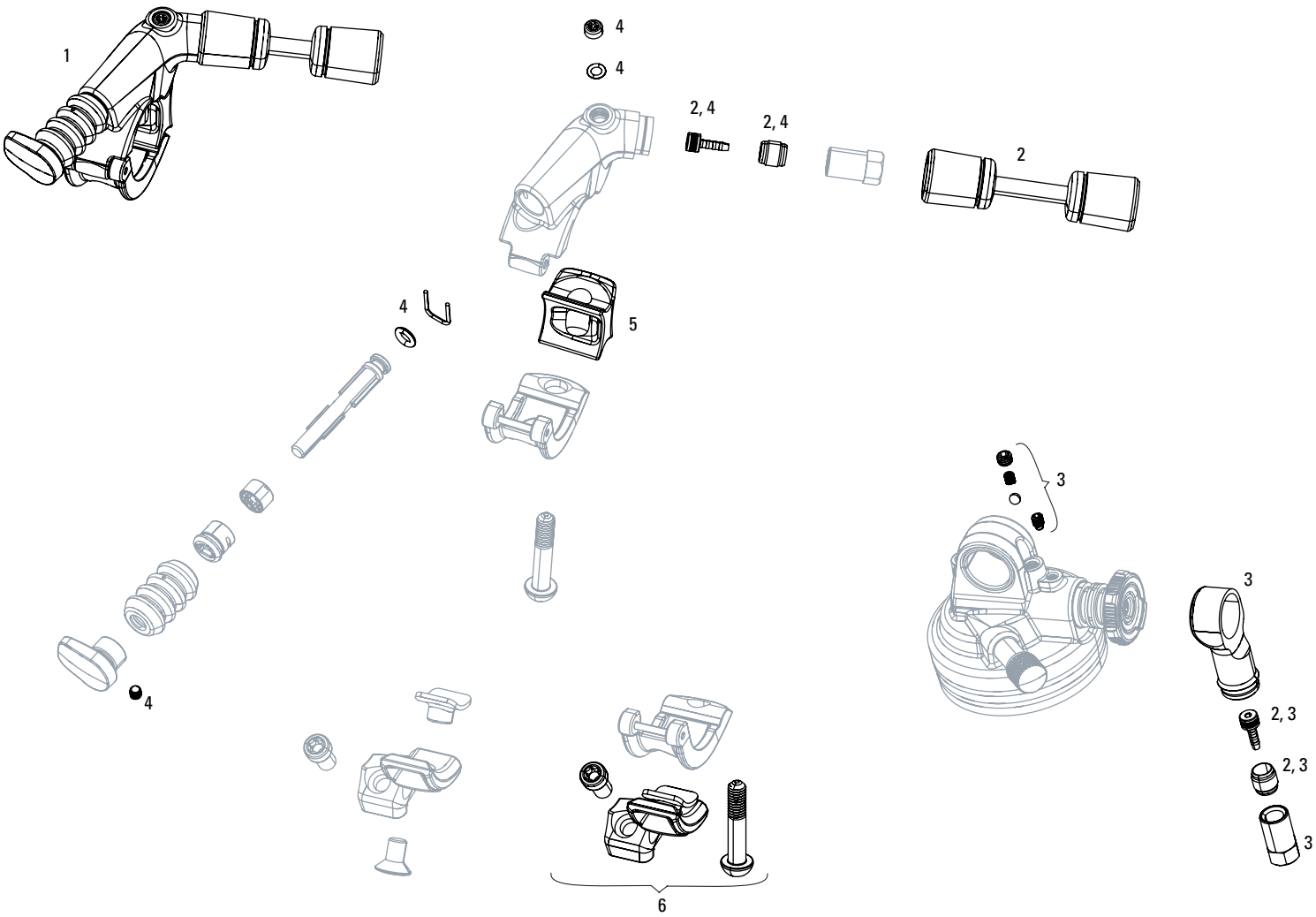

1	11.4318.000.000	REMOTE - XLOC SPRINT LEFT BLACK (INCLUDES HOSE, BARB & COMPRESSION NUT) - MONARCH XX
1	11.4318.000.010	REMOTE - XLOC SPRINT RIGHT BLACK (INCLUDES HOSE, BARB & COMPRESSION NUT) - MONARCH XX
2	11.4318.002.040	REMOTE HYDRAULIC HOSE KIT - 1250mm SPRINT (INCLUDES HOSES/BARBS/COMPRESSION NUTS)(QTY 2) -XLOC MONARCH XX
3	11.4118.002.000	REAR SHOCK HOSE FITTING KIT - (INCLUDES BANJO, COMPRESSION FITTING & THREADED BARB) - MONARCH XX
4	11.4318.001.000	REMOTE SERVICE KIT - XLOC SPRINT - MONARCH XX
5	11.6818.001.000	REMOTE DISCRETE PUCK - HYDRAULIC REMOTE (SPACER) FOR XLOC REMOTES QTY2
6	11.5315.049.010	DISC BRAKE LEVER CLAMP SHIFTER MOUNTING BRACKET - (MMX) LEFT GUIDE ULT/RSC/RS/RE/R,LEVEL ULT/TLM/TL, CODE RSC/R, DB5 EL IXIR 9/7/CR MAG/X0/ XX, QTY 1
6	11.5315.049.020	DISC BRAKE LEVER CLAMP SHIFTER MOUNTING BRACKET - (MMX) RIGHT -GUIDE ULT/RSC/RS/RE/R,LEVEL ULT/TLM/TL, CODE RSC/R, DB5 ELIXIR 9/7/CR MAG/X0/ XX, QTY 1
ns	11.4315.011.030	ROCKSHOX BLEED KIT (XLOC/TOTEM) QTY 2 (INCLUDES TWO SYRINGESAND FITTINGS, ONE TORX TOOL)
ns	00.4318.007.001	ROCKSHOX STANDARD BLEED KIT (INCLUDES 2 SYRINGES/FITTINGS, REVERB HYDRAULIC FLUID, 120ML BOTTLE NEW)
ns	11.4315.021.070	ROCKSHOX REVERB HYDRAULIC FLUID, 120ML BOTTLE - REVERB/SPRINT REMOTE
ns	11.4015.354.040	ROCKSHOX REVERB HYDRAULIC FLUID, 1 LITER BOTTLE - REVERB/SPRINT REMOTE

BULK SPARES

BULK - FOAM RINGS

11.4308.662.000	FORK FOAM RING KIT - 28MM X 9MM (QTY 20) - SID/PILOT/JUDY 2004-2006
11.4018.028.008	FORK FOAM RING KIT - 30MM X 5MM (QTY 20) - XC30/30 GOLD/30 SILVER
11.4310.697.000	FORK FOAM RING KIT - 32MM X 3.5MM (QTY 20) - SID/REBA/PIKE 2005-2006
11.4018.028.015	FORK FOAM RING KIT - 32MM X 4MM (QTY 20) - SID RLC A1/SID XX/RL B1 (2017+)/RECON BOOST RL C1/TK B1 (2020+)
11.4015.496.010	FORK FOAM RING KIT - 32MM X 5MM (QTY 20) - SID A1-A3 /REBA A2-A3/BLUTO A1/SID SL C1 (2021)
11.4310.698.000	FORK FOAM RING KIT - 32MM X 10MM (QTY 20) - REVELATION/ARGYLE/SEKTOR/TORA/RECON/XC32
11.4018.116.000	FORK FOAM RING KIT - 35MM X 4MM (QTY 20) - SID 35MM
11.4018.028.005	FORK FOAM RING KIT - 35MM X 6MM (QTY 20) - PIKE/LYRIK B1/YARI/BOXXER/DOMAIN DUAL CROWN
11.4018.116.001	FORK FOAM RING KIT - 38MM X 6MM (QTY 20) - ZEB A1 (2021)

BULK -DUST WIPERS

11.4308.658.000	FORK DUST WIPER KIT - 28mm GREY (INCLUDES FLANGED DUST WIPERS) (QTY 20) - JUDY/PILOT/SID
11.4018.028.007	FORK DUST WIPER KIT - 30mm BLACK (INCLUDES FLANGED DUST WIPERS) (QTY 20) - XC30/30 GOLD/30 SILVER/PARAGON
11.4018.028.003	FORK DUST WIPER KIT - 32mm BLACK (INCLUDES FLANGED DUST WIPERS) (QTY 20) - REVELATION A3/SID A1-A3 /REBA A1-A4
11.4018.028.010	FORK DUST WIPER KIT - 32mm BLACK (INCLUDES FLANGELESS DUST WIPERS) (QTY 20) - BLUTO/RS-1/SID B1 (2017+)/32mm BOOST™ FORKS
11.4310.695.000	FORK DUST WIPER KIT - 32mm GREY (INCLUDES FLANGED DUST WIPERS) (QTY 20) - SID/REVELATION/REBA/ARGYLE/SEKTOR/TORA/RECON/XC32
11.4310.696.000	FORK DUST WIPER KIT - 32mm GREY (INCLUDES FLANGED DUST WIPERS) (QTY 20) USE WITH 11.4311.140.000 (QTY 20) - REBA(2005-2008) / PIKE(2005-2010) / BOXXER(2006-2009)
11.4018.028.014	FORK DUST WIPER KIT - 35mm BLACK LOW FRICTION SKF (INCLUDES FLANGELESS DUST WIPERS) (QTY 20) - PIKE/LYRIK B1/YARI/BOXXER/DOMAIN/REVELATION 35MM/35G
11.4018.121.000	FORK DUST WIPER KIT - 38mm BLACK (INCLUDES FLANGELESS DUST WIPERS) (QTY 20) - ZEB 2021

BULK - MISCELLANEOUS

11.4015.259.000	FORK CRUSH WASHERS - 8MM (QTY 50)
11.4015.260.000	FORK CRUSH WASHER RETAINER - 8MM (QTY 50)
11.4015.284.000	FORK COMPRESSION PLUG - STAR NUT ALUMINUM STEER 1.125" (QTY 20)
11.4018.032.001	FORK SPRING BOTTOMLESS TOKENS - 35MM/38MM SOLO AIR/DEBONAIR (QTY 10) PIKE/BOXXER B1/LYRIK B1/YARI/SID 35MM/ZEB
11.4115.132.010	REAR SHOCK NYLON BALL - BLEED PISTON SEALHEAD- MONARCH/MONARCH PLUS, QTY 20
11.4018.071.000	FORK DAMPER SEALHEAD ASSEMBLY - CHARGER SEALHEAD (QTY 10) - PIKE A1-A2 (2014-2017)/LYRIK A1
11.4018.107.001	FORK DAMPER SEALHEAD ASSEMBLY - CHARGER 2.1 - LYRIK RCT3 B1+/RC C1+, PIKE RCT3 B1+/RC2 C1+, BOXXER RC2 C1+, LYRIK/PIKE/BOXXER SELECT/SELECT+/ULTIMATE (RC2/RCT3) C2 - BULK, QTY10
11.4018.032.005	FORK SPRING BOTTOMLESS TOKENS - 35MM/38MM DUAL POSITION AIR (QTY 10) - PIKE A1-A2/LYRIK B1+/YARI A1+/ZEB
11.4018.032.004	FORK SPRING BOTTOMLESS TOKENS - 35MM/38MM DUAL POSITION AIR (QTY 3) - PIKE A1-A2/LYRIK B1+/YARI A1+/ZEB
11.4018.032.001	FORK SPRING BOTTOMLESS TOKENS - 35MM/38MM SOLO AIR/DEBONAIR (QTY 10) PIKE/BOXXER B1/LYRIK B1/YARI/SID 35MM/ZEB
11.4018.032.000	FORK SPRING BOTTOMLESS TOKENS - 35MM/38MM SOLO AIR/DEBONAIR (QTY 3) - PIKE/BOXXER B1/LYRIK B1/YARI/SID 35MM/ZEB
11.4018.114.000	FORK SPRING BOTTOMLESS TOKENS - 35mm STEEL TUBE SOLO AIR (QTY 3) - 35 SILVER A1 (2021)
11.4018.032.003	FORK SPRING BOTTOMLESS TOKENS - SOLO AIR/DEBONAIR (QTY 5) - SID/REBA/REVELATION/RS-1/BLUTO/ARGYLE RCT SOLO AIR/35G
11.4115.132.010	REAR SHOCK NYLON BALL - BLEED PISTON SEALHEAD- MONARCH/MONARCH PLUS, QTY 20
11.4118.042.000	REAR SHOCK VOLUME REDUCER KIT - BOTTOMLESS RINGS - (INCLUDES VOLUME ADJUST RINGS, QTY 9) -MONARCH/VIVID AIR

BULK SEATPOST TACKLE BOX

11.6818.036.000	SEATPOST TACKLE BOX - REVERB A2,B1
11.6815.022.020	SEATPOST HOSE BARB - REVERB POST (QTY 10) - REVERB
11.6815.022.040	REMOTE HOSE BARB - REVERB REMOTE (QTY 10) - REVERB
11.6818.035.000	SEATPOST BRASS KEYS - SIZE 0 (QTY 12) - REVERB/REVERB STEALTH A1- B1, REVERB AXS (2020+)
11.6818.035.001	SEATPOST BRASS KEYS - SIZE 3 (QTY 12) - REVERB/REVERB STEALTH A1- B1, REVERB AXS (2020+)
11.6818.035.002	SEATPOST BRASS KEYS - SIZE 4 (QTY 12) - REVERB/REVERB STEALTH A1- B1, REVERB AXS (2020+)
11.6818.035.003	SEATPOST BRASS KEYS - SIZE 5 (QTY 12) - REVERB/REVERB STEALTH A1- B1, REVERB AXS (2020+)
11.6818.035.004	SEATPOST BRASS KEYS - SIZE 6 (QTY 12) - REVERB/REVERB STEALTH A1- B1, REVERB AXS (2020+)
11.6818.035.005	SEATPOST FOAM RING - (QTY 10) - REVERB/REVERB STEALTH A1- B1, REVERB AXS (2020+)
11.6818.035.006	SEATPOST BOTTOM OUT O-RING - (QTY 10) - REVERB/REVERB STEALTH A2-B1
11.6818.035.007	SEATPOST INNER SEALHEAD BUSHING/O-RING - (INCLUDES 10 BUSHINGS & 10 O-RINGS) - REVERB/REVERB STEALTH B1
11.6818.035.008	SEATPOST POST CLAMP KIT - (INCLUDES CLAMP NUTS & BOLTS ONLY) (QTY 6) - REVERB/REVERB STEALTH A1-B1
11.6818.035.010	SEATPOST TOP CAP KIT - BLACK (INCLUDES DUST WIPER, TOP CAP & BUSHING) (QTY 5) - REVERB/REVERB STEALTH A1-B1
11.6818.035.015	SEATPOST INNER SEALHEAD U-CUP - (INCLUDES U-CUP & TOPOUT BUMPER) (QTY 10) - REVERB STEALTH A2 & B1
11.6818.035.016	SEATPOST INNER SEALHEAD SEAL - EXTERNAL O-RING (QTY 10) - REVERB/REVERB STEALTH A2 & B1
11.6818.035.017	SEATPOST INNER SEALHEAD SEAL - INTERNAL O-RING (QTY 10) - REVERB B1
11.6818.035.018	SEATPOST MAIN PISTON SEAL - O-RING SEAL (QTY 10) - REVERB/REVERB STEALTH A2 & B1
11.6818.055.000	SEATPOST BLEED SCREW - REVERB STEALTH & REVERB REMOTE (INCLUDES BLEED SCREWS & O-RINGS) (QTY 10) REVERB REMOTE A1-A2, REVERB STEALTH A1-C1 (2011-2020)

HEADSET SPACERS - CARBON FIBER

00.4315.021.010	HEADSET SPACER SET, UD CARBON, ROCKSHOX - (5MM X 2, 10MM X 1, 15MM X 1)
00.4318.035.000	SRAM HEADSET SPACER SET, UD CARBON, GLOSS BLACK LOGO (2.5MM X 2, 5MM X 1, 10MM X 1, 20MM X 1)
00.4318.035.001	SRAM HEADSET SPACER SET, UD CARBON, GLOSS WHITE LOGO (2.5MM X 2, 5MM X 1, 10MM X 1, 20MM X 1)
00.4318.036.000	ROCKSHOX HEADSET SPACER SET, UD CARBON, GLOSS BLACK LOGO (2.5MM X 2, 5MM X 1, 10MM X 1, 20MM X 1)
00.4318.036.001	ROCKSHOX HEADSET SPACER SET, UD CARBON, GLOSS WHITE LOGO (2.5MM X 2, 5MM X 1, 10MM X 1, 20MM X 1)

SERVICE KITS

FORK SERVICE KITS

00.4315.032.010	AM FORK SERVICE KIT, BASIC (INCLUDES DUST SEALS, FOAM RINGS,O-RING SEALS) - RECON SILVER COIL (2012)
00.4315.032.020	AM FORK SERVICE KIT, BASIC (INCLUDES DUST SEALS, FOAM RINGS,O-RING SEALS) - RECON SILVER SOLO AIR (2012)
00.4315.032.030	AM FORK SERVICE KIT, BASIC (INCLUDES DUST SEALS, FOAM RINGS,O-RING SEALS) - RECON GOLD COIL (2012-2016)
00.4315.032.040	AM FORK SERVICE KIT, BASIC (INCLUDES DUST SEALS, FOAM RINGS,O-RING SEALS) - RECON GOLD SOLO AIR (2012-2016)
00.4315.032.050	AM FORK SERVICE KIT, BASIC (INCLUDES DUST SEALS, FOAM RINGS,O-RING SEALS) - SEKTOR TURNKEY DUAL POSITION COIL (2012)
00.4315.032.060	AM FORK SERVICE KIT, BASIC (INCLUDES DUST SEALS, FOAM RINGS,O-RING SEALS) - SEKTOR RL DUAL POSITION COIL (2012-2016)
00.4315.032.070	AM FORK SERVICE KIT, BASIC (INCLUDES DUST SEALS, FOAM RINGS,O-RING SEALS) - SEKTOR RL SOLO AIR (2012-2016)
00.4315.032.080	AM FORK SERVICE KIT, BASIC (INCLUDES DUST SEALS, FOAM RINGS,O-RING SEALS) - REBA (2012-2014) AND SID (2012-2014)
00.4315.032.090	AM FORK SERVICE KIT, BASIC (INCLUDES DUST SEALS, FOAM RINGS, O-RING SEALS) - LYRIK COIL (2012-2015)
00.4315.032.100	AM FORK SERVICE KIT, BASIC (INCLUDES DUST SEALS, FOAM RINGS, O-RING SEALS) - LYRIK SOLO AIR (2012-2015)
00.4315.032.110	AM FORK SERVICE KIT, BASIC (INCLUDES DUST SEALS, FOAM RINGS, O-RING SEALS) - LYRIK DUAL POSITION AIR (2012-2015)
00.4315.032.120	AM FORK SERVICE KIT, BASIC (INCLUDES DUST SEALS, FOAM RINGS,O-RING SEALS) - TOTEM COIL (2012-2014)
00.4315.032.130	AM FORK SERVICE KIT, BASIC (INCLUDES DUST SEALS, FOAM RINGS,O-RING SEALS) - TOTEM SOLO AIR (2012-2014)
00.4315.032.150	AM FORK SERVICE KIT, BASIC (INCLUDES DUST SEALS, FOAM RINGS,O-RING SEALS) - BOXXER RC (2012-2016)
00.4315.032.160	AM FORK SERVICE KIT, BASIC (INCLUDES DUST SEALS, FOAM RINGS,O-RING SEALS) - BOXXER R2C2 (2012-2014)
00.4315.032.170	AM FORK SERVICE KIT, BASIC (INCLUDES DUST SEALS, FOAM RINGS,O-RING SEALS) - BOXXER WORLD CUP (2012-2014)
00.4315.032.180	AM FORK SERVICE KIT, BASIC (INCLUDES DUST SEALS, FOAM RINGS,O-RING SEALS) - REVELATION DUAL AIR (2012)
00.4315.032.200	AM FORK SERVICE KIT, BASIC (INCLUDES DUST SEALS, FOAM RINGS,O-RING SEALS) - ARGYLE COIL (2012-2016)
00.4315.032.210	AM FORK SERVICE KIT, BASIC (INCLUDES DUST SEALS, FOAM RINGS,O-RING SEALS) - ARGYLE SOLO AIR (2012-2016)
00.4315.032.230	AM FORK SERVICE KIT, BASIC (INCLUDES DUST SEALS, FOAM RINGS,O-RING SEALS) - DOMAIN (2012-2016)/DOMAIN DUAL CROWN
00.4315.032.280	AM FORK SERVICE KIT, BASIC (INCLUDES DUST SEALS, FOAM RINGS,O-RING SEALS) - RECON SILVER (2013-2015)
00.4315.032.300	AM FORK SERVICE KIT, BASIC (INCLUDES DUST SEALS, FOAM RINGS,O-RING SEALS) - SEKTOR TURNKEY SOLO AIR (2013-2016)
00.4315.032.310	AM FORK SERVICE KIT, BASIC (INCLUDES DUST SEALS, FOAM RINGS,O-RING SEALS) - SEKTOR MOTION CONTROL SOLOAIR (2013-2016)
00.4315.032.320	AM FORK SERVICE KIT, BASIC (INCLUDES DUST SEALS, FOAM RINGS,O-RING SEALS) - REVELATION DUAL POSITION AIR (2012-2013)
00.4315.032.350	AM FORK SERVICE KIT, BASIC (INCLUDES DUST SEALS, FOAM RINGS,O-RING SEALS) - PIKE SOLO AIR
00.4315.032.360	AM FORK SERVICE KIT, BASIC (INCLUDES DUST SEALS, FOAM RINGS,O-RING SEALS) - PIKE DUAL POSITION AIR
00.4315.032.400	AM FORK SERVICE KIT, BASIC (INCLUDES DUST SEALS, FOAM RINGS,O-RING SEALS) - 30 GOLD A1(2014-2016)
00.4315.032.410	AM FORK SERVICE KIT, BASIC (INCLUDES DUST SEALS, FOAM RINGS,O-RING SEALS) - XC32 SOLO AIR A3/RECON SILVER B1
00.4315.032.420	AM FORK SERVICE KIT, BASIC (INCLUDES DUST SEALS, FOAM RINGS,O-RING SEALS) - REBA A3 (2014-2016)
00.4315.032.430	AM FORK SERVICE KIT, BASIC (INCLUDES DUST SEALS, FOAM RINGS,O-RING SEALS) - SID A3 (2014-2016)
00.4315.032.440	AM FORK SERVICE KIT, BASIC (INCLUDES DUST SEALS, FOAM RINGS,O-RING SEALS) - REVELATION SOLO AIR A3 (2014-2016)
00.4315.032.450	AM FORK SERVICE KIT, BASIC (INCLUDES DUST SEALS, FOAM RINGS,O-RING SEALS) - REVELATION DUAL POSITION AIR A3 (2014-2016)
00.4315.032.460	AM FORK SERVICE KIT, BASIC (INCLUDES DUST SEALS, FOAM RINGS,O-RING SEALS) - RECON GOLD A3(2013-2016)
00.4315.032.470	AM FORK SERVICE KIT, BASIC (INCLUDES DUST SEALS, FOAM RINGS,O-RING SEALS) - SEKTOR SILVER SOLO AIR A1
00.4315.032.490	AM FORK SERVICE KIT, BASIC (INCLUDES DUST SEALS, FOAM RINGS,O-RING SEALS) - BLUTO A1
00.4315.032.500	AM FORK SERVICE KIT, BASIC (INCLUDES DUST SEALS, FOAM RINGS,O-RING SEALS) - RS1
00.4315.032.510	AM FORK SERVICE KIT, BASIC (INCLUDES DUST SEALS, FOAM RINGS,O-RING SEALS) - BOXXER TEAM CHARGER DAMPER
00.4315.032.520	AM FORK SERVICE KIT, BASIC (INCLUDES DUST SEALS, FOAM RINGS,O-RING SEALS) - BOXXER WC CHARGER DAMPER
00.4315.032.530	AM FORK SERVICE KIT, BASIC (INCLUDES DUST SEALS, FOAM RINGS,O-RING SEALS) - PARAGON GOLD SOLO AIR A1
00.4315.032.550	AM FORK SERVICE KIT, BASIC (INCLUDES DUST SEALS, FOAM RINGS,O-RING SEALS) - PIKE DJ
00.4315.032.560	AM FORK SERVICE KIT, BASIC (INCLUDES DUST SEALS, FOAM RINGS,O-RING SEALS) - PARAGON SILVER COIL A1
00.4315.032.580	AM FORK SERVICE KIT, BASIC (INCLUDES DUST SEALS, FOAM RINGS,O-RING SEALS) - LYRIK RCT3 SA A1
00.4315.032.590	AM FORK SERVICE KIT, BASIC (INCLUDES DUST SEALS, FOAM RINGS,O-RING SEALS) - LYRIK RCT3 2P A1
00.4315.032.600	AM FORK SERVICE KIT, BASIC (INCLUDES DUST SEALS, FOAM RINGS,O-RING SEALS) - YARI SA A1
00.4315.032.610	AM FORK SERVICE KIT, BASIC (INCLUDES DUST SEALS, FOAM RINGS,O-RING SEALS) - YARI 2P A1
00.4315.032.611	AM FORK SERVICE KIT BASIC (INCLUDES DUST SEALS, FOAM RINGS, O-RING SEALS) - REBA 15X100 BOOST A5-A6 (2016-2017)
00.4315.032.612	AM FORK SERVICE KIT, BASIC (INCLUDES DUST SEALS, FOAM RINGS,O-RING SEALS) - SID 2927+B A3
00.4315.032.624	AM FORK SERVICE KIT, BASIC (INCLUDES DUST SEALS, FOAM RINGS,O-RING SEALS, SA SEALHEAD) - REVELATION A5 (NON BOOST)
00.4315.032.625	AM FORK SERVICE KIT, BASIC (INCLUDES DUST SEALS, FOAM RINGS,O-RING SEALS, SA SEALHEAD) - REVELATION A5 (BOOST)
00.4315.032.626	AM FORK SERVICE KIT, BASIC (INCLUDES DUST SEALS, FOAM RINGS,O-RING SEALS) - RECON SILVER RL B1+ (NON BOOST) (2017-2021)
00.4315.032.627	AM FORK SERVICE KIT, BASIC (INCLUDES DUST SEALS, FOAM RINGS,O-RING SEALS) - RECON SILVER TK C1+ (NON BOOST) (2017-2021)
00.4315.032.628	AM FORK SERVICE KIT, BASIC (INCLUDES DUST SEALS, FOAM RINGS,O-RING SEALS) - RECON SILVER RL B1+ (BOOST) (2017-2021)
00.4315.032.629	AM FORK SERVICE KIT, BASIC (INCLUDES DUST SEALS, FOAM RINGS,O-RING SEALS) - RECON SILVER TK C1+ (BOOST) (2017-2021)
00.4315.032.630	AM FORK SERVICE KIT, BASIC (INCLUDES DUST SEALS, FOAM RINGS,O-RING SEALS) - SEKTOR SILVER RL A2 (NON BOOST)
00.4315.032.631	AM FORK SERVICE KIT, BASIC (INCLUDES DUST SEALS, FOAM RINGS,O-RING SEALS) - SEKTOR SILVER RL A2 (BOOST), RECON BOOST TK B1/RL B1 (2020+)
00.4315.032.613	200 HOUR/1 YEAR SERVICE KIT (INCLUDES DUST SEALS, FOAM RINGS, O-RING SEALS, DAMPER SEALHEAD) - SID XX/RL B1 (2017)
00.4315.032.618	200 HOUR/1 YEAR SERVICE KIT (INCLUDES DUST SEALS, FOAM RINGS, O-RING SEALS, CHARGER SEALHEAD, DPA SEALHEAD) - PIKE DUALPOSITION AIR A1
00.4315.032.619	200 HOUR/1 YEAR SERVICE KIT (INCLUDES DUST SEALS, FOAM RINGS, O-RING SEALS, CHARGER SEALHEAD, SA SEALHEAD) - PIKE/PIKE DJ SOLO AIR A1
00.4315.032.620	200 HOUR/1 YEAR SERVICE KIT (INCLUDES DUST SEALS, FOAM RINGS, O-RING SEALS, CHARGER SEALHEAD, DPA SEALHEAD) - LYRIK/PIKE 29+ DUAL POSITION AIR A1 (2016-2017)
00.4315.032.621	200 HOUR/1 YEAR SERVICE KIT (INCLUDES DUST SEALS, FOAM RINGS, O-RING SEALS, CHARGER SEALHEAD, SA SEALHEAD) - LYRIK/PIKE29+ SOLO AIR A1(2016-2017)
00.4315.032.623	200 HOUR/1 YEAR SERVICE KIT (INCLUDES DUST SEALS, FOAM RINGS, O-RING SEALS, SA SEALHEAD) - YARI RC SOLO AIR A1-B1 (2016-2018)
00.4315.032.632	200 HOUR/1 YEAR SERVICE KIT (INCLUDES DUST SEALS, FOAM RINGS, O-RING SEALS) - REBA A7 80-100MM (BOOST™& STANDARD) 120MM (BOOST) (2018+)
00.4315.032.633	200 HOUR/1 YEAR SERVICE KIT (INCLUDES DUST SEALS, FOAM RINGS, O-RING SEALS) - REBA A7 120MM (STANDARD) (2018+)
00.4315.032.634	200 HOUR/1 YEAR SERVICE KIT (INCLUDES DUST SEALS, FOAM RINGS, O-RING SEALS) - REBA A7 130-150MM (STANDARD) (2018+), REBA 26 80-140MM (2020+)
00.4315.032.635	200 HOUR/1 YEAR SERVICE KIT (INCLUDES DUST SEALS, FOAM RINGS, O-RING SEALS) - REBA A7 130-150MM (BOOST) (2018+)
00.4315.032.640	200 HOUR/1 YEAR SERVICE KIT (INCLUDES DUST SEALS, FOAM RINGS, O-RING SEALS) - BLUTO RL/RCT3 (2017+)
00.4315.032.641	200 HOUR/1 YEAR SERVICE KIT (INCLUDES DUST SEALS, FOAM RINGS, O-RING SEALS, CHARGER 2 SEALHEAD, SA SEALHEAD) - RS1 RLC/RL A1 (2018+)
00.4315.032.642	200 HOUR/1 YEAR SERVICE KIT (INCLUDES DUST SEALS, FOAM RINGS, O-RING SEALS) - REVELATION MOTION CONTROL RC A1 (2018)
00.4315.032.644	200 HOUR/1 YEAR SERVICE KIT (INCLUDES DUST SEALS, FOAM RINGS, O-RING SEALS, CHARGER 2 SEALHEAD,DEBONAIR SEALS) - LYRIK B1/PIKE 29+ B1(2018)
00.4315.032.645	200 HOUR/1 YEAR SERVICE KIT (INCLUDES DUST SEALS, FOAM RINGS, O-RING SEALS, CHARGER 2 SEALHEAD, DUAL POSITION SEALS) - LYRIK B1/PIKE 29+ (2018+)
00.4315.032.646	200 HOUR/1 YEAR SERVICE KIT (INCLUDES DUST SEALS, FOAM RINGS, O-RING SEALS, CHARGER 2 SEALHEAD,DEBONAIR SEALS) - PIKE B1 (2018)
00.4315.032.647	200 HOUR/1 YEAR SERVICE KIT (INCLUDES DUST SEALS, FOAM RINGS, O-RING SEALS, CHARGER 2 SEALHEAD, DUAL POSITION SEALS) - PIKE B1 (2018+)
00.4315.032.648	200 HOUR/1 YEAR SERVICE KIT (INCLUDES DUST SEALS, FOAM RINGS, O-RING SEALS) -JUDY GOLD AND SILVER A1+ (2018+)
00.4315.032.649	200 HOUR/1 YEAR SERVICE KIT (INCLUDES DUST SEALS, FOAM RINGS, O-RING SEALS) - 30 GOLD AND SILVER (2018+)
00.4315.032.650	200 HOUR/1 YEAR SERVICE KIT (INCLUDES DUST SEALS, FOAM RINGS, O-RING SEALS) - RECON RL/TK A1-A2 (NON BOOST) (2018-2020)
00.4315.032.651	200 HOUR/1 YEAR SERVICE KIT (INCLUDES DUST SEALS, FOAM RINGS, O-RING SEALS) - SEKTOR SILVER RL A2, RECON RL/TK A1-B1 (BOOST) (2018-2020)
00.4315.032.652	200 HOUR/1 YEAR SERVICE KIT (INCLUDES DUST SEALS, FOAM RINGS, O-RING SEALS) - RECON GOLD RL A4 (2018+)
00.4315.032.653	200 HOUR/1 YEAR SERVICE KIT (INCLUDES DUST SEALS, FOAM RINGS, O-RING SEALS) - RECON GOLD RL BOOST A4 (2018+)/SEKTOR RL C1 (2019+)
00.4318.025.020	200 HOUR/1 YEAR SERVICE KIT (INCLUDES DUST SEALS, FOAM RINGS, O-RING SEALS, CHARGER 2 SEALHEAD, ALUMINUM DEBONAIR SEALHEAD) - LYRIK RC2 C1 (2019+)
00.4318.025.030	200 HOUR/1 YEAR SERVICE KIT (INCLUDES DUST SEALS, FOAM RINGS, O-RING SEALS, DAMPER SEALHEAD, AIR SPRING SEALHEAD) - BOXXER RC2 C1 (2019)
00.4318.025.040	200 HOUR/1 YEAR SERVICE KIT (INCLUDES DUST SEALS, FOAM RINGS, O-RING SEALS, DAMPER SEALHEAD, AIR SPRING SEALHEAD) - BOXXER RC C1 (2019)
00.4318.025.050	200 HOUR/1 YEAR SERVICE KIT (INCLUDES DUST SEALS, FOAM RINGS, O-RINGS SEALS) - 35 GOLD RL A1 (2020+)
00.4318.025.060	200 HOUR/1 YEAR SERVICE KIT (INCLUDES DUST SEALS, FOAM RINGS, O-RING SEALS, CHARGER RL SEALHEAD) SID SELECT B4 (2020), SID SL SELECT C1 (2021)
00.4318.025.070	200 HOUR/1 YEAR SERVICE KIT (INCLUDES DUST SEALS, FOAM RINGS, O-RING SEALS, CHARGER 2 RL SEALHEAD) -SID RL B2 80-100MM (2018+)/SELECT + B4 80-100MM (2020), SID SL SELECT+ C1 (2021)
00.4318.025.080	200 HOUR/1 YEAR SERVICE KIT (INCLUDES DUST SEALS, FOAM RINGS, O-RING SEALS, CHARGER 2 RLC SEALHEAD) - SID RLC A1+ (2017-2019)/ULTIMATE B4 (2020)
00.4318.025.110	200 HOUR/1 YEAR SERVICE KIT (INCLUDES DUST SEALS, FOAM RINGS, O-RING SEALS, CHARGER 2 RL SEALHEAD) -SID RL B2 110-120MM (2018+)/SELECT + B4 110-120MM (2020)
00.4318.025.120	200 HOUR/1 YEAR SERVICE KIT (INCLUDES DUST SEALS, FOAM RINGS, O-RING SEALS, CHGR2.1 DAMPER SEALHEAD, DB AIR SPRING SEALHEAD) - LYRIK C2/PIKE B3 SEL+ AND ULT (2020)
00.4318.025.130	200 HOUR/1 YEAR SERVICE KIT (INCLUDES DUST SEALS, FOAM RINGS, O-RING SEALS, CHGR2.1 DAMPER SEALHEAD, DB AIR SPRING SEALHEAD) - BOXXER ULT C2 (2020)
00.4318.025.140	200 HOUR/1 YEAR SERVICE KIT (INCLUDES DUST SEALS, FOAM RINGS, O-RING SEALS, CHARGER RC DAMPER SEALHEAD, DB AIR SPRING SEALHEAD) - BOXXER SELECT C2 (2020)
00.4318.025.150	200 HOUR/1 YEAR SERVICE KIT (INCLUDES DUST SEALS, FOAM RINGS, O-RINGS SEALS) - 35 SILVER R/TK A1 (2021)
00.4318.025.160	200 HOUR/1 YEAR SERVICE KIT (INCLUDES DUST SEALS, FOAM RINGS, O-RING SEALS, CHARGER RL SEALHEAD) SID 35MM SELECT C1 (2021)
00.4318.025.170	200 HOUR/1 YEAR SERVICE KIT (INCLUDES DUST SEALS, FOAM RINGS, O-RING SEALS, SELECT+ CHARGER SEALHEAD) SID 35MM SELECT+ C1/SID 35MM ULTIMATE (2021)
00.4318.025.180	200 HOUR/1 YEAR SERVICE KIT (INCLUDES DUST SEALS, FOAM RINGS, O-RINGS, DAMPER SEALHEAD, DB C1 SEALHD)-YARI CHRC B1+/RC B2-B3/PIKE B3+/LYRIK C2+ SELECT/REVELATION CHRC A1+/RC A2-A3
00.4318.025.181	200 HOUR/1 YEAR SERVICE KIT (INCLUDES DUST SEALS, FOAM RINGS, O-RING SEALS, CHRC DAMPER SEALHEAD, DB AIR SPRING SEALHEAD) - ZEB R/SELECT A1 (2021)
00.4318.025.182	200 HOUR/1 YEAR SERVICE KIT (INCLUDES DUST SEALS, FOAM RINGS, O-RING SEALS, CHGR2 DAMPER SEALHEAD, DB AIR SPRING SEALHEAD) - ZEB SELECT+/ULTIMATE A1 (2021)
00.4318.025.183	200 HOUR/1 YEAR SERVICE KIT (INCLUDES DUST SEALS, FOAM RINGS, O-RING SEALS, CHRC DAMPER SEALHEAD, DUAL POSITION AIR SPRING SEALHEAD) - (DPA ONLY) ZEB R/SELECT A1 (2021)

SERVICE KITS

REAR SHOCK SERVICE KITS

00.4315.032.220	AM REAR SHOCK SERVICE KIT, BASIC (INCLUDES AIR CAN SEALS ONLY) - VIVID AIR (2012-2013)
00.4315.032.230	AM FORK SERVICE KIT, BASIC (INCLUDES DUST SEALS, FOAM RINGS,O-RING SEALS) - DOMAIN (2012-2016)/DOMAIN DUAL CROWN
00.4315.032.240	AM REAR SHOCK AIR CAN SERVICE KIT, BASIC - (INCLUDES SEAL GREASE/OIL) - MONARCH/MONARCH PLUS (2012)
00.4315.032.250	AM REAR SHOCK AIR CAN HIGH VOLUME SERVICE KIT, BASIC - (INCLUDES SEAL GREASE/OIL) - MONARCH/MONARCH PLUS (2012)
00.4315.032.260	AM REAR SHOCK AIR CAN SERVICE KIT, BASIC - (INCLUDES SEAL GREASE/OIL) - ARIO/(MONARCH 2008-2010)
00.4315.032.330	AM REAR SHOCK AIR CAN SERVICE KIT, BASIC - (INCLUDES SEAL GREASE/OIL) - MONARCH RT3 (2013)
00.4315.032.340	AM REAR SHOCK AIR CAN HIGH VOLUME SERVICE KIT, BASIC - (INCLUDES SEAL GREASE/OIL) - MONARCH RT3 (2013)
00.4315.032.370	AM REAR SHOCK AIR CAN SERVICE KIT, BASIC - VIVID AIR B1 (2014-2015)
00.4315.032.380	AM REAR SHOCK AIR CAN SERVICE KIT, BASIC - (INCLUDES SEAL GREASE/OIL) - MONARCH B1 (PLUS,XX,RL) C1 (R,RT3) D1 (2014+)
00.4315.032.390	AM REAR SHOCK AIR CAN SERVICE KIT, BASIC - (INCLUDES SEAL GREASE/OIL) - MONARCH HIGH VOLUME B1 (PLUS,XX,RL) C1 (R,RT3) (2014+)
00.4315.032.480	AM REAR SHOCK AIR CAN SERVICE KIT, BASIC - (INCLUDES SEAL GREASE/OIL) - MONARCH AUTO SAGB1 (2014+)
00.4315.032.540	AM REAR SHOCK AIR CAN SERVICE KIT, BASIC - (INCLUDES SEAL GREASE/OIL) - MONARCH DEBONAIR (2014+)
00.4315.032.615	50 HOUR SERVICE KIT (INCLUDES AIR CAN SEALS, PISTON SEAL, GLIDE RINGS, SEAL GREASE/OIL) - DELUXE/SUPER DELUXE A1-B2 (2017-2020)
00.4315.032.617	200 HOUR/1 YEAR SERVICE KIT (INCLUDES AIR CAN SEALS, PISTON SEAL, GLIDE RINGS, IFP SEALS, RESERVOIR SEALS, SEAL GREASE/OIL) - SUPER DELUXE A1-B2 (2017-2020)
00.4315.032.637	200 HOUR/1 YEAR SERVICE KIT (INCLUDES AIR CAN SEALS, PISTON SEAL, GLIDE RINGS, IFP SEALS, REMOTE SPARES) - SUPER DELUXE REMOTE A1-B2 (2018-2020)
00.4315.032.638	200 HOUR/1 YEAR SERVICE KIT (INCLUDES SEALHEAD SEALS, PISTON SEAL, GLIDE RINGS, IFP SEALS, REMOTE SPARES) - SUPER DELUXE COIL/COIL REMOTE A1-A2 (2018-2020)
00.4315.032.639	200 HOUR/1 YEAR SERVICE KIT (INCLUDES SEALHEAD SEALS, PISTON SEAL, GLIDE RINGS, IFP SEALS) - SUPER DELUXE COIL A1-A2 (2018-2020)
00.4318.037.000	50 HOUR SERVICE KIT (INCLUDES AIR CAN SEALS, PISTON SEAL, GLIDE RINGS, SEAL GREASE/OIL) - SIDLUXE A1 (2020)
00.4318.037.001	200 HOUR/1 YEAR SERVICE KIT (INCLUDES AIR CAN SEALS, PISTON SEAL, GLIDE RINGS, IFP SEALS, REMOTE SPARES, SEAL GREASE/OIL) - DELUXE/DELUXE RMT A1-B2 (2017-2020)/DELUXE NUDE B1+
00.4318.037.002	200 HOUR/1 YEAR SERVICE KIT (INCLUDES AIR CAN SEALS, PISTON SEAL, GLIDE RINGS, IFP SEALS, SEAL GREASE/OIL) - SIDLUXE A1 (2020)

SEATPOST SERVICE KITS

11.6815.015.010	REMOTE SERVICE KIT - REVERB
11.6818.048.000	REMOTE SERVICE KIT - (INCLUDES BOOT, PADDLE, & BARB) - REVERB 1X REMOTE B1
11.6818.003.010	SEATPOST SERVICE KIT - FULL SERVICE (INCLUDES NEW, UPGRADED IFP; REQUIRES POST BLEED TOOL, OIL HEIGHT TOOL & IFP HEIGHT TOOL) - REVERB A1(2010-2012)
11.6818.031.000	SEATPOST SERVICE KIT - 200 HOUR/1 YEAR SERVICE (INCLUDES FOAM RING, INNER SEALHEAD BUSHING & O-RINGS) - REVERB B1/REVERB STEALTH B1(2017-2019)
11.6818.031.001	SEATPOST SERVICE KIT - 400 HOUR/2 YEAR SERVICE (INCLUDES NEW, UPGRADED IFP; REQUIRES POST BLEED TOOL, OIL HEIGHT TOOL & IFP HEIGHT TOOL) REVERB STEALTH B1 (2017-2019)
11.6818.031.002	SEATPOST SERVICE KIT - 400 HOUR/2 YEAR SERVICE (INCLUDES NEW, UPGRADED IFP; REQUIRES POST BLEED TOOL, OIL HEIGHT TOOL & IFP HEIGHT TOOL) REVERB B1(2017-2019)
11.6818.031.004	SEATPOST SERVICE KIT - 200 HOUR/1 YEAR SERVICE (INCLUDES NEW, UPGRADED IFP; REQUIRES OIL LEVEL ADJUSTER) - REVERB STEALTHA2 (2013-2016)
11.6818.031.005	SEATPOST SERVICE KIT - 200 HOUR/1 YEAR SERVICE (INCLUDES NEW, UPGRADED IFP; REQUIRES POST BLEED TOOL, OIL HEIGHT TOOL &OIL LEVEL ADJUSTER) - REVERB A2 (2013-2016)
11.6818.051.000	SEATPOST SERVICE KIT - 200 HOUR/1 YEAR SERVICE (INCLUDES FOAM RING, TOPCAP ASSEMBLY, INNER SEALHEAD BUSHING, & O-RINGS) - REVERB AXS
11.6818.051.001	SEATPOST SERVICE KIT - 600 HOUR/3 YEAR SERVICE (INCLUDES IFP, SEALHEAD ASSEMBLY, AND TOPCAP ASSEMBLY; REQUIRES OIL HEIGHT TOOL & IFP HEIGHT TOOL) REVERB AXS
11.6818.051.002	SEATPOST SERVICE KIT - 200 HOUR/1 YEAR SERVICE (INCLUDES FOAM RING, COLLAR, INNER SEALHEAD BUSHING, & O-RING) - REVERB STEALTH C1
11.6818.051.003	SEATPOST SERVICE KIT - 600 HOUR/3 YEAR SERVICE (INCLUDES IFP, SEALHEAD ASSEMBLY, AND COLLAR ASSEMBLY; REQUIRES OIL HEIGHT TOOL & IFP HEIGHT TOOL) REVERB STEALTH C1

UPGRADE KITS

UPGRADE KITS

00.4318.045.000	FORK DUST WIPER UPGRADE KIT - 30MM BLACK FLANGED LOW FRICTION SEALS (INCLUDES DUST WIPERS, 5MM & 10MM FOAM RINGS) - XC30/30GOLD/30SILVER/PARAGON/PSYLO/DUKE
00.4318.045.001	FORK DUST WIPER UPGRADE KIT - 30MM BLACK FLANGELESS LOW FRICTION SEALS (INCLUDES DUST WIPERS & 10MM FOAM RINGS) - JUDY SILVER/JUDY GOLD (BOOST™ FORKS)
00.4318.045.002	FORK DUST WIPER UPGRADE KIT - 32MM BLACK FLANGED LOW FRICTION SEALS (INCLUDES DUST WIPERS, 5MM & 10MM FOAM RINGS) - SID/REVELATION/REBA/ARGLE/SEKTOR/TORA/RECON/XC32
00.4318.045.003	FORK DUST WIPER UPGRADE KIT - 32MM BLACK FLANGELESS ULTRA-LOW FRICTION SKF SEALS (INCLUDES DUST WIPERS & 4MM FOAM RINGS) - BLUTO/RS-1/SID B1 (2017+)/32MM BOOST™ FORKS
00.4318.045.004	FORK DUST WIPER UPGRADE KIT - 35MM BLACK FLANGELESS ULTRA-LOW FRICTION SKF SEALS (INCLUDES DUST WIPERS, 4MM & 6MM FOAM RINGS-PIKE/LYRIKB1/YARI/REVELATION/BOXXER/DOMAIN/35/SID35MM
00.4318.045.005	FORK DUST WIPER UPGRADE KIT - 38MM BLACK FLANGELESS ULTRA-LOW FRICTION SKF SEALS (INCLUDES DUST WIPERS & 6MM FOAM RINGS) - ZEB (A+/2021+)
00.4318.002.000	REMOTE UPGRADE KIT - TURNKEY 17MM - INCLUDES REMOTE COMPRESSION DAMPER AND POPLOC REMOTE RIGHT- RECON SILVER (2010-2015)
00.4318.002.007	REMOTE UPGRADE KIT - TURNKEY 17MM - INCLUDES REMOTE COMPRESSION DAMPER AND POPLOC REMOTE RIGHT 32MM SEKTOR SILVER/XC32/RECON SILVER B1
00.4318.002.008	REMOTE UPGRADE KIT - TURNKEY 30MM PARAGON GOLD - TURNKEY - INCLUDES REMOTE COMPRESSION DAMPER AND POPLOC REMOTE RIGHT (2015-2016)
00.4318.002.009	REMOTE - ONELOC LEFT/ABOVE, RIGHT/BELOW 10MM, REMOTE ONLY (INCLUDES REMOTE, CABLE&HOUSING)-SID,REBA,REVELATION,BLUTO,SEKTOR,RECONGOLD(2013-2017)/JUDY
00.4318.002.010	REMOTE - ONELOC RIGHT/ABOVE, LEFT/BELOW 10MM, REMOTE ONLY (INCLUDES REMOTE, CABLE&HOUSING)-SID,REBA,REVELATION,BLUTO,SEKTOR,RECONGOLD(2013-2017)/JUDY
00.4318.002.011	REMOTE UPGRADE KIT - ONELOC RIGHT/ABOVE, LEFT/BELOW 10MM MCRL DAMPER PUSH TO CLOSE (INCLUDES REMOTE, COMP DAMPER, CABLE&HOUSING)-RECONGOLD/SEKTORGOLD(2013 -2016)
00.4318.002.014	REMOTE UPGRADE KIT - ONELOC RIGHT/ABOVE, LEFT/BELOW 10MM MCRL DAMPER PUSH TO CLOSE (INCLUDES REMOTE, COMP DAMPER, CABLE&HOUSING)-30 GOLD(2014 -2017)
00.4318.002.015	REMOTE UPGRADE KIT - ONELOC RIGHT/ABOVE, LEFT/BELOW 10MM MCRL DAMPER PUSH TO CLOSE (INCLUDES REMOTE, COMP DAMPER, CABLE&HOUSING)-RECONSILVERB1/(SEKTORSILVER BOOST ONLY)(2017)
00.4318.002.017	REMOTE UPGRADE KIT - ONELOC RIGHT/ABOVE, LEFT/BELOW 10MM MCRL DAMPER PUSH TO CLOSE (INCLUDES REMOTE, COMP DAMPER, CABLE&HOUSING)-RECONGOLD/SEKTORGOLD(2013-2017)
00.4318.002.019	REMOTE UPGRADE KIT- ONELOC RIGHT/ABOVE, LEFT/BELOW 10MM MC RLT DAMPER PUSH TO LOCK (INCLUDES REMOTE, COMP DAMPER, CABLE& HOUSING) -SIDB/REBA/BLUTO(2012-2017)
00.4318.002.020	REMOTE UPGRADE KIT - ONELOC RIGHT/ABOVE, LEFT/BELOW 10MM MCRL DAMPER PUSH TO LOCK (INCLUDES REMOTE, COMP DAMPER, CABLE&HOUSING) - PARAGON GOLD
00.4318.002.021	REMOTE UPGRADE KIT - ONELOC RIGHT/ABOVE, LEFT/BELOW 10MM MC RL DAMPER PUSH TO LOCK (INCLUDES REMOTE, COMP DAMPER, CABLE&HOUSING) - 35 GOLD A1+ (2020+)
00.4318.004.001	REMOTE UPGRADE KIT - XLOC FULL SPRINT - INCLUDES MOTION CONTROL X DNA COMP DAMPER, REAR SHOCK HYDRAULIC HOSE, BLEED SYRINGES, LEFT, MMX, BLACK - SIDB (2011-2016)
00.4318.004.002	REMOTE UPGRADE KIT - XLOC FULL SPRINT - INCLUDES MOTION CONTROL X DNA COMP DAMPER, REAR SHOCK HYDRAULIC HOSE, BLEED SYRINGES, RIGHT, MMX, BLACK - SIDB (2011-2016)
00.4018.783.000	DAMPER UPGRADE KIT - CHARGER - (INCLUDES COMPLETE RIGHT SIDE INTERNALS) - BOXXER (A1-B1/2010-2019)
00.4018.783.004	AIR CAN UPGRADE KIT - DEBONAIR 165X38 (INCLUDES AIR CAN, VOLUME SPACERS, SEALS & DECALS) - B1 & LATER (MONARCH 2014+/RT32013+)
00.4018.783.005	AIR CAN UPGRADE KIT - DEBONAIR 184X44 (INCLUDES AIR CAN, VOLUME SPACERS, SEALS & DECALS) - B1 & LATER (MONARCH 2014+/RT32013+)
00.4018.783.006	AIR CAN UPGRADE KIT - DEBONAIR 190/200X51 (INCLUDES AIR CAN,VOLUME SPACERS, SEALS & DECALS) - B1 & LATER (MONARCH 2014+/RT3 2013+)
00.4018.783.007	AIR CAN UPGRADE KIT - DEBONAIR 200X57 (INCLUDES AIR CAN, VOLUME SPACERS, SEALS & DECALS) - B1 & LATER (MONARCH 2014+/RT32013+)
00.4018.783.008	AIR CAN UPGRADE KIT - DEBONAIR 216X63 (INCLUDES AIR CAN, VOLUME SPACERS, SEALS & DECALS) - B1 & LATER (MONARCH 2014+/RT32013+)
00.4318.028.000	AIR CAN UPGRADE KIT - MEGNEG 185/210X47.5-55MM (INCLUDES AIR CAN,NEG VOLUME SPACERS, SEALS, GREASE, OIL & DECALS) - DELUXE/SUPER DELUXE SHOCKS
00.4318.028.001	AIR CAN UPGRADE KIT - MEGNEG 205/230X57.5-65MM (INCLUDES AIR CAN,NEG VOLUME SPACERS, SEALS, GREASE, OIL & DECALS) - DELUXE/SUPER DELUXE SHOCKS
00.4318.028.002	AIR CAN UPGRADE KIT - MEGNEG 225/250X67.5-75MM (INCLUDES AIR CAN,NEG VOLUME SPACERS, SEALS, GREASE, OIL & DECALS) - DELUXE/SUPER DELUXE SHOCKS
00.4018.783.000	DAMPER UPGRADE KIT - CHARGER - (INCLUDES COMPLETE RIGHT SIDE INTERNALS) - BOXXER (A1-B1/2010-2019)
00.4020.546.000	DAMPER UPGRADE KIT - CHARGER RACE DAY CROWN (INCLUDES COMPLETE RIGHT SIDE INTERNALS) - 32MM 100MM MAX TRAVEL - REBA A7 80-100MM (2018+)/SID 100 A1 (2017+)
00.4020.546.002	DAMPER UPGRADE KIT - CHARGER RACE DAY CROWN (INCLUDES COMPLETE RIGHT SIDE INTERNALS) - 35MM 120MM MAX TRAVEL - SID (C1+/2021+)
00.4020.546.001	DAMPER UPGRADE KIT - CHARGER RACE DAY REMOTE (INCLUDES COMPLETE RIGHT SIDE INTERNALS, REMOTE SOLD SEPARATELY) - 32MM 100MM MAX TRAVEL - REBA A7 80-100MM (2018+)/SID 100 A1 (2017+)
00.4020.546.003	DAMPER UPGRADE KIT - CHARGER RACE DAY REMOTE (INCLUDES COMPLETE RIGHT SIDE INTERNALS, REMOTE SOLD SEPARATELY) - 35MM 120MM MAX TRAVEL - SID (C1+/2021+)
00.4018.783.009	DAMPER UPGRADE KIT - CHARGER RLC,100 MAX TRAVEL, CROWN ADJUST (INCLUDES COMPLETE RIGHT SIDE INTERNALS) - SID RLC (A1-B1/2017-2019)/SID RL,XX,WC(B1+/ 2017+)/REBA RL(A7+/2018+)
00.4018.783.010	DAMPER UPGRADE KIT - CHARGER RLC,100 MAX TRAVEL, REMOTE (INCLUDES RIGHT SIDE INTERNALS & ONELOC REMOTE) - SID RLC (A1-B1/2017-2019)/SID RL,XX,WC(B1+/ 2017+)/REBA RL(A7+/2018+)
00.4018.783.011	DAMPER UPGRADE KIT - CHARGER RLC,120 MAX TRAVEL, REMOTE (INCLUDES RIGHT SIDE INTERNALS & ONELOC REMOTE) - SID27/29(A2-A4/2012-2016),SID120(B1-B4/2020,REBA27/29(A1+/2012+)/BLUTOA1+
00.4018.783.020	DAMPER UPGRADE KIT - CHARGER2 RCT REMOTE (INCLUDES COMPLETE RIGHT SIDE INTERNALS & ONELOC REMOTE) - LYRIK/YARI (A1+/2016+)/PIKE 29+(A2-B1/2017-2019)
00.4018.783.016	DAMPER UPGRADE KIT - CHARGER2 RCT REMOTE (INCLUDES COMPLETE RIGHT SIDE INTERNALS & ONELOCREMOTE) - PIKE 27.5"BOOST(A2/2017)/PIKE27.5"/29"(B1+/2018+)/REVELATION(A1+,35MM/2018+)
00.4018.783.013	DAMPER UPGRADE KIT - CHARGER2 RCT REMOTE (INCLUDES COMPLETERIGHT SIDE INTERNALS & ONELOC REMOTE) - PIKE 15X100 27"(A1-A2/2014-2017)
00.4018.783.014	DAMPER UPGRADE KIT - CHARGER2 RCT REMOTE (INCLUDES COMPLETERIGHT SIDE INTERNALS & ONELOC REMOTE) - PIKE 15X100 29"(A1-A2/2014-2017)
00.4018.783.018	DAMPER UPGRADE KIT - CHARGER2 RCT REMOTE (INCLUDES COMPLETERIGHT SIDE INTERNALS & ONELOC REMOTE) - PIKE 29"BOOST 15X110(A1-A2/2014-2017)
00.4018.783.003	DAMPER UPGRADE KIT - CHARGER2 RLC CROWN 120MM MAX TRAVEL (INCLUDES COMPLETE RIGHT SIDE INTERNALS) - SID27/29(A2-A4/2012-2016),SID120(B1-B4/2020,REBA27/29(A1+/2012+)/BLUTOA1+
00.4020.169.005	DAMPER UPGRADE KIT - CHARGER2.1 RC2 CROWN HIGH SPEED, LOW SPEED (INCLUDES RIGHT SIDE INTERNALS) - PIKE 27.5"BOOST(A2/2017)/PIKE27.5"/29"(B1+/2018+)/REVELATION(A1+,35MM/2018+)
00.4020.171.000	DAMPER UPGRADE KIT - CHARGER2.1 RC2 CROWN HIGH SPEED, LOW SPEED COMPRESSION (INCLUDES COMPLETE RIGHT SIDE INTERNALS) - BOXXER 27.5"/29" C1+ (2019+)
00.4020.170.000	DAMPER UPGRADE KIT - CHARGER2.1 RC2 CROWN HIGH SPEED, LOW SPEED COMPRESSION (INCLUDES COMPLETE RIGHT SIDE INTERNALS) - LYRIK/YARI (A1+/2016+)/PIKE 29+(A2-B1/2017-2019)
00.4318.048.000	DAMPER UPGRADE KIT - CHARGER2.1 RC2 CROWN HIGH SPEED, LOW SPEED COMPRESSION (INCLUDES COMPLETE RIGHT SIDE INTERNALS) - ZEB (A1+/2020+)
00.4020.170.001	DAMPER UPGRADE KIT - CHARGER2.1 RCT3 CROWN (INCLUDES COMPLETE RIGHT SIDE INTERNALS) - LYRIK/YARI (A1+/2016+)/PIKE 29+(A2-B1/2017-2019)
00.4020.169.000	DAMPER UPGRADE KIT - CHARGER2.1 RCT3 CROWN (INCLUDES COMPLETE RIGHT SIDE INTERNALS) - PIKE 15X100 26"(A1-A2/2014-2017)
00.4020.169.001	DAMPER UPGRADE KIT - CHARGER2.1 RCT3 CROWN (INCLUDES COMPLETE RIGHT SIDE INTERNALS) - PIKE 15X100 27.5"(A1-A2/2014-2017)
00.4020.169.002	DAMPER UPGRADE KIT - CHARGER2.1 RCT3 CROWN (INCLUDES COMPLETE RIGHT SIDE INTERNALS) - PIKE 15X100 29"(A1-A2/2014-2017)
00.4020.169.003	DAMPER UPGRADE KIT - CHARGER2.1 RCT3 CROWN (INCLUDES COMPLETE RIGHT SIDE INTERNALS) - PIKE 27.5"BOOST(A2/2017)/PIKE27.5"/29"(B1+/2018+)/REVELATION(A1+,35MM/2018+)
00.4020.169.004	DAMPER UPGRADE KIT - CHARGER2.1 RCT3 CROWN (INCLUDES COMPLETE RIGHT SIDE INTERNALS) - PIKE 29"BOOST 15X110 (A1-A2/2014-2017)

TOOLS/LUBRICANTS

TOOLS

00.4315.023.020	AIR PUMP (HIGH PRESSURE/HIGH VOLUME CONVERTIBLE) ROCKSHOX BOXXER
00.4318.012.000	FORK ANCHOR FITTING TOOL FOR RS1 (REVERSE THREADED)
00.4318.030.000	FORK LOWER LEG DUST SEAL INSTALLATION TOOL 30MM (FOR FLANGELESS AND FLANGED DUST SEALS)
00.4318.031.000	FORK LOWER LEG DUST SEAL INSTALLATION TOOL 32MM (FOR FLANGELESS AND FLANGED DUST SEALS)
00.4318.032.000	FORK LOWER LEG DUST SEAL INSTALLATION TOOL 35MM (FOR FLANGELESS AND FLANGED DUST SEALS)
00.4318.012.003	FORK TOP CAP/CASSETTE TOOL (FOR SRAM/SHIMANO CASSETTES) - PIKE, LYRIK, SID, REVELATION, REBA AND PARAGON FORKS
00.4315.024.010	FORK WRENCH 24MM MISSION CONTROL COMP DAMPER ROCKSHOX
00.4315.023.010	HIGH-PRESSURE FORK/SHOCK PUMP (300 PSI MAX) ROCKSHOX
00.4315.023.040	HIGH-PRESSURE FORK/SHOCK PUMP (300 PSI MAX) ROCKSHOX DIGITALGAUGE
00.4315.023.030	HIGH-PRESSURE FORK/SHOCK PUMP (600 PSI MAX) ROCKSHOX
00.4318.012.008	OIL LEVEL ADJUSTER (FOR CHECKING AND ADJUSTING OIL LEVEL) -REVERB/MOTION CONTROL DAMPERS /TURNKEY DAMPERS
00.4315.026.010	REAR SHOCK 1/2"X1/2" BUSHING TOOL (EYELET/SEALHEAD) ROCKSHOX
00.4318.012.002	REAR SHOCK 31MM FLAT WRENCH (CROWFOOT COMPATIBLE) - VIVID AIR RESERVOIR
00.4315.027.010	REAR SHOCK AIR VALVE ADAPTER TOOL - REAR SHOCKS
00.4115.185.000	REAR SHOCK BODY VISE BLOCKS, (FOR SHOCK SERVICE) - KAGE/VIVID
00.4118.013.000	REAR SHOCK BODY VISE BLOCKS, ROCKSHOX MONARCH
11.4309.151.000	REAR SHOCK EYELET BUSHING REMOVAL/INSTALL TOOL 12MM (REMOVESAND INSTALLS EYELET BUSHINGS AND MOUNTING HARDWARE)
00.4318.012.009	REAR SHOCK IFP HEIGHT TOOL (FOR SETTING IFP HEIGHT) - SUPERDELUXE/SUPER DELUXE COIL
00.4318.012.009	REAR SHOCK IFP HEIGHT TOOL (FOR SETTING IFP HEIGHT) - SUPERDELUXE/SUPER DELUXE COIL
00.4318.012.010	REAR SHOCK IFP HEIGHT TOOL (FOR SETTING IFP HEIGHT) -MONARCH/DELUXE
00.4318.041.000	REAR SHOCK IFP HEIGHT TOOL 19MMX70MM (FOR SETTING IFP HEIGHT) - SIDLUXE A1+ (2020+)
00.4318.034.000	REAR SHOCK LOCK PISTON TOOL (USED TO REMOVE LOCKOUT PISTON) - DELUXE RCT/DELUXE NUDE
00.4318.033.000	REAR SHOCK PISTON BOLT SOCKET TOOL (USED TO REMOVE PISTON BOLT) - DELUXE NUDE
00.4315.022.010	REAR SHOCK SCHRADER VALVE REMOVAL TOOL ROCKSHOX
00.4315.028.010	REAR SHOCK SPANNER WRENCH/AIR VALVE TOOL - ROCKSHOX VIVID/VIVID AIR/SUPER DELUXE COIL
00.4118.045.001	REAR SHOCK SPRING COMPRESSOR TOOL, COUNTER MEASURE - ROCKSHOX VIVID/VIVID AIR
00.4115.154.020	REAR SHOCK VISE BLOCKS, 3 HOLE FOR ROCKSHOX MONARCH/VIVID/VIVID AIR/REVERB
00.4315.029.010	REAR SHOCK WRENCH, AIR CAN - ROCKSHOX VIVID AIR
00.4318.007.001	ROCKSHOX STANDARD BLEED KIT (INCLUDES 2 SYRINGES/FITTINGS, REVERB HYDRAULIC FLUID, 120ML BOTTLE NEW)
00.6815.066.020	SEATPOST BLEED TOOL - REVERB
00.6815.066.030	SEATPOST BARB CONNECTOR - REVERB STEALTH
00.6815.066.040	SEATPOST IFP HEIGHT TOOL - REVERB
00.6818.043.000	SEATPOST IFP HEIGHT TOOL (210MM LENGTH) - REVERB AXS/REVERB A1-B1/REVERB STEALTH A2-C1
00.6815.066.010	SEATPOST OIL HEIGHT TOOL - REVERB
00.4318.012.005	SEATPOST TOOL BLEED EDGE (WORKS WITH ROCKSHOX BLEED KITS) - REVERB 1X REMOTE
00.6818.044.000	SEATPOST VENT VALVE TOOL - REVERB AXS/REVERB C1

LUBRICANTS

00.4318.008.002	GREASE ROCKSHOX DYNAMIC SEAL GREASE (PTFE) 1OZ - RECOMMENDED FOR SERVICING REAR SHOCKS & FORKS
00.4318.008.004	GREASE ROCKSHOX DYNAMIC SEAL GREASE 500ML - RECOMMENDED FOR SERVICING REAR SHOCKS & FORKS
00.4315.014.010	GREASE, PM600 MILITARY GREASE 14OZ (FOR ORING SEALS)
11.4115.094.010	LUBRICANT, REAR SHOCK AIR CAN, MAXIMA 15W 50, 1 LITER BOTTLE
11.4115.094.020	LUBRICANT, REAR SHOCK SEALS, PARKER O-LUBE, 2G TUBE
11.4115.094.050	MAXIMA SEAT POST FLUID SERENE, 16 OZ BOTTLE - REVERB (FOR USE IN SERVICING REVERB SEAT POST ONLY, NOT FOR USE IN REMOTE)
11.4115.094.030	MAXIMA SUSPENSION OIL PLUSH, 3WT 1 LITER BOTTLE - REAR SHOCK/CHARGER DAMPER
11.4115.094.040	MAXIMA SUSPENSION OIL PLUSH, 7WT 1 LITER BOTTLE - REAR SHOCK
11.4015.354.040	ROCKSHOX REVERB HYDRAULIC FLUID, 1 LITER BOTTLE - REVERB/SPRINT REMOTE
11.4315.021.070	ROCKSHOX REVERB HYDRAULIC FLUID, 120ML BOTTLE - REVERB/SPRINT REMOTE
11.4015.354.050	ROCKSHOX SUSPENSION OIL, 0-W30, 1 LITER BOTTLE - PIKE/REVELATION 2018+/LYRIK B1/YARI/SID 2020+ LOWER LEGS
11.4315.021.080	ROCKSHOX SUSPENSION OIL, 0W-30, 120ML BOTTLE - PIKE/REVELATION 2018+/LYRIK B1/YARI/SID 2020+ LOWER LEGS
11.4015.354.020	ROCKSHOX SUSPENSION OIL, 10WT, 1 LITER BOTTLE
11.4315.021.030	ROCKSHOX SUSPENSION OIL, 10WT, 120ML BOTTLE
11.4015.354.030	ROCKSHOX SUSPENSION OIL, 15WT, 1 LITER BOTTLE - LOWER LEGS
11.4315.021.040	ROCKSHOX SUSPENSION OIL, 15WT, 120ML BOTTLE - LOWER LEGS
11.4015.354.000	ROCKSHOX SUSPENSION OIL, 2.5WT, 1 LITER BOTTLE
11.4315.021.010	ROCKSHOX SUSPENSION OIL, 2.5WT, 120ML BOTTLE
11.4015.354.010	ROCKSHOX SUSPENSION OIL, 5WT, 1 LITER BOTTLE - FORK DAMPER
11.4315.021.020	ROCKSHOX SUSPENSION OIL, 5WT, 120ML BOTTLE - FORK DAMPER

PARAGON (2016+)

	11.4018.034.000	FORK SPRING TRAVEL SPACERS - SOLO AIR (USED TO CHANGE TRAVEL) - RECON/RECON BOOST, 30 GOLD/SILVER, XC 32/30, PARAGON, SEKTOR SILVER, 35G/JUDY G
	11.4015.450.000	FORK SPRING TRAVEL SPACERS - ALL TRAVEL SPACER KIT (NOT COMPATIBLE WITH SID/REBA/REVELATION SOLO AIR SPRING)

BLUTO (2016-2018)

0 tokens	11.4018.026.017	FORK SPRING SOLO AIR SHAFT - 120MM-26 - BLUTO A1-A2 (2015-2019)
1 token	11.4018.026.016	FORK SPRING SOLO AIR SHAFT - 110MM-26 - BLUTO A1-A2 (2015-2019)
2 tokens	11.4018.026.015	FORK SPRING SOLO AIR SHAFT - 100MM-26 - BLUTO A1-A2 (2015-2019)
	NOTE:	
	11.4018.032.002	FORK SPRING AIR TOP CAP - 32MM SOLO AIR/DEBONAIR (INCLUDES 5 TOKENS, INTERNALLY THREADED AIR CAP) REBA/SID/REVELATION/RS-1/BLUTO/ARGYLE RCT
	11.4018.032.003	FORK SPRING BOTTOMLESS TOKENS - SOLO AIR/DEBONAIR (QTY 5) - SID/REBA/REVELATION/RS-1/BLUTO/ARGYLE RCT SOLO AIR/35G

SID B1-B2 (2018+) REBA A7-A8, 80-100MM CSU

0 tokens	11.4018.026.021	FORK SPRING SOLO AIR SHAFT - 100MM-29 - SID RLC A1+, SID XX, RL B1+(2017+)/REBA A7+ 80-100MM (2018+)
1 token	11.4018.026.022	FORK SPRING SOLO AIR SHAFT - 100MM-27.5 - SID RLC A1+, SID XX, RL B1+(2017+)/REBA A7+ 80-100MM (2018+)
2 tokens	11.4018.026.023	FORK SPRING SOLO AIR SHAFT - 80MM-29 - SID RLC A1+, SID XX, RL B1+(2017+)/REBA A7+ 80-100MM (2018+)
	11.4018.032.002	FORK SPRING AIR TOP CAP - 32MM SOLO AIR/DEBONAIR (INCLUDES 5 TOKENS, INTERNALLY THREADED AIR CAP) REBA/SID/REVELATION/RS-1/BLUTO/ARGYLE RCT
	11.4018.032.003	FORK SPRING BOTTOMLESS TOKENS - SOLO AIR/DEBONAIR (QTY 5) - SID/REBA/REVELATION/RS-1/BLUTO/ARGYLE RCT SOLO AIR/35G
	NOTE:	

SID B (2013-2016) REBA A1-A6 (2013-2017), 80-120MM CSU

0 tokens	11.4018.021.000	FORK SPRING SOLO AIR SHAFT - 120MM-27.5"/(29"A3+) NOT COMPATIBLE WITH PRE 2014/A3 29" (INCLUDES AIR SHAFT, PISTON & SEAL) - SIDB A2-A4(2013-2016)/REBA A3-A7(2013-2017)
1 token	11.4018.021.001	FORK SPRING SOLO AIR SHAFT - 110MM-27.5"/29" (INCLUDES AIR SHAFT, PISTON & SEAL) - SIDB A2-A4(2013-2016)/REBA A3-A7(2013-2017)
2 tokens	11.4018.021.002	FORK SPRING SOLO AIR SHAFT - 100MM-27.5"/29" (INCLUDES AIR SHAFT, PISTON & SEAL) - SIDB A2-A4(2013-2016)/REBA A3-A7(2013-2017)
3 tokens	11.4018.021.003	FORK SPRING SOLO AIR SHAFT - 90MM-27.5"/29" (INCLUDES AIR SHAFT, PISTON & SEAL) - SIDB A2-A4(2013-2016)/REBA A3-A7(2013-2017)
4 tokens	11.4018.021.004	FORK SPRING SOLO AIR SHAFT - 80MM-27.5"/29" (INCLUDES AIR SHAFT, PISTON & SEAL) - SIDB A2-A4(2013-2016)/REBA A3-A7(2013-2017)
0 tokens	11.4018.021.005	FORK SPRING SOLO AIR SHAFT - 120MM-26"/RS-1 (INCLUDES AIR SHAFT, PISTON & SEAL) - SIDB A2-A4(26")/REBA A3-A7(26")/RS-1
1 token	11.4018.021.006	FORK SPRING SOLO AIR SHAFT - 110MM-26"/RS-1 (INCLUDES AIR SHAFT, PISTON & SEAL) - SIDB A2-A4(26")/REBA A3-A7(26")/RS-1
2 tokens	11.4018.021.007	FORK SPRING SOLO AIR SHAFT - 100MM-26"/RS-1 (INCLUDES AIR SHAFT, PISTON & SEAL) - SIDB A2-A4(26")/REBA A3-A7(26")/RS-1
4 tokens	11.4018.021.009	FORK SPRING SOLO AIR SHAFT - 80MM-26"/RS-1 (INCLUDES AIR SHAFT, PISTON & SEAL) - SIDB A2-A4(26")/REBA A3-A7(26")/RS-1
	NOTE:	
	11.4018.032.002	FORK SPRING AIR TOP CAP - 32MM SOLO AIR/DEBONAIR (INCLUDES 5 TOKENS, INTERNALLY THREADED AIR CAP) REBA/SID/REVELATION/RS-1/BLUTO/ARGYLE RCT
	11.4018.032.003	FORK SPRING BOTTOMLESS TOKENS - SOLO AIR/DEBONAIR (QTY 5) - SID/REBA/REVELATION/RS-1/BLUTO/ARGYLE RCT SOLO AIR/35G

REBA A7-A8, 130-150MM (2018+)

0 tokens	11.4018.026.025	FORK SPRING SOLO AIR SHAFT - 150MM-27 (32MM) - REVELATION (A1-A4/2010-2017)/ REBA A7+ 130-150MM(2018+)
1 token	11.4018.026.026	FORK SPRING SOLO AIR SHAFT - 140MM-29/27 (32MM) - REVELATION (A1-A4/2010-2017)/ REBA A7+ 130-150MM(2018+)
2 tokens	11.4018.026.027	FORK SPRING SOLO AIR SHAFT - 130MM-29/27 (32MM) - REVELATION (A1-A4/2010-2017)/ REBA A7+ 130-150MM(2018+)
3 tokens	11.4018.026.029	FORK SPRING SOLO AIR SHAFT - 120MM-29/27 (32MM) - REBA A7+ 130-150MM(2018+)
	11.4018.032.002	FORK SPRING AIR TOP CAP - 32MM SOLO AIR/DEBONAIR (INCLUDES 5 TOKENS, INTERNALLY THREADED AIR CAP) REBA/SID/REVELATION/RS-1/BLUTO/ARGYLE RCT
	11.4018.032.003	FORK SPRING BOTTOMLESS TOKENS - SOLO AIR/DEBONAIR (QTY 5) - SID/REBA/REVELATION/RS-1/BLUTO/ARGYLE RCT SOLO AIR/35G
	NOTE:	
	NOTE:	

RS-1 (2016-2019)

0 tokens	11.4018.021.000	FORK SPRING SOLO AIR SHAFT - 120MM-27.5"/(29"A3+) NOT COMPATIBLE WITH PRE 2014/A3 29" (INCLUDES AIR SHAFT, PISTON & SEAL) - SIDB A2-A4(2013-2016)/REBA A3-A7(2013-2017)
1 token	11.4018.021.001	FORK SPRING SOLO AIR SHAFT - 110MM-27.5"/29" (INCLUDES AIR SHAFT, PISTON & SEAL) - SIDB A2-A4(2013-2016)/REBA A3-A7(2013-2017)
2 tokens	11.4018.021.002	FORK SPRING SOLO AIR SHAFT - 100MM-27.5"/29" (INCLUDES AIR SHAFT, PISTON & SEAL) - SIDB A2-A4(2013-2016)/REBA A3-A7(2013-2017)
3 tokens	11.4018.021.003	FORK SPRING SOLO AIR SHAFT - 90MM-27.5"/29" (INCLUDES AIR SHAFT, PISTON & SEAL) - SIDB A2-A4(2013-2016)/REBA A3-A7(2013-2017)
4 tokens	11.4018.021.004	FORK SPRING SOLO AIR SHAFT - 80MM-27.5"/29" (INCLUDES AIR SHAFT, PISTON & SEAL) - SIDB A2-A4(2013-2016)/REBA A3-A7(2013-2017)
0 tokens	11.4018.021.005	FORK SPRING SOLO AIR SHAFT - 120MM-26"/RS-1 (INCLUDES AIR SHAFT, PISTON & SEAL) - SIDB A2-A4(26")/REBA A3-A7(26")/RS-1
1 token	11.4018.021.006	FORK SPRING SOLO AIR SHAFT - 110MM-26"/RS-1 (INCLUDES AIR SHAFT, PISTON & SEAL) - SIDB A2-A4(26")/REBA A3-A7(26")/RS-1
2 tokens	11.4018.021.007	FORK SPRING SOLO AIR SHAFT - 100MM-26"/RS-1 (INCLUDES AIR SHAFT, PISTON & SEAL) - SIDB A2-A4(26")/REBA A3-A7(26")/RS-1
4 tokens	11.4018.021.009	FORK SPRING SOLO AIR SHAFT - 80MM-26"/RS-1 (INCLUDES AIR SHAFT, PISTON & SEAL) - SIDB A2-A4(26")/REBA A3-A7(26")/RS-1
	NOTE:	
	11.4018.032.002	FORK SPRING AIR TOP CAP - 32MM SOLO AIR/DEBONAIR (INCLUDES 5 TOKENS, INTERNALLY THREADED AIR CAP) REBA/SID/REVELATION/RS-1/BLUTO/ARGYLE RCT
	11.4018.032.003	FORK SPRING BOTTOMLESS TOKENS - SOLO AIR/DEBONAIR (QTY 5) - SID/REBA/REVELATION/RS-1/BLUTO/ARGYLE RCT SOLO AIR/35G

TRAVEL CHANGE GUIDE

REVELATION (35MM) (2018+)

0 tokens	00.4020.552.000	Air Spring Upgrade Kit - DebonAir C1 160mm (Includes DebonAir C1Assembly, seal head) - PIKE B1+/Revelation A1+ (2018+)
1 token	00.4020.552.001	Air Spring Upgrade Kit - DebonAir C1 150mm (Includes DebonAir C1Assembly, seal head) - PIKE B1+/Revelation A1+ (2018+)
2 tokens	00.4020.552.002	Air Spring Upgrade Kit - DebonAir C1 140mm (Includes DebonAir C1Assembly, seal head) - PIKE B1+/Revelation A1+ (2018+)
3 tokens	00.4020.552.003	Air Spring Upgrade Kit - DebonAir C1 130mm (Includes DebonAir C1Assembly, seal head) - PIKE B1+/Revelation A1+ (2018+)
4 tokens	00.4020.552.004	Air Spring Upgrade Kit - DebonAir C1 120mm (Includes DebonAir C1Assembly, seal head) - PIKE B1+/Revelation A1+ (2018+)
	NOTE: FOR EACH 10MM OF TRAVEL YOU REDUCE YOUR FORK, YOU MUST ADD ONE BOTTOMLESS TOKEN	
	11.4018.032.000	FORK SPRING BOTTOMLESS TOKENS - 35MM/38MM SOLO AIR/DEBONAIR (QTY 3) - PIKE/BOXXER B1/LYRIK B1/YARI/SID 35MM/ZEB
	11.4018.032.001	FORK SPRING BOTTOMLESS TOKENS - 35MM/38MM SOLO AIR/DEBONAIR (QTY 10) PIKE/BOXXER B1/LYRIK B1/YARI/SID 35MM/ZEB

REVELATION (2013-2017)

0 tokens	11.4018.022.000	FORK SPRING SOLO AIR SHAFT - 150MM-26"/27.5"/29" (INCLUDES AIR SHAFT, PISTON & SEAL) - REVELATION 32MM-A1-A4 (2010-2017)
1 token	11.4018.022.001	FORK SPRING SOLO AIR SHAFT - 140MM-26"/27.5"/29" (INCLUDES AIR SHAFT, PISTON & SEAL) - REVELATION 32MM-A1-A4 (2010-2017)
2 tokens	11.4018.022.002	FORK SPRING SOLO AIR SHAFT - 130MM-26"/27.5"/29" (INCLUDES AIR SHAFT, PISTON & SEAL) - REVELATION 32MM-A1-A4 (2010-2017)
3 tokens	11.4018.022.003	FORK SPRING SOLO AIR SHAFT - 120MM-26"/27.5"/29" (INCLUDES AIR SHAFT, PISTON & SEAL) - REVELATION 32MM-A1-A4 (2010-2017)
5 tokens	11.4018.022.005	FORK SPRING SOLO AIR SHAFT - 100MM-26"/27.5"/29" (INCLUDES AIR SHAFT, PISTON & SEAL) - REVELATION 32MM-A1-A4 (2010-2017)
	11.4018.032.002	FORK SPRING AIR TOP CAP - 32MM SOLO AIR/DEBONAIR (INCLUDES 5 TOKENS, INTERNALLY THREADED AIR CAP) REBA/SID/REVELATION/RS-1/BLUTO/ARGYLE RCT
	11.4018.032.003	FORK SPRING BOTTOMLESS TOKENS - SOLO AIR/DEBONAIR (QTY 5) - SID/REBA/REVELATION/RS-1/BLUTO/ARGYLE RCT SOLO AIR/35G

PIKE (2018+)

0 tokens	00.4020.552.000	Air Spring Upgrade Kit - DebonAir C1 160mm (Includes DebonAir C1Assembly, seal head) - PIKE B1+/Revelation A1+ (2018+)
1 token	00.4020.552.001	Air Spring Upgrade Kit - DebonAir C1 150mm (Includes DebonAir C1Assembly, seal head) - PIKE B1+/Revelation A1+ (2018+)
2 tokens	00.4020.552.002	Air Spring Upgrade Kit - DebonAir C1 140mm (Includes DebonAir C1Assembly, seal head) - PIKE B1+/Revelation A1+ (2018+)
3 tokens	00.4020.552.003	Air Spring Upgrade Kit - DebonAir C1 130mm (Includes DebonAir C1Assembly, seal head) - PIKE B1+/Revelation A1+ (2018+)
4 tokens	00.4020.552.004	Air Spring Upgrade Kit - DebonAir C1 120mm (Includes DebonAir C1Assembly, seal head) - PIKE B1+/Revelation A1+ (2018+)
	NOTE: FOR EACH 10MM OF TRAVEL YOU REDUCE YOUR FORK, YOU MUST ADD ONE BOTTOMLESS TOKEN	
	11.4018.032.000	FORK SPRING BOTTOMLESS TOKENS - 35MM/38MM SOLO AIR/DEBONAIR (QTY 3) - PIKE/BOXXER B1/LYRIK B1/YARI/SID 35MM/ZEB
	11.4018.032.001	FORK SPRING BOTTOMLESS TOKENS - 35MM/38MM SOLO AIR/DEBONAIR (QTY 10) PIKE/BOXXER B1/LYRIK B1/YARI/SID 35MM/ZEB

PIKE (2014-2017)

*	00.4020.552.005	Air Spring Upgrade Kit - DebonAir C1 (Includes DebonAir C1 Assembly, seal head) - PIKE (A1-A2/2014-2017) 160mm-29"
*	00.4020.552.006	Air Spring Upgrade Kit - DebonAir C1 (Includes DebonAir C1 Assembly, seal head) - PIKE (A1-A2/2014-2017) 150mm-29"
*	00.4020.552.007	Air Spring Upgrade Kit - DebonAir C1 (Includes DebonAir C1 Assembly, seal head) - PIKE (A1-A2/2014-2017) 140mm-29", 160mm-27.5"
*	00.4020.552.008	Air Spring Upgrade Kit - DebonAir C1 (Includes DebonAir C1 Assembly, seal head) - PIKE (A1-A2/2014-2017) 130mm-29", 150mm-27.5", 160mm-26"
*	00.4020.552.009	Air Spring Upgrade Kit - DebonAir C1 (Includes DebonAir C1 Assembly, seal head) - PIKE (A1-A2/2014-2017) 120mm-29", 140mm-27.5" 150mm-26"
*	00.4020.552.010	Air Spring Upgrade Kit - DebonAir C1 (Includes DebonAir C1 Assembly, seal head) - PIKE (A1-A2/2014-2017) 130mm-27.5", 140mm-26"
*	00.4020.552.011	Air Spring Upgrade Kit - DebonAir C1 (Includes DebonAir C1 Assembly, seal head) - PIKE (A1-A2/2014-2017) 120mm-27.5", 130mm-26"
*	00.4020.552.012	Air Spring Upgrade Kit - DebonAir C1 (Includes DebonAir C1 Assembly, seal head) - PIKE (A1-A2/2014-2017) 120mm-26"
	NOTE: FOR EACH 10MM OF TRAVEL YOU REDUCE YOUR FORK, YOU MUST ADD ONE BOTTOMLESS TOKEN	
	11.4018.032.000	FORK SPRING BOTTOMLESS TOKENS - 35MM/38MM SOLO AIR/DEBONAIR (QTY 3) - PIKE/BOXXER B1/LYRIK B1/YARI/SID 35MM/ZEB
	11.4018.032.001	FORK SPRING BOTTOMLESS TOKENS - 35MM/38MM SOLO AIR/DEBONAIR (QTY 10) PIKE/BOXXER B1/LYRIK B1/YARI/SID 35MM/ZEB

YARI (2017-2020)

0 tokens	00.4020.572.000	Air Spring Upgrade Kit - DebonAir C1 180mm (Includes DebonAirAssembly, seal head) - LYRIK/YARI A1+ (2016+)
1 token	00.4020.572.001	Air Spring Upgrade Kit - DebonAir C1 170mm (Includes DebonAirAssembly, seal head) - LYRIK/YARI A1+ (2016+)
2 tokens	00.4020.572.002	Air Spring Upgrade Kit - DebonAir C1 160mm (Includes DebonAirAssembly, seal head) - LYRIK/YARI A1+ (2016+)
2 tokens	00.4020.572.003	Air Spring Upgrade Kit - DebonAir C1 150mm (Includes DebonAirAssembly, seal head) - LYRIK/YARI A1+ (2016+)
3 tokens	00.4020.572.004	Air Spring Upgrade Kit - DebonAir C1 140mm (Includes DebonAirAssembly, seal head) - YARI A1+ (2016+)
3 tokens	00.4020.572.005	Air Spring Upgrade Kit - DebonAir C1 130mm (Includes DebonAirAssembly, seal head) - YARI A1+ (2016+)
4 tokens	00.4020.572.006	Air Spring Upgrade Kit - DebonAir C1 120mm (Includes DebonAirAssembly, seal head) - YARI A1+ (2016+)
	NOTE: FOR EACH 10MM OF TRAVEL YOU REDUCE YOUR FORK, YOU MUST ADD ONE BOTTOMLESS TOKEN	
	11.4018.032.000	FORK SPRING BOTTOMLESS TOKENS - 35MM/38MM SOLO AIR/DEBONAIR (QTY 3) - PIKE/BOXXER B1/LYRIK B1/YARI/SID 35MM/ZEB
	11.4018.032.001	FORK SPRING BOTTOMLESS TOKENS - 35MM/38MM SOLO AIR/DEBONAIR (QTY 10) PIKE/BOXXER B1/LYRIK B1/YARI/SID 35MM/ZEB

LYRIK (2016-2020)

0 tokens	00.4020.572.000	Air Spring Upgrade Kit - DebonAir C1 180mm (Includes DebonAirAssembly, seal head) - LYRIK/YARI A1+ (2016+)
1 token	00.4020.572.001	Air Spring Upgrade Kit - DebonAir C1 170mm (Includes DebonAirAssembly, seal head) - LYRIK/YARI A1+ (2016+)
2 tokens	00.4020.572.002	Air Spring Upgrade Kit - DebonAir C1 160mm (Includes DebonAirAssembly, seal head) - LYRIK/YARI A1+ (2016+)
2 tokens	00.4020.572.003	Air Spring Upgrade Kit - DebonAir C1 150mm (Includes DebonAirAssembly, seal head) - LYRIK/YARI A1+ (2016+)
	NOTE: FOR EACH 10MM OF TRAVEL YOU REDUCE YOUR FORK, YOU MUST ADD ONE BOTTOMLESS TOKEN	
	11.4018.032.000	FORK SPRING BOTTOMLESS TOKENS - 35MM/38MM SOLO AIR/DEBONAIR (QTY 3) - PIKE/BOXXER B1/LYRIK B1/YARI/SID 35MM/ZEB
	11.4018.032.001	FORK SPRING BOTTOMLESS TOKENS - 35MM/38MM SOLO AIR/DEBONAIR (QTY 10) PIKE/BOXXER B1/LYRIK B1/YARI/SID 35MM/ZEB

ZEB (2021)

0 tokens	00.4020.574.001	Air Spring Upgrade Kit - DebonAir C1 190mm (Includes Debon Air Assembly, seal head) - ZEB (A1+/2021+)
0 tokens	00.4020.574.002	Air Spring Upgrade Kit - DebonAir C1 180mm (Includes Debon Air Assembly, seal head) - ZEB (A1+/2021+)
1 token	00.4020.574.003	Air Spring Upgrade Kit - DebonAir C1 170mm (Includes Debon Air Assembly, seal head) - ZEB (A1+/2021+)
2 tokens	00.4020.574.004	Air Spring Upgrade Kit - DebonAir C1 160mm (Includes Debon Air Assembly, seal head) - ZEB (A1+/2021+)
2 tokens	00.4020.574.005	Air Spring Upgrade Kit - DebonAir C1 150mm (Includes Debon Air Assembly, seal head) - ZEB (A1+/2021+)

ARGYLE(2007-2017)

	11.4015.450.000	FORK SPRING TRAVEL SPACERS - ALL TRAVEL SPACER KIT (NOT COMPATIBLE WITH SID/REBA/REVELATION SOLO AIR SPRING)

TRAVEL CHANGE GUIDE

PIKE (2014-2017) DPA

0 tokens	11.4018.026.007	FORK SPRING DUAL POSITION AIR SHAFT - 160MM-29, 180MM-29+, 180MM-LYRIK/YARI -PIKE A1-A2 (2014-2017)/YARI A1+/LYRIK B1+
1 token	11.4018.026.009	FORK SPRING DUAL POSITION AIR SHAFT - 150MM-29, 170MM-29+, 170MM- PIKE A1-A2 (2014-2017)/YARI A1+/LYRIK B1+
0 tokens	11.4018.026.006	FORK SPRING DUAL POSITION AIR SHAFT - 160MM-27.5, 160MM-29+, 160MM- PIKE A1-A2 (2014-2017)/YARI A1+/LYRIK B1+
1 token	11.4018.026.005	FORK SPRING DUAL POSITION AIR SHAFT - 160MM-26, 150MM-27.5, 150MM-29+, 150MM - PIKE A1-A2 (2014-2017)/YARI A1+/LYRIK B1+
1 token	11.4018.026.008	FORK SPRING DUAL POSITION AIR SHAFT - 150MM-26 - PIKE A1-A2 (2014-2017)

NOTE: FOR EACH 10MM OF TRAVEL YOU REDUCE YOUR FORK, YOU MUST ADD ONE BOTTOMLESS TOKEN

11.4018.032.004	FORK SPRING BOTTOMLESS TOKENS - 35MM/38MM DUAL POSITION AIR (QTY 3) - PIKE A1-A2/LYRIK B1+/YARI A1+/ZEB
11.4018.032.005	FORK SPRING BOTTOMLESS TOKENS - 35MM/38MM DUAL POSITION AIR (QTY 10) - PIKE A1-A2/LYRIK B1+/YARI A1+/ZEB

YARI (2016-2017) DPA

0 tokens	11.4018.026.007	FORK SPRING DUAL POSITION AIR SHAFT - 160MM-29, 180MM-29+, 180MM-LYRIK/YARI -PIKE A1-A2 (2014-2017)/YARI A1+/LYRIK B1+
0 tokens	11.4018.026.009	FORK SPRING DUAL POSITION AIR SHAFT - 150MM-29, 170MM-29+, 170MM- PIKE A1-A2 (2014-2017)/YARI A1+/LYRIK B1+
1 token	11.4018.026.006	FORK SPRING DUAL POSITION AIR SHAFT - 160MM-27.5, 160MM-29+, 160MM- PIKE A1-A2 (2014-2017)/YARI A1+/LYRIK B1+
1 token	11.4018.026.005	FORK SPRING DUAL POSITION AIR SHAFT - 160MM-26, 150MM-27.5, 150MM-29+, 150MM - PIKE A1-A2 (2014-2017)/YARI A1+/LYRIK B1+

NOTE: FOR EACH 10MM OF TRAVEL YOU REDUCE YOUR FORK, YOU MUST ADD ONE BOTTOMLESS TOKEN

11.4018.032.004	FORK SPRING BOTTOMLESS TOKENS - 35MM/38MM DUAL POSITION AIR (QTY 3) - PIKE A1-A2/LYRIK B1+/YARI A1+/ZEB
11.4018.032.005	FORK SPRING BOTTOMLESS TOKENS - 35MM/38MM DUAL POSITION AIR (QTY 10) - PIKE A1-A2/LYRIK B1+/YARI A1+/ZEB

LYRIK (2016-2017) DPA

0 tokens	11.4018.026.007	FORK SPRING DUAL POSITION AIR SHAFT - 160MM-29, 180MM-29+, 180MM-LYRIK/YARI -PIKE A1-A2 (2014-2017)/YARI A1+/LYRIK B1+
0 tokens	11.4018.026.009	FORK SPRING DUAL POSITION AIR SHAFT - 150MM-29, 170MM-29+, 170MM- PIKE A1-A2 (2014-2017)/YARI A1+/LYRIK B1+
1 token	11.4018.026.006	FORK SPRING DUAL POSITION AIR SHAFT - 160MM-27.5, 160MM-29+, 160MM- PIKE A1-A2 (2014-2017)/YARI A1+/LYRIK B1+
1 token	11.4018.026.005	FORK SPRING DUAL POSITION AIR SHAFT - 160MM-26, 150MM-27.5, 150MM-29+, 150MM - PIKE A1-A2 (2014-2017)/YARI A1+/LYRIK B1+

NOTE: FOR EACH 10MM OF TRAVEL YOU REDUCE YOUR FORK, YOU MUST ADD ONE BOTTOMLESS TOKEN

11.4018.032.004	FORK SPRING BOTTOMLESS TOKENS - 35MM/38MM DUAL POSITION AIR (QTY 3) - PIKE A1-A2/LYRIK B1+/YARI A1+/ZEB
11.4018.032.005	FORK SPRING BOTTOMLESS TOKENS - 35MM/38MM DUAL POSITION AIR (QTY 10) - PIKE A1-A2/LYRIK B1+/YARI A1+/ZEB

ZEB (2021)

1 token	11.4018.103.010	FORK SPRING DUAL POSITION AIR ASSEMBLY - 160mm-27.5/29 (INCLUDES TOP CAP, KNOB, AIR PISTON, SHAFT BOLT) - ZEB A1 (2021)
0 tokens	11.4018.103.011	FORK SPRING DUAL POSITION AIR ASSEMBLY - 170mm-27.5/29 (INCLUDES TOP CAP, KNOB, AIR PISTON, SHAFT BOLT) - ZEB A1 (2021)
0 tokens	11.4018.103.012	FORK SPRING DUAL POSITION AIR ASSEMBLY - 180mm-27.5/29 (INCLUDES TOP CAP, KNOB, AIR PISTON, SHAFT BOLT) - ZEB A1 (2021)

DUAL AIR FORKS - TRAVEL CHANGE

REBA (2009-2012)SID A (2008-2012) , SID A CARBON 1- 1/8" Steer (2008- 2014)SID B (2011-2012)REVELATION (2010-2012)

11.4015.450.000	FORK SPRING TRAVEL SPACERS - ALL TRAVEL SPACER KIT (NOT COMPATIBLE WITH SID/REBA/REVELATION SOLO AIR SPRING)

COIL SPRING FORKS - TRAVEL CHANGE Cont.

XC30

11.4015.538.010	FORK SPRING COIL - X-SOFT (SILVER) 100MM-26 (INCLUDES TOP CAP & ADJUSTER KNOB) - XC30 A1-A3/30 SILVER A1-A2
11.4015.538.020	FORK SPRING COIL - SOFT (YELLOW) 100MM-26 (INCLUDES TOP CAP & ADJUSTER KNOB) - XC30 A1-A3/30 SILVER A1-A2-A2
11.4015.538.040	FORK SPRING COIL - FIRM (BLUE) 100MM-26 (INCLUDES TOP CAP & ADJUSTER KNOB) - XC30 A1-A3/30 SILVER A1-A2
11.4015.538.050	FORK SPRING COIL - X-FIRM (BLACK) 100MM-26 (INCLUDES TOP CAP & ADJUSTER KNOB) - XC30 A1-A3/30 SILVER A1-A2
11.4018.010.092	FORK SPRING COIL - X-SOFT (SILVER) 100MM-XC30 27.5 A1-A3/30SILVER 27.5/29 A1
11.4018.010.096	FORK SPRING COIL - X-FIRM (BLACK) 100MM-27 100MM - XC30 27.5 A1-A3/30 SILVER 27.5/29 A1
11.4018.010.026	FORK SPRING COIL - X-SOFT (SILVER) 100MM-29 - XC30
11.4018.010.030	FORK SPRING COIL - X-FIRM (BLACK) XC30 100MM-29 - XC30

XC32 (2011-2017)

11.4015.481.020	FORK SPRING COIL - X-SOFT (SILVER) 100MM (INCLUDES SPRING, SHAFT, SHAFT BOLT) -TORA TK (2011)/RECON SILVER B1/XC32 A1+/XC32 A1+
11.4015.481.010	FORK SPRING COIL - X-SOFT (SILVER) 120MM (INCLUDES SPRING, SHAFT, SHAFT BOLT) -TORA TK (2011)/RECON SILVER B1/XC32 A1+/XC32 A1+
11.4015.481.140	FORK SPRING COIL - X-FIRM (BLACK) 100MM (INCLUDES SPRING, SHAFT, SHAFT BOLT) -TORA TK (2011)/RECON SILVER B1/XC32 A1+/XC32 A1+
11.4015.481.130	FORK SPRING COIL - X-FIRM (BLACK) 120MM (INCLUDES SPRING, SHAFT, SHAFT BOLT) -TORA TK (2011)/RECON SILVER B1/XC32 A1+/XC32 A1+

DOMAIN (2007-2017)

NOTE: BOTH COIL SPRING SHAFT ASSEMBLIES USE THE SAME COIL SPRINGS, OUTLINED BELOW

11.4015.179.000	FORK SPRING COIL - X-SOFT (SILVER) - DOMAIN SINGLE CROWN A1-A2 (2007- 2016)
11.4015.047.000	FORK SPRING COIL - SOFT (YELLOW) - DOMAIN SINGLE CROWN A1-A2 (2007- 2016)
11.4015.046.000	FORK SPRING COIL - MEDIUM (RED) - DOMAIN SINGLE CROWN A1-A2 (2007- 2016)
11.4015.045.000	FORK SPRING COIL - FIRM (BLUE) - DOMAIN SINGLE CROWN A1-A2 (2007- 2016)
11.4015.048.000	FORK SPRING COIL - X-FIRM (BLACK) - DOMAIN SINGLE CROWN A1-A2 (2007- 2016)

LYRIK (2010-2016)

11.4015.421.010	FORK SPRING COIL SHAFT ASSY - 170MM - LYRIK A1-A2 (2010- 2016)

NOTE: BOTH COIL SPRING SHAFT ASSEMBLIES USE THE SAME COIL SPRINGS, OUTLINED BELOW

11.4015.422.030	FORK SPRING COIL - MEDIUM (RED) 170MM - LYRIK A1-A2 (2010- 2016)
11.4015.422.040	FORK SPRING COIL - FIRM (BLUE) 170MM - LYRIK A1-A2 (2010- 2016)
11.4015.422.050	FORK SPRING COIL - X-FIRM (BLACK) 170MM - LYRIK A1-A2 (2010- 2016)

BOXXER (2010-2017)

11.4015.381.000	FORK SPRING COIL SHAFT - (INCLUDES SHAFT BOLT) - DOMAIN DUAL CROWN A1-A3 (2007- 2017)/BOXXER RACE/RC, TEAM/R2C2 (2010- 2018)

NOTE: 11.4015.381.000 IS FOR 200MM, 11.4018.058.000 IS FOR 180MM TRAVEL. YOU WILL USE THE SAME COIL SPRING FOR BOTH SHAFTS

11.4015.380.000	FORK SPRING COIL - X-SOFT (SILVER) - DOMAIN DUAL CROWN A1-A3 (2007- 2017)/BOXXER RACE/RC, TEAM/R2C2 (2010- 2018)
11.4015.380.010	FORK SPRING COIL - SOFT (YELLOW) - DOMAIN DUAL CROWN A1-A3 (2007- 2017)/BOXXER RACE/RC, TEAM/R2C2 (2010- 2018)
11.4015.380.020	FORK SPRING COIL - MEDIUM (RED) - DOMAIN DUAL CROWN A1-A3 (2007- 2017)/BOXXER RACE/RC, TEAM/R2C2 (2010- 2018)
11.4015.380.030	FORK SPRING COIL - FIRM (BLUE) - DOMAIN DUAL CROWN A1-A3 (2007- 2017)/BOXXER RACE/RC, TEAM/R2C2 (2010- 2018)
11.4015.380.040	FORK SPRING COIL - X-FIRM (BLACK) - DOMAIN DUAL CROWN A1-A3 (2007- 2017)/BOXXER RACE/RC, TEAM/R2C2 (2010- 2018)

FRONT SUSPENSION - DAMPER UPGRADE CHART

100mm Max Travel

Charger Upgrade kits - 32mm Chassis						
Fork		MODEL	YEAR	Max Travel	Upgrade Kit	Description
SID	RL	FS-SID-RL-B1	2017	100mm		
		FS-SID-RL-B2	2018			
		FS-SID-RL-B3	2019			
	RLC	FS-SID-RLC-A1	2017			
		FS-SID-RLC-A2	2018			
		FS-SID-RLC-B1	2019			
	XX	FS-SID-XX-B1	2017			
		FS-SID-XX-B2	2018			
		FS-SID-XX-B3	2019		00.4020.546.000	AM UPGRADE KIT CHARGER RD 32 CRN 100mm
	WORLD CUP	FS-SID-WC-B1	2017		00.4020.546.001	AM UPGRADE KIT CHARGER RD 32 RMT 100mm
		FS-SID-WC-B2	2018		00.4018.783.009	AM UPGRADE KIT CHARGER RLC SID CROWN
		FS-SID-WC-B3	2019		00.4018.783.010	AM UPGRADE KIT CHARGER RLC SID REMOTE
	SELECT	FS-SID-SEL-B4	2020			
		FS-SIDS-SEL-C1	2021			
	SELECT PLUS	FS-SIDS-SELP-C1	2020			
		FS-SID-SELP-B4	2021			
	ULTIMATE	FS-SID-ULT-B4	2020			
		FS-SIDS-ULT-C1	2021			
Reba	RL	FS-RBA-RL-A7	2018			
		FS-RBA-RL-A8	2019-2020			
		FS-RBA-RL-A9	2021			

120mm Max travel

Charger Upgrade kits - 32mm Chassis						
Fork		MODEL	YEAR	Max Travel	Upgrade Kit	Description
SID	RL	FS-SID-RL-A2	2013	120mm		
		FS-SID-RL-A3	2014-2015			
		FS-SID-RL-A4	2016			
		FS-SID-RL-B3	2019			
	RLT	FS-SID-RLT-A2	2013			
		FS-SID-RLT-A3	2014-2015			
		FS-SID-RLT-A4	2016			
	RLC	FS-SID-RLC-B1	2019			
	RCT3	FS-SID-RCT3-A2	2013			
		FS-SID-RCT3-A3	2014-2015			
		FS-SID-RCT3-A4	2016			
	XX	FS-SID-XX-A2	2013			
		FS-SID-XX-A3	2014-2015			
		FS-SID-XX-A4	2016			
	WORLD CUP	FS-SID-WC-A2	2013			
		FS-SID-WC-A3	2014-2015			
		FS-SID-WC-A4	2016			
	XX WORLD CUP	FS-SID-XXWC-A2	2013		00.4018.783.003	AM UPGRADE KIT CHARGER RLC SID/REBA CRN
		FS-SID-XXWC-A3	2014-2015		00.4018.783.011	AM UPGRADE KIT CHARGER RLC SID/REBA RMT
		FS-SID-XXWC-A4	2016		*00.4020.546.000	AM UPGRADE KIT CHARGER RD 32 CRN 100mm
	SELECT	FS-SID-SEL-B4	2020		*00.4020.546.001	AM UPGRADE KIT CHARGER RD 32 RMT 100mm
	SELECT PLUS	FS-SID-SELP-B4	2020			
	ULTIMATE	FS-SID-ULT-B4	2020			
Reba	RL	FS-REBA-RL-A2	2013			
		FS-REBA-RL-A3	2014			
		FS-REBA-RL-A4	2015			
		FS-REBA-RL-A5	2016			
		FS-REBA-RL-A6	2017			
		FS-REBA-RL-A7	2018			
		FS-REBA-RL-A8	2019-2020			
		FS-REBA-RL-A9	2021			
	RLT	FS-REBA-RLT-A2	2013			
		FS-REBA-RLT-A3	2014			
		FS-REBA-RLT-A4	2015			
		FS-REBA-RLT-A5	2016-2017			
Bluto	RL	FS-BLTO-RL-A1	2015			
		FS-BLTO-RL-A2	2016			
		FS-BLTO-RL-A3	2017-2018			
		FS-BLTO-RL-A4	2019-2021			
	RCT3	FS-BLTO-RCT3-A2	2016			
		FS-BLTO-RCT3-A3	2017-2018			

* 100mm max travel

Charger Race Day Upgrade kits - 35mm Chassis

Fork		MODEL	YEAR	Max Travel	Upgrade Kit	Description
SID	SELECT	FS-SID-SEL-C1	2021	120mm	00.4020.546.002	AM UPGRADE KIT CHARGER RD 35 CRN 120
	SELECT PLUS	FS-SID-SELP-C1	2021		00.4020.546.003	AM UPGRADE KIT CHARGER RD 35 RMT 120
	ULTIMATE	FS-SID-ULT-C1	2021			

Charger 2.1 Upgrade Kits

Fork		MODEL	YEAR	Max Travel	Upgrade Kit	Description
Pike	RC	FS-PIKE-RC-A1	2014-2015	160mm	00.4020.169.000	AM UPGRADE KIT CHARGER2.1RCT3PIKE26 CRN
		FS-PIKE-RC-A2	2016-2017		00.4020.169.001	AM UPGRADE KIT CHARGER2.1RCT3PIKE27 CRN
	RCT3	FS-PIKE-RCT3-A1	2014-2015		00.4020.169.002	AM UPGRADE KIT CHARGER2.1RCT3PIKE29 CRN
					00.4020.169.003	AM UPGRADE KIT CHARGER2.1RCT3PIKE B27CRN
		FS-PIKE-RCT3-A2	2016-2017		00.4020.169.004	AM UPGRADE KIT CHARGER2.1RCT3PIKE B29CRN
	RC	FS-PIKE-RC-B1	2018	160mm	00.4020.169.003 00.4020.169.005	AM UPGRADE KIT CHARGER2.1RCT3PIKE B27CRN AM UPGRADE KIT CHARGER2.1 RC2 PIKE B1
		FS-PIKE-RC-B2	2019			
	RCT3	FS-PIKE-RCT3-B1	2018			
		FS-PIKE-RCT3-B2	2019			
	SELECT	FS-PIKE-SEL-B3	2020			
		FS-PIKE-SEL-B4	2021			
	SELECT PLUS	FS-PIKE-SELP-B3	2020			
		FS-PIKE-SELP-B4	2021			
	ULTIMATE	FS-PIKE-ULT-B3	2020			
		FS-PIKE-ULT-B4	2021			
Revelation	RC	FS-RVL-RC-A1	2018			
		FS-RVL-RC-A2	2019-2020			
		FS-RVL-RC-A3	2021			
	CHARGER	FS-RVL-CHRC-A1	2019			

Charger 2.1 Upgrade Kits

Fork		MODEL	YEAR	Max Travel	Upgrade Kit	Description
Lyrik	RC	FS-LYRK-RC-B1	2016-2017	180mm	00.4020.170.000 00.4020.170.001	AM UPGRADE KIT CHARGER2.1RC2LYRIK CRN AM UPGRADE KIT CHARGER2.1 RCT3 LYRIK CRN
		FS-LYRK-RC-C1	2018			
		FS-LYRK-RC-C2	2019			
	RCT3	FS-LYRK-RCT3-A1	2016-2017			
		FS-LYRK-RCT3-B1	2018			
		FS-LYRK-RCT3-C1	2019			
	RC2	FS-LYRK-RC2-C1	2019			
	SELECT	FS-LYRK-SEL-C2	2020			
		FS-LYRK-SEL-C3	2021			
	SELECT PLUS	FS-LYRK-SELP-C2	2020			
		FS-LYRK-SELP-C3	2021			
	ULTIMATE	FS-LYRK-ULT-C2	2020			
		FS-LYRK-ULT-C3	2021			
Yari	RC	FS-YARI-RC-A1	2016-2017			
		FS-YARI-RC-B1	2018			
		FS-YARI-RC-B2	2019-2020			
		FS-YARI-RC-B3	2021			
	CHARGER	FS-YARI-CHRC-B1	2019			

FRONT SUSPENSION - DAMPER UPGRADE CHART

Charger 2.1 Upgrade Kits						
Fork		MODEL	YEAR	Max Travel	Upgrade Kit	Description
ZEB	R	FS-ZEB-R-A1	2021	190mm	00.4318.048.000	AM UPGRADE KIT CHARGER2.1 RC2 ZEB A1
	SELECT	FS-ZEB-SEL-A1	2021			
	SELECT PLUS	FS-ZEB-SELP-A1	2021			
	ULTIMATE	FS-ZEB-ULT-A1	2021			

Charger Upgrade Kits						
Fork		MODEL	YEAR	Max Travel	Upgrade Kit	Description
BoXXer	RC	FS-BXR-RC-A1	2012	200mm	00.4018.783.000	AM UPGRADE KIT CHARGER BOXXER
		FS-BXR-RC-A2	2013-2014			
		FS-BXR-RC-B1	2015-2017			
		FS-BXR-RC-B2	2018-2019			
	R2C2	FS-BXR-R2C2-A1	2012			
		FS-BXR-R2C2-A2	2013-2014			
	TEAM	FS-BXR-TEAM-A1	2015-2017			
		FS-BXR-TEAM-A2	2018-2019			
	WORLD CUP	FS-BXR-WC-A1	2012			
		FS-BXR-WC-A2	2013-2014			
		FS-BXR-WC-B1	2015-2017			
		FS-BXR-WC-B2	2018-2019			

Charger 2.1 Upgrade Kits						
Fork		MODEL	YEAR	Max Travel	Upgrade Kit	Description
BoXXer	RC	FS-BXR-RC-C1	2019	200mm	00.4020.171.000	AM UPGRADE KIT CHARGER2.1RC2BXR 27/29
	WORLD CUP	FS-BXR-WC-C1	2019			
	SELECT	FS-BXR-SEL-C2	2020-2021			
	ULTIMATE	FS-BXR-ULT-C2	2020-2021			

FRONT SUSPENSION - SPRING UPGRADE CHART

100mm Max Travel

DebonAir Upgrade kits - 32mm Chassis

Fork		MODEL	YEAR	Max Travel	Upgrade Kit	Description
SID	RLC	FS-SID-RLC-A1	2017	100mm	11.4018.096.001	DB SEALHEAD RED SID B4 (0W30 OIL)
		FS-SID-RLC-A2	2018			
		FS-SID-RLC-B1	2019			
	RL	FS-SID-RL-B1	2017			
		FS-SID-RL-B2	2018			
		FS-SID-RL-B3	2019			
	XX	FS-SID-XX-B1	2017			
		FS-SID-XX-B2	2018			
		FS-SID-XX-B3	2019			
	WORLD CUP	FS-SID-WC-B1	2017			
		FS-SID-WC-B2	2018			
		FS-SID-WC-B3	2019			
	SELECT	FS-SID-SEL-B4	2020			
	SELECT PLUS	FS-SID-SELP-B4	2020			
	ULTIMATE	FS-SID-ULT-B4	2020			
SID SL	SELECT	FS-SIDS-SEL-C1	2021	100MM	11.4018.096.004	DB SEALHEAD ASSY SID SL 32 C1
	SELECT PLUS	FS-SIDS-SELP-C1	2021			
	ULTIMATE	FS-SIDS-ULT-C1	2021			
Reba	RL	FS-RBA-RL-A7	2018	100MM	11.4018.096.002	DB SEALHEAD RBA/BLUTO/SID (15WT OIL)
		FS-RBA-RL-A8	2019-2020			
		FS-RBA-RL-A9	2021			

120mm Max travel

DebonAir Upgrade kits - 32mm Chassis

Fork		MODEL	YEAR	Max Travel	Upgrade Kit	Description
SID	RL	FS-SID-RL-A2	2013	120mm	11.4018.096.002	DB SEALHEAD RBA/BLUTO/SID (15WT OIL)
		FS-SID-RL-A3	2014-2015			
		FS-SID-RL-A4	2016			
		FS-SID-RL-B3	2019			
	RLT	FS-SID-RLT-A2	2013			
		FS-SID-RLT-A3	2014-2015			
		FS-SID-RLT-A4	2016			
	RLC	FS-SID-RLC-B1	2019			
	RCT3	FS-SID-RCT3-A2	2013			
		FS-SID-RCT3-A3	2014-2015			
		FS-SID-RCT3-A4	2016			
	XX	FS-SID-XX-A2	2013			
		FS-SID-XX-A3	2014-2015			
		FS-SID-XX-A4	2016			
	WORLD CUP	FS-SID-WC-A2	2013			
		FS-SID-WC-A3	2014-2015			
		FS-SID-WC-A4	2016			
	XX WORLD CUP	FS-SID-XXWC-A2	2013			
		FS-SID-XXWC-A3	2014-2015			
		FS-SID-XXWC-A4	2016			
Reba	RL	FS-REBA-RL-A2	2013			
		FS-REBA-RL-A3	2014			
		FS-REBA-RL-A4	2015			
		FS-REBA-RL-A5	2016			
		FS-REBA-RL-A6	2017			
		FS-REBA-RL-A7	2018			
		FS-REBA-RL-A8	2019-2020			
		FS-REBA-RL-A9	2021			
	RLT	FS-REBA-RLT-A2	2013			
		FS-REBA-RLT-A3	2014			
		FS-REBA-RLT-A4	2015			
		FS-REBA-RLT-A5	2016-2017			
Bluto	RL	FS-BLTO-RL-A1	2015			
		FS-BLTO-RL-A2	2016			
		FS-BLTO-RL-A3	2017-2018			
		FS-BLTO-RL-A4	2019-2021			
	RCT3	FS-BLTO-RCT3-A2	2016			
		FS-BLTO-RCT3-A3	2017-2018			

FRONT SUSPENSION - SPRING UPGRADE CHART

DebonAir Upgrade kits - 35mm Chassis

Fork		MODEL	YEAR	Max Travel	Upgrade Kit	Description
SID	SELECT	FS-SID-SEL-C1	2021	120mm	11.4018.096.003	DB SEALHEAD ASSY SID 35 C1
	SELECT PLUS	FS-SID-SELP-C1	2021			
	ULTIMATE	FS-SID-ULT-C1	2021			

DebonAir C1 Upgrade kits

Fork		MODEL	YEAR	Max Travel	Upgrade Kit	Description
Pike	RC	FS-PIKE-RC-A1	2014-2015	160mm	00.4019.931.005	AM UPGR DB PIKE 16029
					00.4019.931.006	AM UPGR DB PIKE 15029
		FS-PIKE-RC-A2	2016-2017		00.4019.931.007	AM UPGR DB PIKE 14029 16027
					00.4019.931.008	AM UPGR DB PIKE 13029 15027 16026
	RCT3	FS-PIKE-RCT3-A1	2014-2015		00.4019.931.009	AM UPGR DB PIKE 12029 14027 15026
					00.4019.931.010	AM UPGR DB PIKE 13027 14026
		FS-PIKE-RCT3-A2	2016-2017		00.4019.931.011	AM UPGR DB PIKE 12027 13026
					00.4019.931.012	AM UPGR DB PIKE 12026
	RC	FS-PIKE-RC-B1	2018	160mm	00.4020.552.000	AM UPGR DB C1 PIKE B1/RVL- 160
					00.4020.552.001	AM UPGR DB C1 PIKE B1/RVL- 150
	RCT3	FS-PIKE-RCT3-B1	2018		00.4020.552.002	AM UPGR DB C1 PIKE B1/RVL- 140
					00.4020.552.003	AM UPGR DB C1 PIKE B1/RVL- 130
					00.4020.552.004	AM UPGR DB C1 PIKE B1/RVL- 120
	RC	FS-PIKE-RC-B2	2019	160mm	00.4020.552.000	AM UPGR DB C1 PIKE B1/RVL- 160
	RCT3	FS-PIKE-RCT3-B2	2019		00.4020.552.001	AM UPGR DB C1 PIKE B1/RVL- 150
	SELECT	FS-PIKE-SEL-B3	2020		00.4020.552.002	AM UPGR DB C1 PIKE B1/RVL- 140
		FS-PIKE-SEL-B4	2021		00.4020.552.003	AM UPGR DB C1 PIKE B1/RVL- 130
	SELECT PLUS	FS-PIKE-SELP-B3	2020		00.4020.552.004	AM UPGR DB C1 PIKE B1/RVL- 120
		FS-PIKE-SELP-B4	2021		00.4020.573.000	AM UPGR DB C1- 35MM SEAL HEAD
	ULTIMATE	FS-PIKE-ULT-B3	2020			
		FS-PIKE-ULT-B4	2021			
Revelation	RC	FS-RVL-RC-A1	2018	160mm	00.4020.552.000	AM UPGR DB C1 PIKE B1/RVL- 160
					00.4020.552.001	AM UPGR DB C1 PIKE B1/RVL- 150
					00.4020.552.002	AM UPGR DB C1 PIKE B1/RVL- 140
					00.4020.552.003	AM UPGR DB C1 PIKE B1/RVL- 130
					00.4020.552.004	AM UPGR DB C1 PIKE B1/RVL- 120
		FS-RVL-RC-A2	2019-2020	160mm	00.4020.552.000	AM UPGR DB C1 PIKE B1/RVL- 160
					00.4020.552.001	AM UPGR DB C1 PIKE B1/RVL- 150
		FS-RVL-RC-A3	2021		00.4020.552.002	AM UPGR DB C1 PIKE B1/RVL- 140
					00.4020.552.003	AM UPGR DB C1 PIKE B1/RVL- 130
					00.4020.552.004	AM UPGR DB C1 PIKE B1/RVL- 120
	CHARGER	FS-RVL-CHRC-A1	2019		00.4020.573.000	AM UPGR DB C1- 35MM SEAL HEAD

DebonAir C1 Upgrade kits

Fork		MODEL	YEAR	Max Travel	Upgrade Kit	Description
ZEB	R	FS-ZEB-R-A1	2021	190mm		
	SELECT	FS-ZEB-SEL-A1	2021		00.4020.574.001	AM UPGR DB C1 ZEB - 190
					00.4020.574.002	AM UPGR DB C1 ZEB - 180
	SELECT PLUS	FS-ZEB-SELP-A1	2021		00.4020.574.003	AM UPGR DB C1 ZEB - 170
					00.4020.574.004	AM UPGR DB C1 ZEB - 160
	ULTIMATE	FS-ZEB-ULT-A1	2021		00.4020.574.005	AM UPGR DB C1 ZEB - 150

FRONT SUSPENSION - SPRING UPGRADE CHART

DebonAir C1 Upgrade kits

Fork		MODEL	YEAR	Max Travel	Upgrade Kit	Description
Lyrik	RC	FS-LYRK-RC-B1	2016-2017	180mm	00.4020.572.000	AM UPGR DB C1 LYRK/YARI- 180
		FS-LYRK-RC-C1	2018		00.4020.572.001	AM UPGR DB C1 LYRK/YARI- 170
	RCT3	FS-LYRK-RCT3-A1	2016-2017		00.4020.572.002	AM UPGR DB C1 LYRK/YARI- 160
		FS-LYRK-RCT3-B1	2018		00.4020.572.003	AM UPGR DB C1 LYRK/YARI- 150
	RC	FS-LYRK-RC-C2	2019	180mm		
	RCT3	FS-LYRK-RCT3-C1	2019		00.4020.572.000	AM UPGR DB C1 LYRK/YARI- 180
	RC2	FS-LYRK-RC2-C1	2019		00.4020.572.001	AM UPGR DB C1 LYRK/YARI- 170
	SELECT	FS-LYRK-SEL-C2	2020		00.4020.572.002	AM UPGR DB C1 LYRK/YARI- 160
		FS-LYRK-SEL-C3	2021		00.4020.572.003	AM UPGR DB C1 LYRK/YARI- 150
	SELECT PLUS	FS-LYRK-SELP-C2	2020		00.4020.573.000	AM UPGR DB C1- 35MM SEAL HEAD
		FS-LYRK-SELP-C3	2021			
	ULTIMATE	FS-LYRK-ULT-C2	2020			
		FS-LYRK-ULT-C3	2021			
Yari	RC	FS-YARI-RC-A1	2016-2017	180mm	00.4020.572.000	AM UPGR DB C1 LYRK/YARI- 180
					00.4020.572.001	AM UPGR DB C1 LYRK/YARI- 170
					00.4020.572.002	AM UPGR DB C1 LYRK/YARI- 160
					00.4020.572.003	AM UPGR DB C1 LYRK/YARI- 150
		FS-YARI-RC-B1	2018		00.4020.572.004	AM UPGR DB C1 YARI- 140
					00.4020.572.005	AM UPGR DB C1 YARI- 130
					00.4020.572.006	AM UPGR DB C1 YARI- 120
		FS-YARI-RC-B2	2019-2020	180mm	00.4020.572.000	AM UPGR DB C1 LYRK/YARI- 180
					00.4020.572.001	AM UPGR DB C1 LYRK/YARI- 170
					00.4020.572.002	AM UPGR DB C1 LYRK/YARI- 160
					00.4020.572.003	AM UPGR DB C1 LYRK/YARI- 150
		FS-YARI-RC-B3	2021		00.4020.572.004	AM UPGR DB C1 YARI- 140
					00.4020.572.005	AM UPGR DB C1 YARI- 130
					00.4020.572.006	AM UPGR DB C1 YARI- 120
	CHARGER	FS-YARI-CHRC-B1	2019		00.4020.573.000	AM UPGR DB C1- 35MM SEAL HEAD

DebonAir Upgrade kits

Fork		MODEL	YEAR	Max Travel	Upgrade Kit	Description
BoXXer	RC	FS-BXR-RC-C1	2019	200mm		
	WORLD CUP	FS-BXR-WC-C1	2019		00.4019.933.000	AM UPGRADE KIT DEBONAIR BXR 200 C1
	SELECT	FS-BXR-SEL-C2	2020-2021		00.4019.933.001	AM UPGRADE KIT DEBONAIR BXR 190 C1
	ULTIMATE	FS-BXR-ULT-C2	2020-2021		00.4019.933.002	AM UPGRADE KIT DEBONAIR BXR 180 C1

REAR SUSPENSION - AIR CAN UPGRADE CHART

Monarch DebonAir Upgrade kits

Fork		MODEL	YEAR	Upgrade Kit	Description
Monarch	R	RS-MNR-R-C1	2014		
		RS-MNR-R-C2	2015		
		RS-MNR-R-C3	2016-2018		
		RS-MNR-R-C4	2019-2021		
	RL	RS-MNR-RL-B1	2014		
		RS-MNR-RL-C1	2015		
		RS-MNR-RL-C2	2016-2018		
		RS-MNR-RL-C3	2019-2021		
	RT	RS-MNR-RT-C1	2014	00.4018.783.004	AM UPGRADE KIT DEBONAIR 165X38
		RS-MNR-RT-D1	2015	00.4018.783.005	AM UPGRADE KIT DEBONAIR 184X44AM
		RS-MNR-RT-D2	2016-2018	00.4018.783.006	AM UPGRADE KIT DEBONAIR 190/200X51
		RS-MNR-RT-D3	2019-2021	00.4018.783.007	AM UPGRADE KIT DEBONAIR 200X57
	RT3	RS-MNR-RT3-C1	2014	00.4018.783.008	AM UPGRADE KIT DEBONAIR 216X63
		RS-MNR-RT3-C2	2015		
		RS-MNR-RT3-D1	2016-2018		
		RS-MNR-RT3-D2	2019-2021		
	XX	RS-MNR-XX-B1	2014		
		RS-MNR-XX-C1	2015		
		RS-MNR-XX-C2	2016-2018		
Monarch Plus	R	RS-MNRP-R-B1	2014		
		RS-MNRP-R-B2	2015		
		RS-MNRP-R-B3	2016-2018		
		RS-MNRP-R-B4	2019-2021		
	RC3	RS-MNRP-RC3-B1	2014		
		RS-MNRP-RC3-B2	2015		
		RS-MNRP-RC3-B3	2016-2018		
		RS-MNRP-RC3-B4	2019-2021		

Deluxe/Super Deluxe DebonAir Upgrade kits

Fork		MODEL	YEAR	Upgrade Kit	Description
Deluxe	R	RS-DLX-R-A1	2017		
		RS-DLX-R-A2	2018		
		RS-DLX-R-B1	2019		
	RL	RS-DLX-RL-A1	2017		
		RS-DLX-RL-A2	2018		
		RS-DLX-RL-B1	2019		
	RLR	RS-DLX-RLR-A1	2018		
		RS-DLX-RLR-B1	2019		
	RT	RS-DLX-RT-A1	2017		
		RS-DLX-RT-A2	2018		
		RS-DLX-RT-B1	2019		
	RT3	RS-DLX-RT3-A1	2017		
		RS-DLX-RT3-A2	2018		
		RS-DLX-RT3-B1	2019		
	SELECT	RS-DLX-SEL-B2	2020-2021		
	SELECT PLUS	RS-DLX-SELP-B2	2020-2021	11.4118.059.000	AIR CAN DB V2 DLX/SDLX 37.5-45MM
	ULTIMATE	RS-DLX-ULTR-B2	2020-2021	11.4118.059.001	AIR CAN DB V2 DLX/SDLX 47.5-55MM
		RS-DLX-ULTR-B2	2020-2021	11.4118.059.002	AIR CAN DB V2 DLX/SDLX 57.5-65MM
Super Deluxe	R	RS-SDLX-R-A1	2017	11.4118.059.003	AIR CAN DB V2 DLX/SDLX 67.5-75MM
		RS-SDLX-R-A2	2018		
		RS-SDLX-R-B1	2019		
	RC	RS-SDLX-RC-A1	2018		
		RS-SDLX-RC-B1	2019		
	RC3	RS-SDLX-RC3-A1	2017		
		RS-SDLX-RC3-A2	2018		
		RS-SDLX-RC3-B1	2019		
	RCT	RS-SDLX-RCT-A1	2018		
		RS-SDLX-RCT-B1	2019		
	RTR	RS-SDLX-RTR-A1	2018		
		RS-SDLX-RTR-B1	2019		
	SELECT	RS-SDLX-SEL-B2	2020-2021		
	SELECT PLUS	RS-SDLX-SELP-B2	2020-2021		
	ULTIMATE	RS-SDLX-ULDH-B2	2020-2021		
		RS-SDLX-ULT-B2	2020-2021		
		RS-SDLX-ULTR-B2	2020-2021		

REAR SUSPENSION - AIR CAN UPGRADE CHART

Sid Luxe DebonAir Upgrade kits					
Fork		MODEL	YEAR	Upgrade Kit	Description
SID LUXE	Select Plus	RS-SIDL-SELP-A1	2021	11.4118.059.004	AIR CAN DB SID LUXE 27.5-35MM
	Ultimate	RS-SIDL-ULT-A1	2021	11.4118.059.005	AIR CAN DB SID LUXE 37.5-45MM
				11.4118.059.006	AIR CAN DB SID LUXE 47.5-50MM

Deluxe/Super Deluxe MegNeg Upgrade Kits					
Fork		MODEL	YEAR	Upgrade Kit	Description
Deluxe	R	RS-DLX-R-A1	2017		
		RS-DLX-R-A2	2018		
		RS-DLX-R-B1	2019		
	RL	RS-DLX-RL-A1	2017		
		RS-DLX-RL-A2	2018		
		RS-DLX-RL-B1	2019		
	RLR	RS-DLX-RLR-A1	2018		
		RS-DLX-RLR-B1	2019		
	RT	RS-DLX-RT-A1	2017		
		RS-DLX-RT-A2	2018		
		RS-DLX-RT-B1	2019		
	RT3	RS-DLX-RT3-A1	2017		
		RS-DLX-RT3-A2	2018		
		RS-DLX-RT3-B1	2019		
	SELECT	RS-DLX-SEL-B2	2020-2021		
	SELECT PLUS	RS-DLX-SELP-B2	2020-2021	00.4318.028.000	AM UPGRADE KIT MEGNEG 47.5-55MM
	ULTIMATE	RS-DLX-ULTR-B2	2020-2021	00.4318.028.001	AM UPGRADE KIT MEGNEG 57.5-65MM
		RS-DLX-ULTR-B2	2020-2021	00.4318.028.002	AM UPGRADE KIT MEGNEG 67.5-75MM
Super Deluxe	R	RS-SDLX-R-A1	2017		
		RS-SDLX-R-A2	2018		
		RS-SDLX-R-B1	2019		
	RC	RS-SDLX-RC-A1	2018		
		RS-SDLX-RC-B1	2019		
	RC3	RS-SDLX-RC3-A1	2017		
		RS-SDLX-RC3-A2	2018		
		RS-SDLX-RC3-B1	2019		
	RCT	RS-SDLX-RCT-A1	2018		
		RS-SDLX-RCT-B1	2019		
	RTR	RS-SDLX-RTR-A1	2018		
		RS-SDLX-RTR-B1	2019		
	SELECT	RS-SDLX-SEL-B2	2020-2021		
	SELECT PLUS	RS-SDLX-SELP-B2	2020-2021		
	ULTIMATE	RS-SDLX-ULDH-B2	2020-2021		
		RS-SDLX-ULT-B2	2020-2021		
		RS-SDLX-ULTR-B2	2020-2021		

COPYRIGHT
This publication includes trademarks and registered trademarks of SRAM LLC designated by the symbols ™ and ®, respectively.

Copyright © 2020 SRAM LLC

WORLD HEADQUARTERS
SRAM, LLC
1000 West Fulton Market
4th Floor
Chicago, Illinois 60607 USA
Dealers: +1-800-346-2928
Tel: +1-312-664-8800
Fax: +1-312-664-8826

EUROPEAN HEADQUARTERS
SRAM EUROPE SALES & SERVICES BV
Paasbosweg 14-16
3862ZS Nijkerk
The Netherlands
Tel: +31-33-4506060
Fax: +31-33-4570200

ASIAN HEADQUARTERS
SRAM TAIWAN
No. 1598-8 Chung Shan Road
Shen Kang Hsiang, Taichung
County 429
Taiwan R.O.C.
Tel: +886-4-2521-3688
Fax: +886-4-2561-3686

SRAM.COM